MacLeod, Mary Alexandra (1999) *Viking age urbanism in Scandinavia and the Danelaw : a consideration of Birka and York.*
PhD thesis.

http://theses.gla.ac.uk/2536/

Copyright and moral rights for this thesis are retained by the author

A copy can be downloaded for personal non-commercial research or study, without prior permission or charge

This thesis cannot be reproduced or quoted extensively from without first obtaining permission in writing from the Author

The content must not be changed in any way or sold commercially in any format or medium without the formal permission of the Author

When referring to this work, full bibliographic details including the author, title, awarding institution and date of the thesis must be given

Glasgow Theses Service
http://theses.gla.ac.uk/
theses@gla.ac.uk

VIKING AGE URBANISM IN SCANDINAVIA AND THE DANELAW: A CONSIDERATION OF BIRKA AND YORK

2 volumes

Volume 2, illustrations and appendices

Mary Alexandra MacLeod

PhD thesis

Department of Archaeology
Faculty of Arts
University of Glasgow

June 1999

BEST COPY

AVAILABLE

Variable print quality

TEXT BOUND INTO

THE SPINE

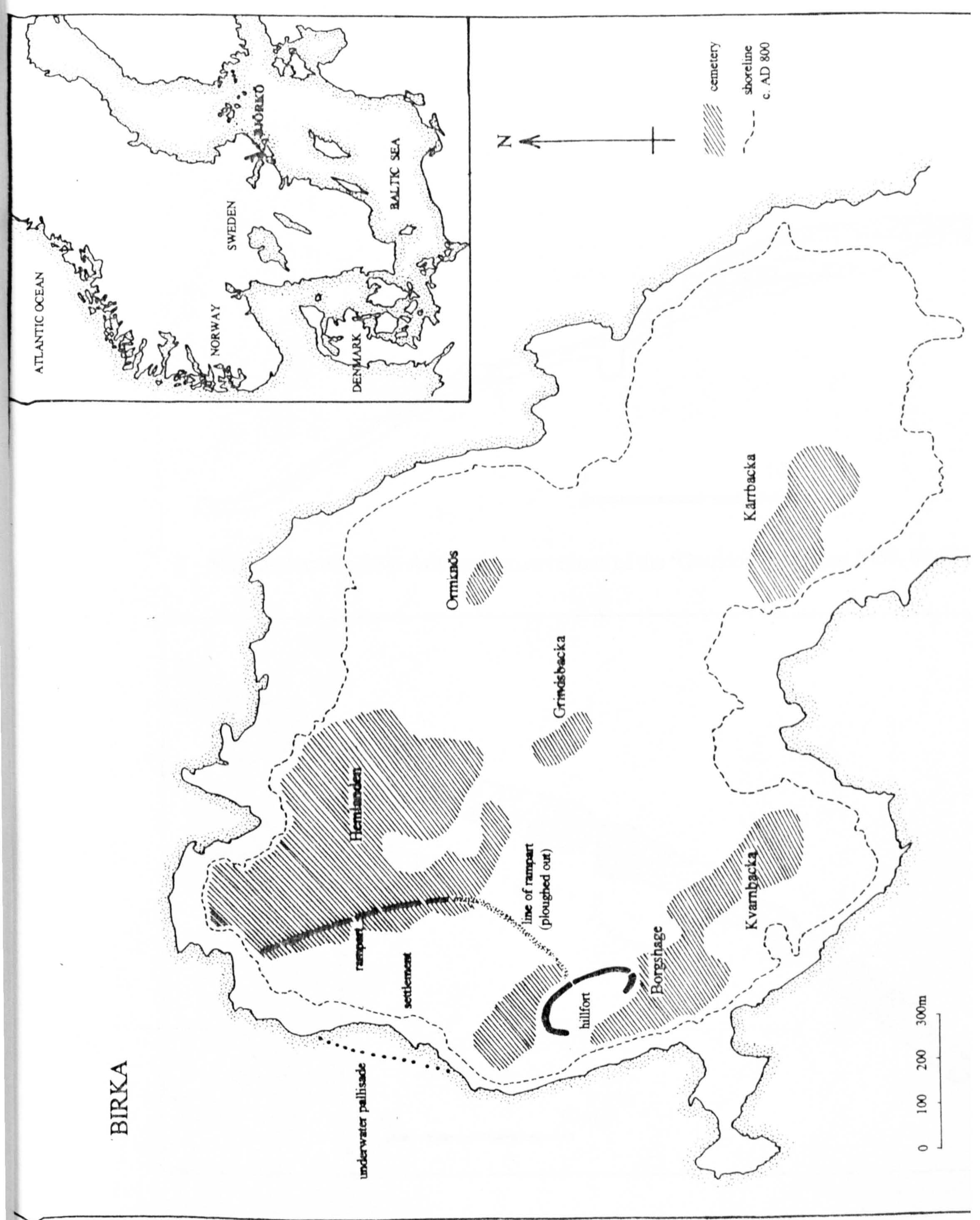

1 – Location map of Birka

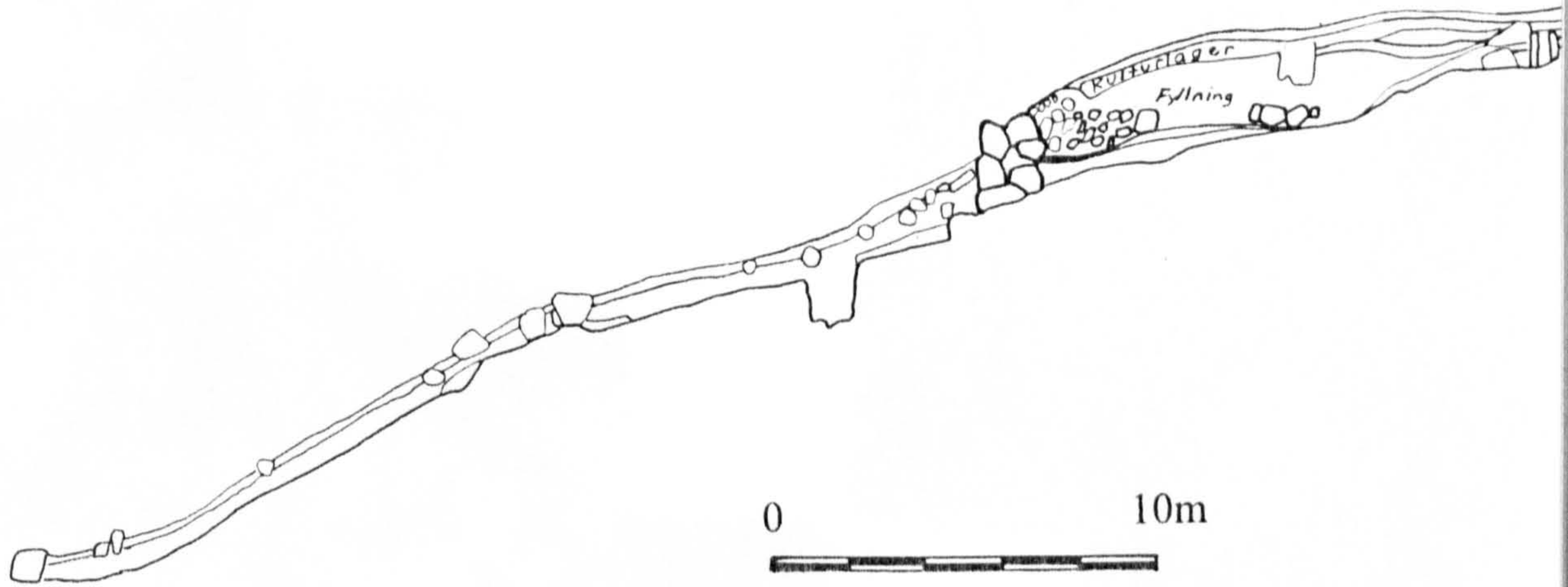

2 – Section drawing from Arbman's excavations of the 'Garrison' (Arbman 1939, 64-65)

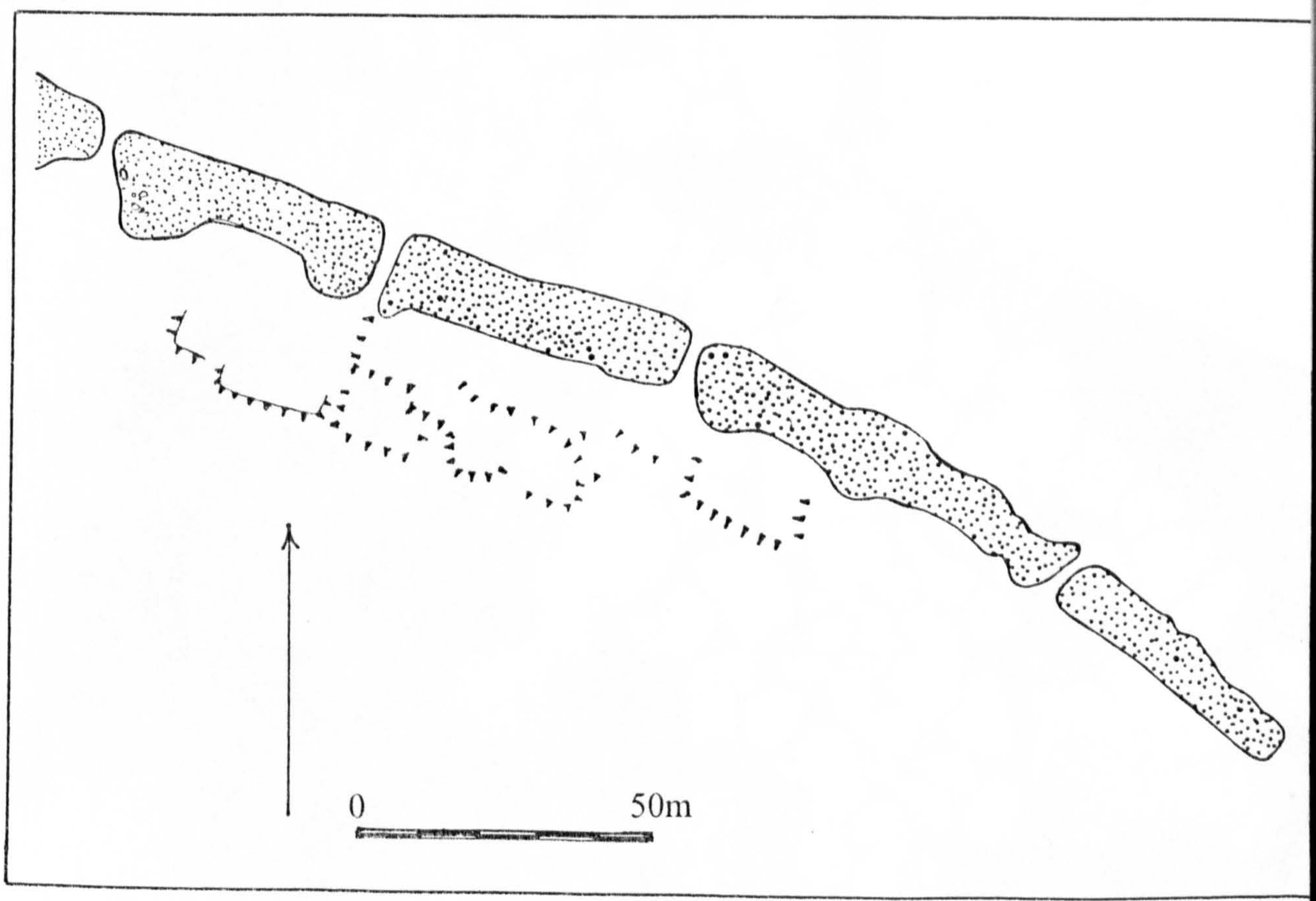

3 – Terraces, rampart (Arbman 1943)

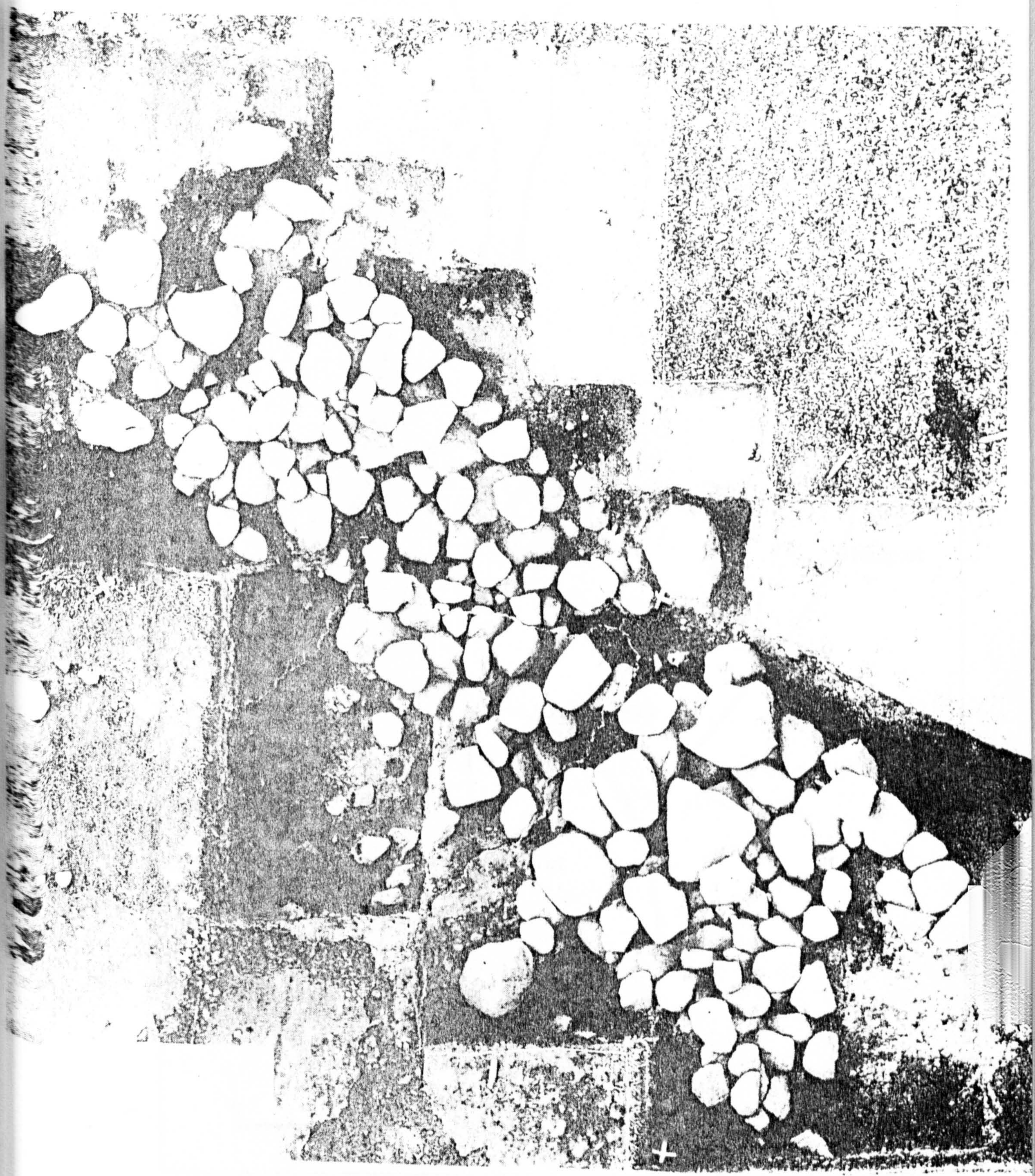

4 – 10th C. jetty from 1969-71 excavations in Birka (Ambrosiani *et al.* 1973, fig. 5)

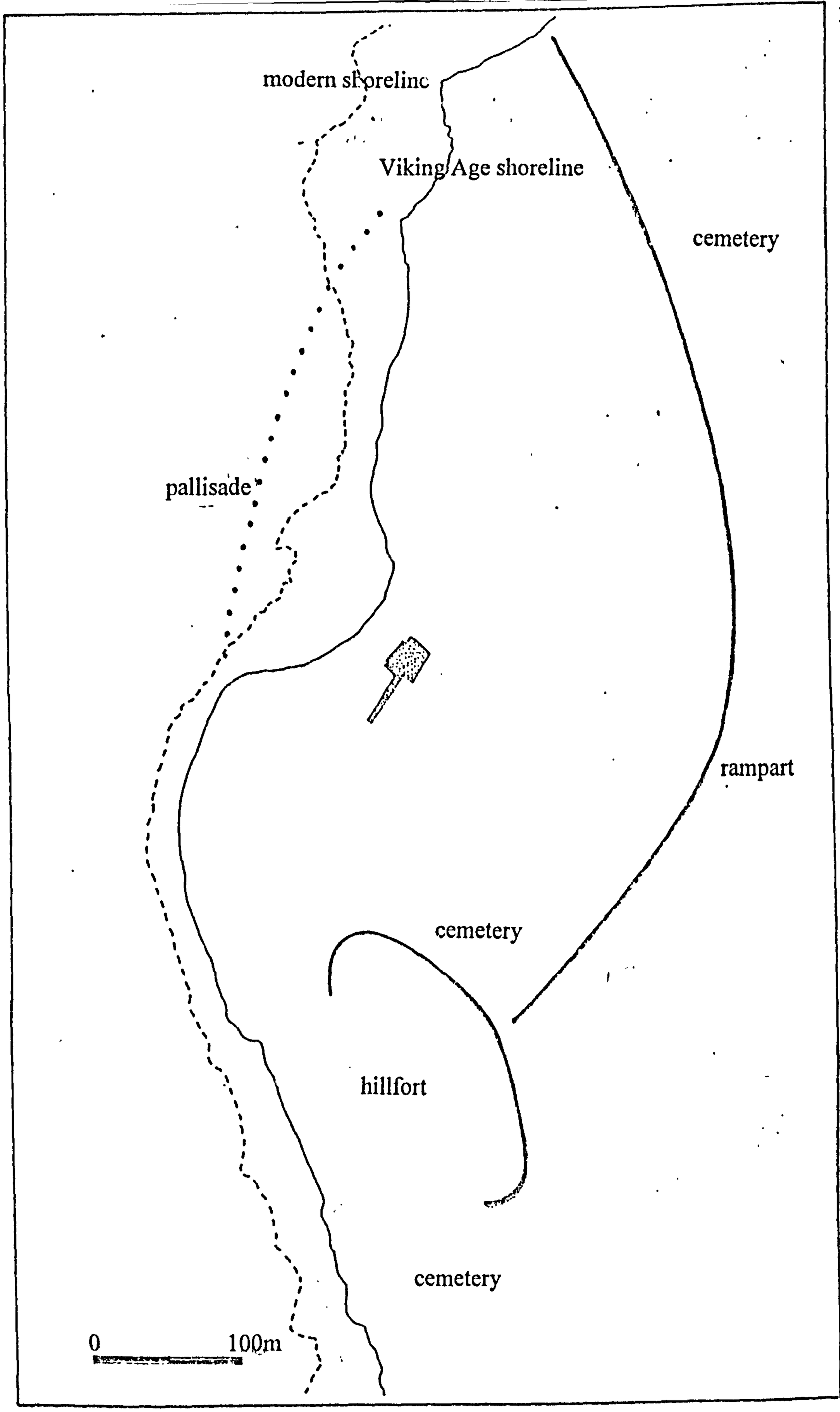

5 – Location map of 1990-1995 excavations at Birka

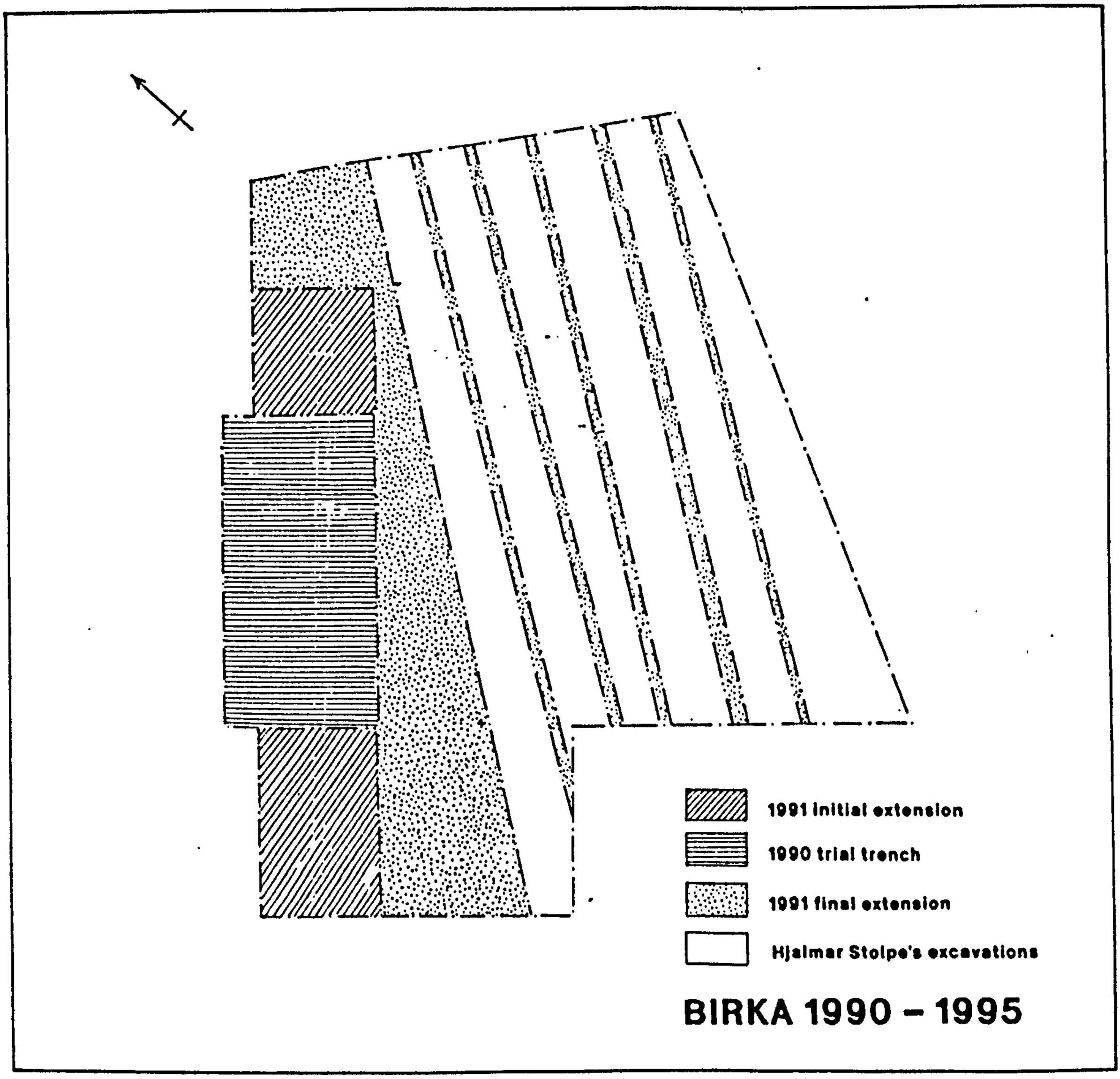

6 – Sequence of excavation areas 1990-1995 at Birka

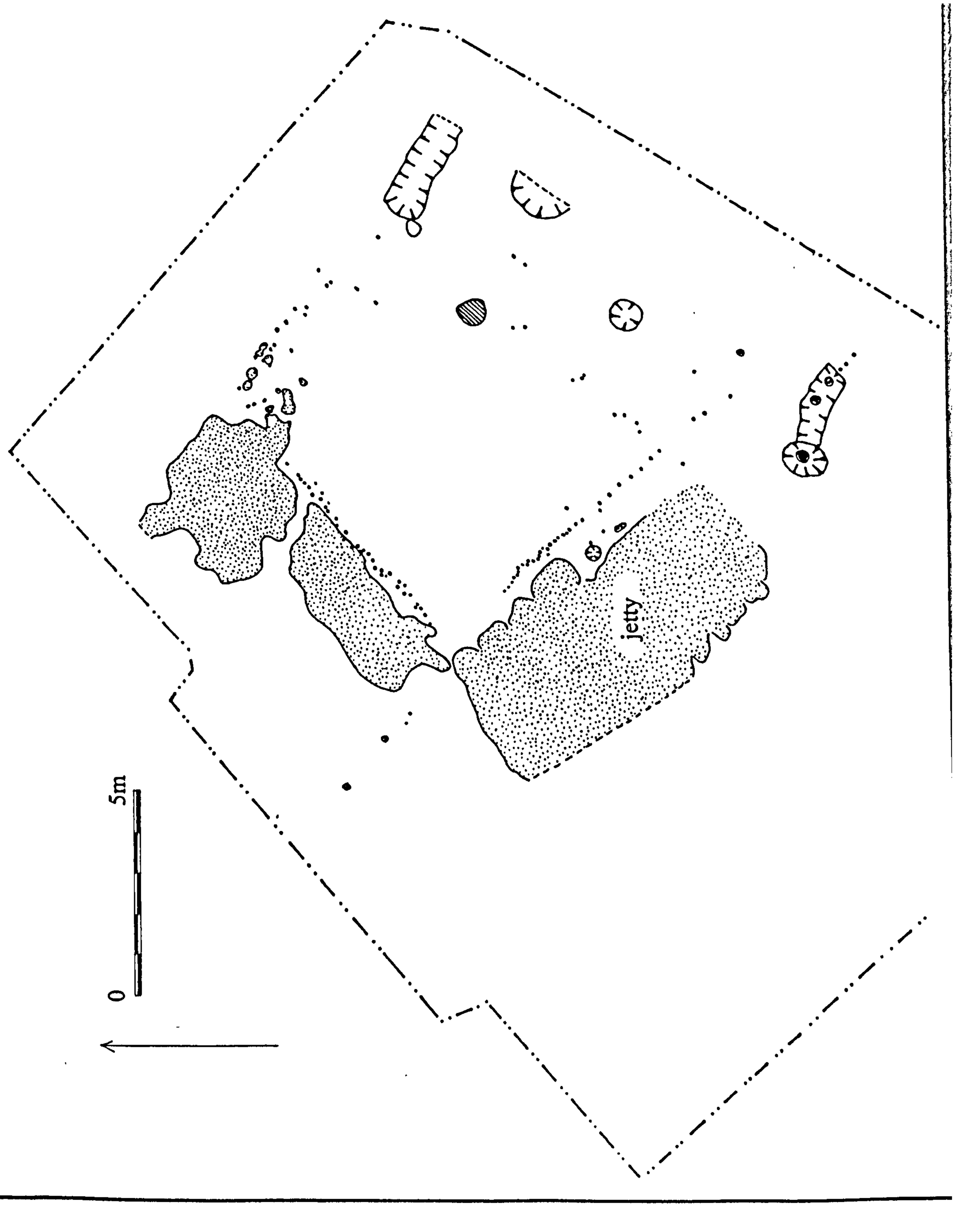

7 – Period B1, Birka 1990-1995

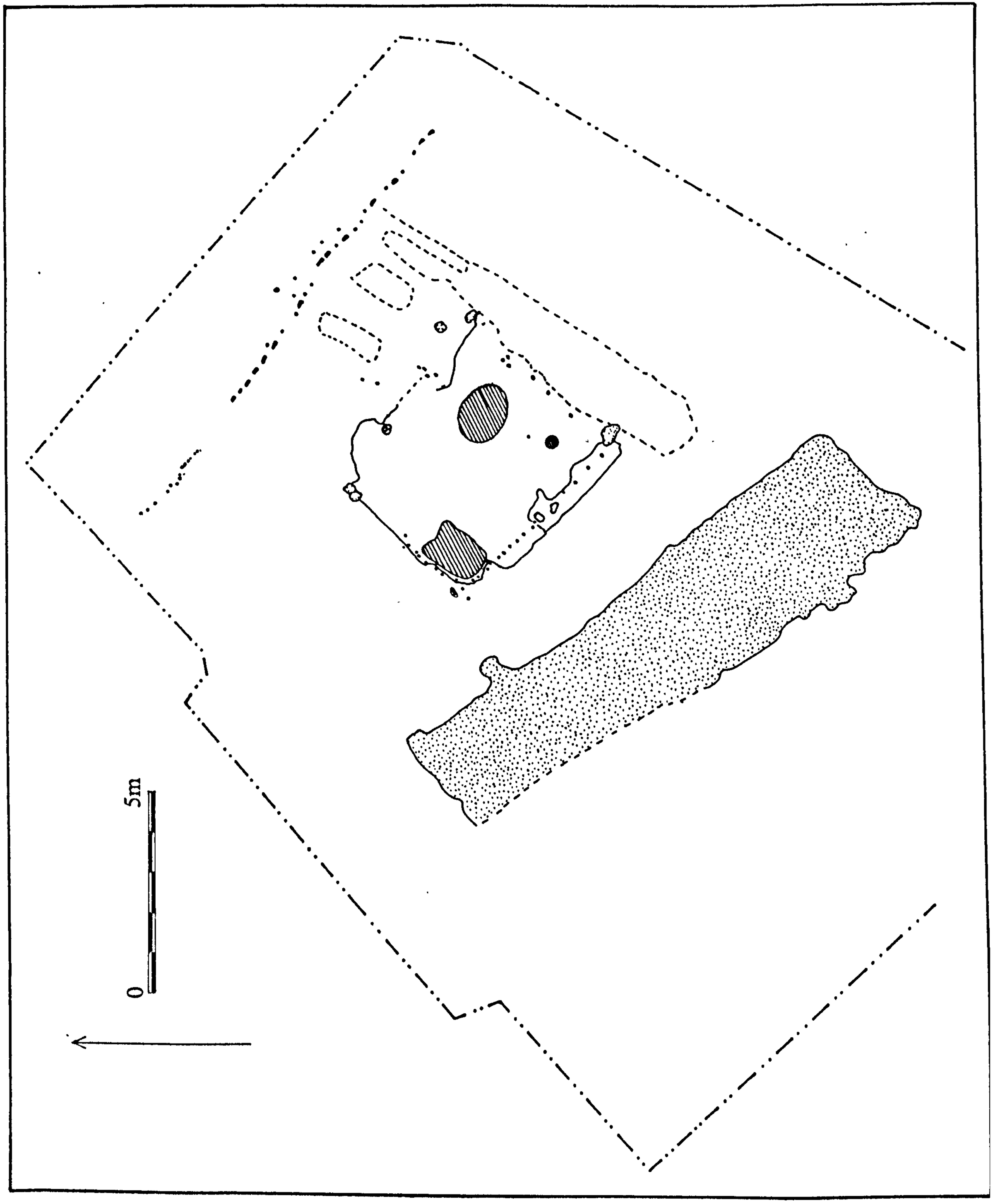

8 – Period B2, Birka 1990-1995

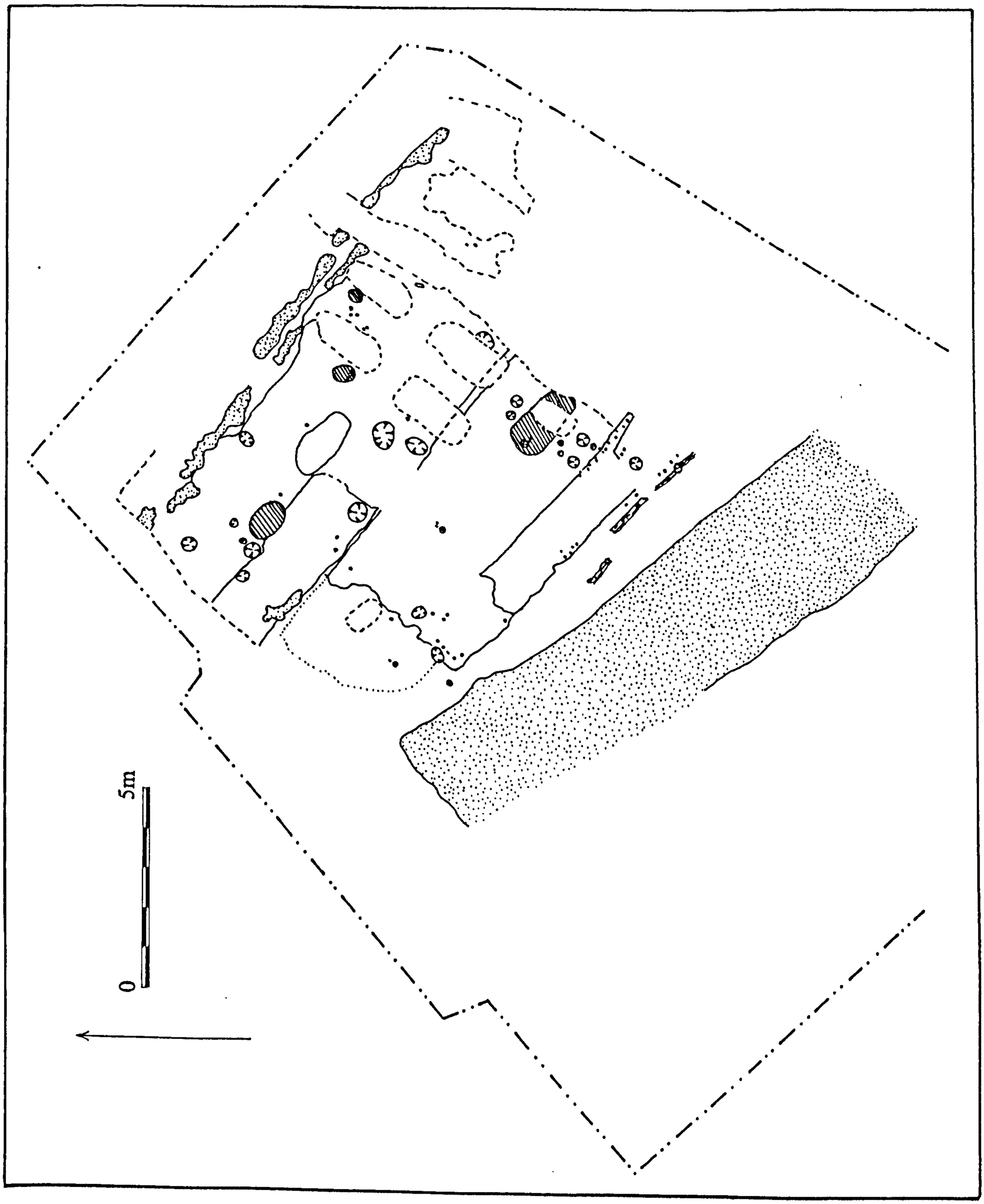

9 – Period B3, Birka 1990-1995

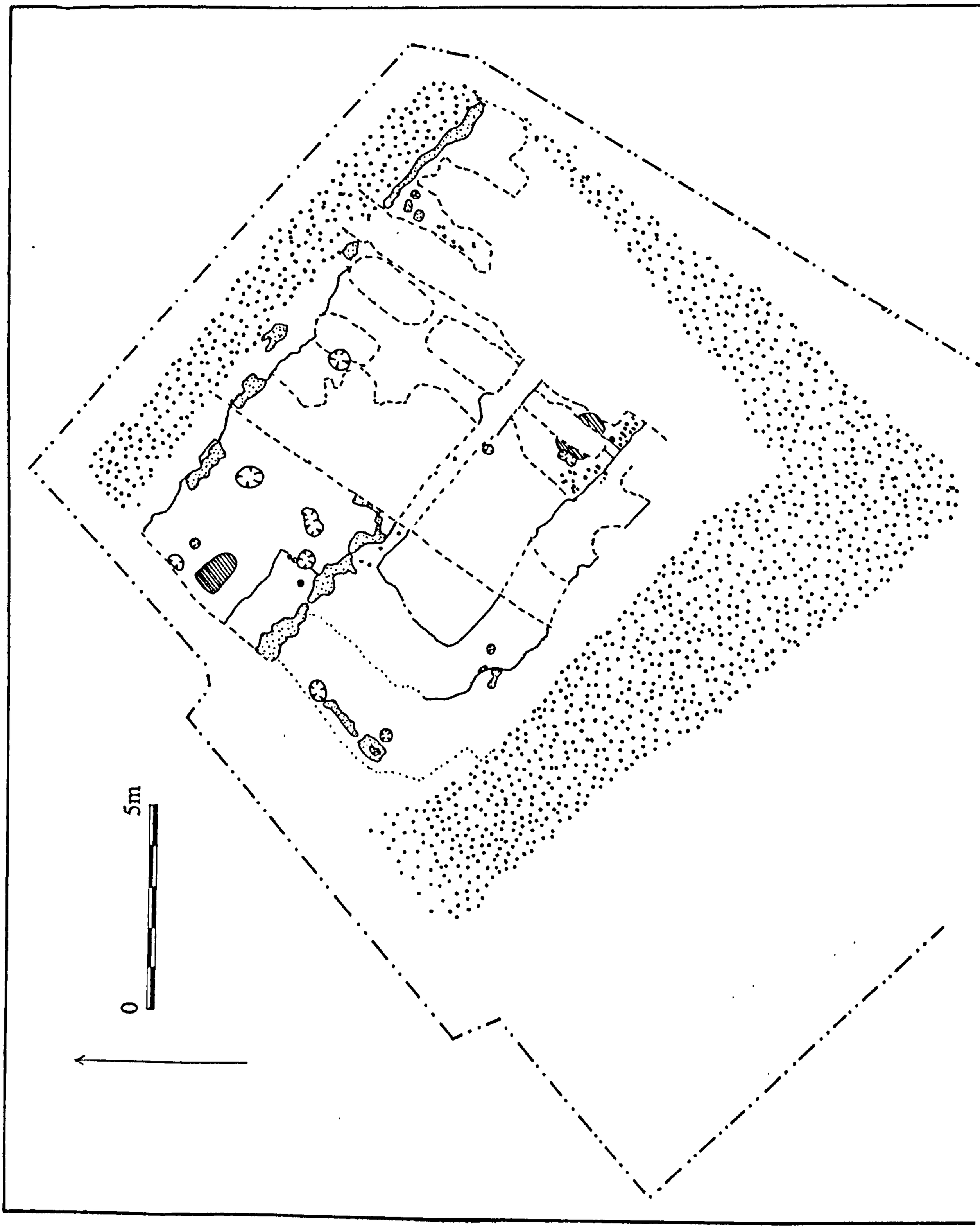

10 – Period B4, Birka 1990-1995

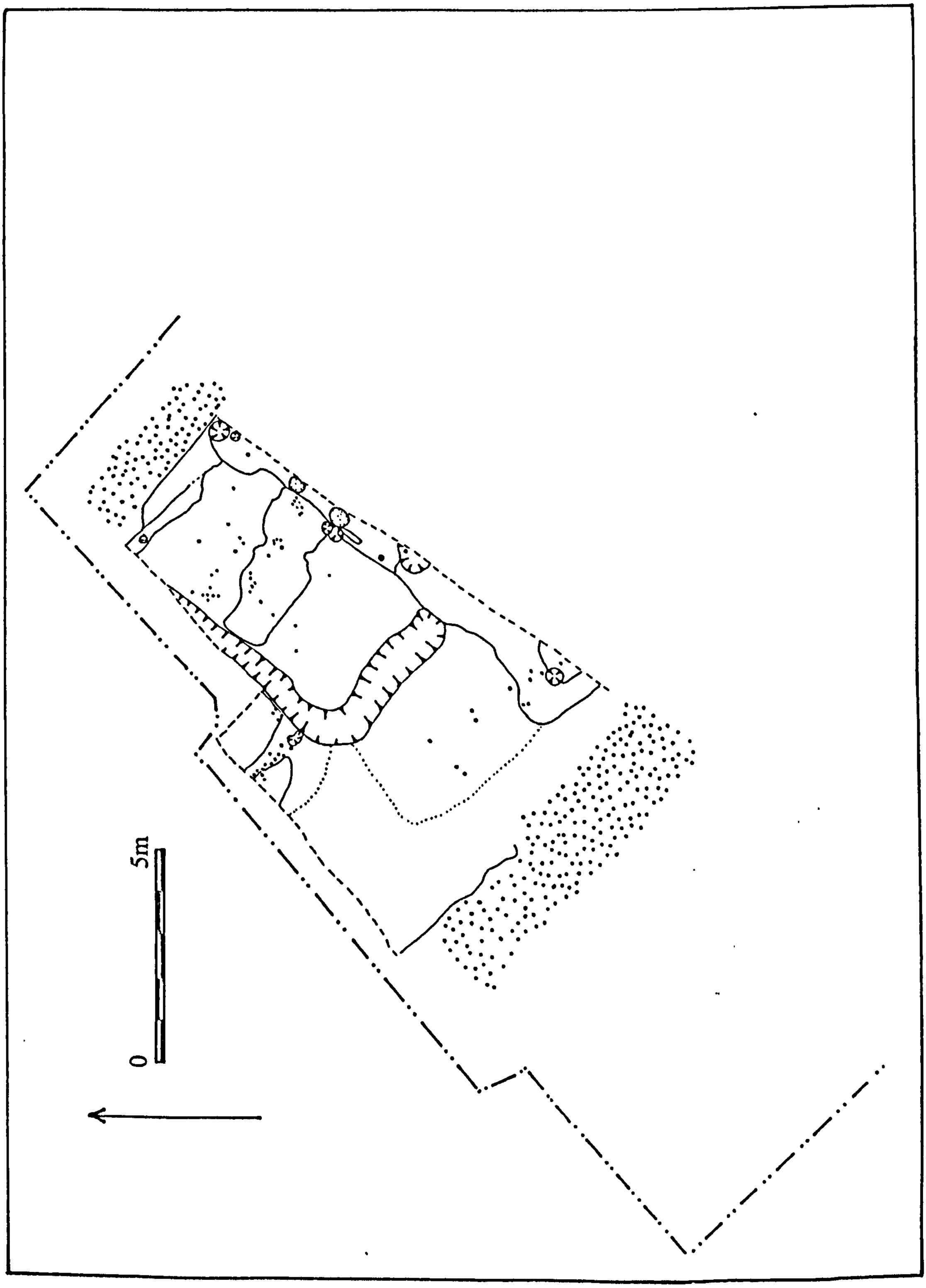

11 – Period B5, Birka 1990-1995

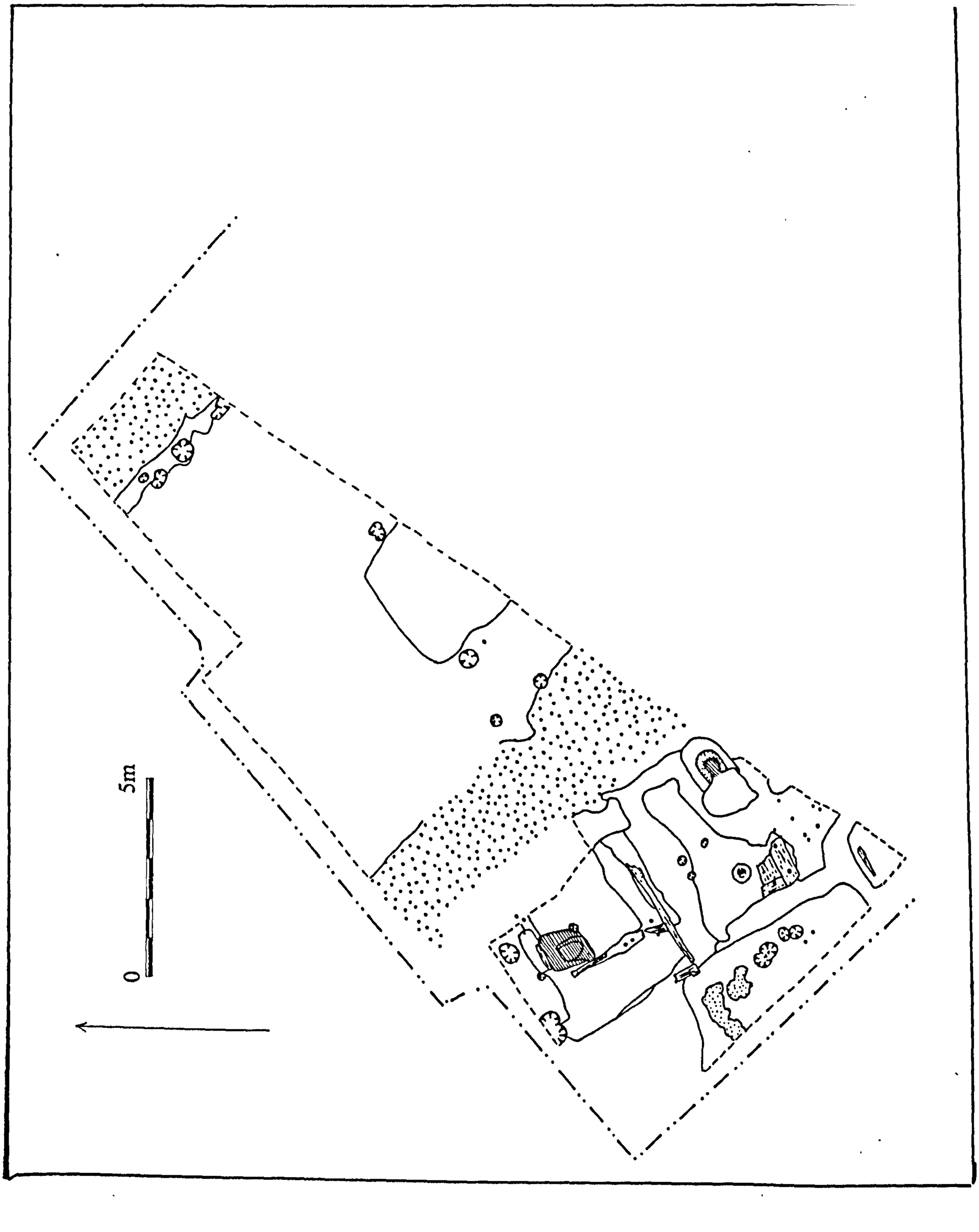

12 – Period B6, Birka 1990-1995

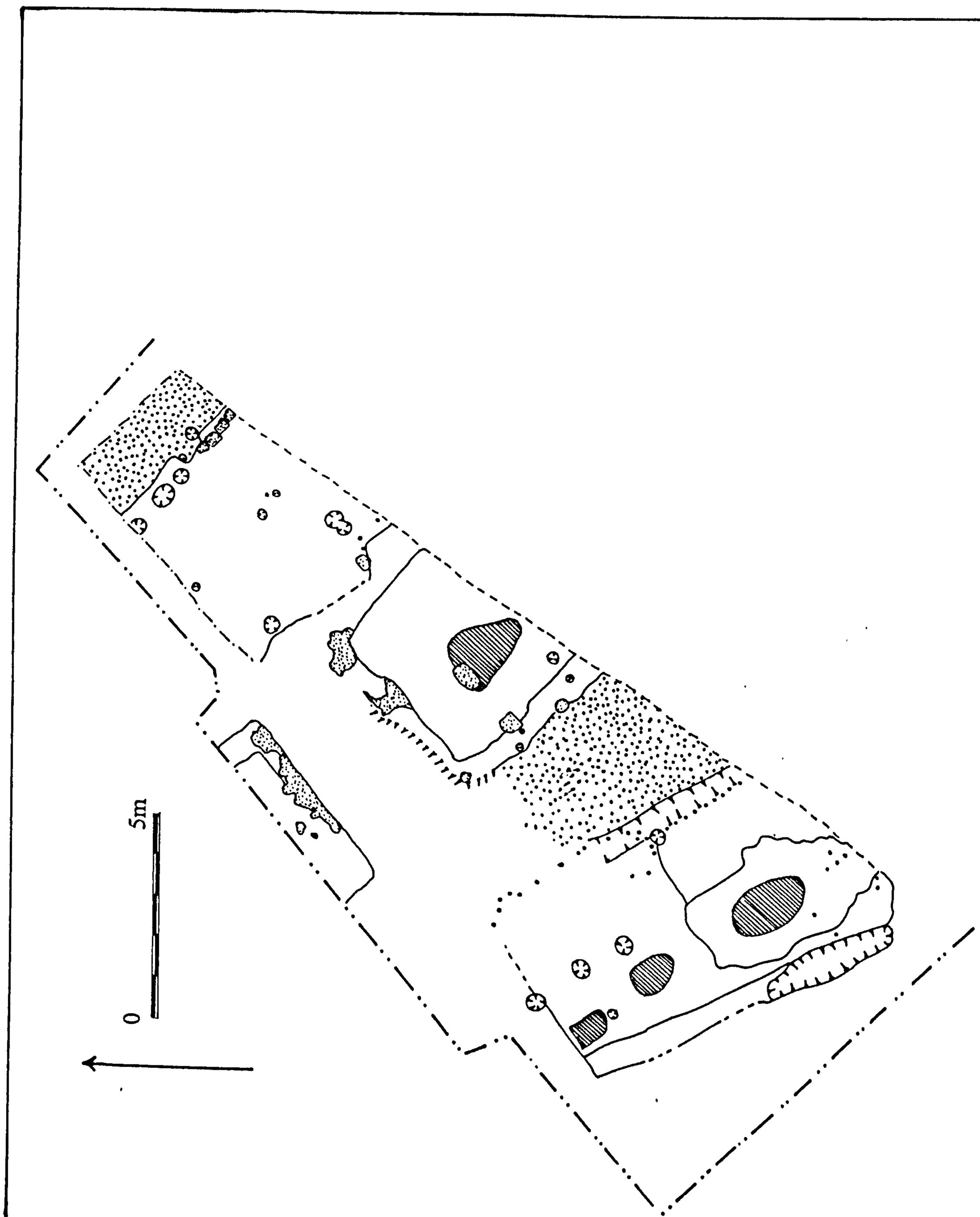

13 – Period B7, Birka 1990-1995

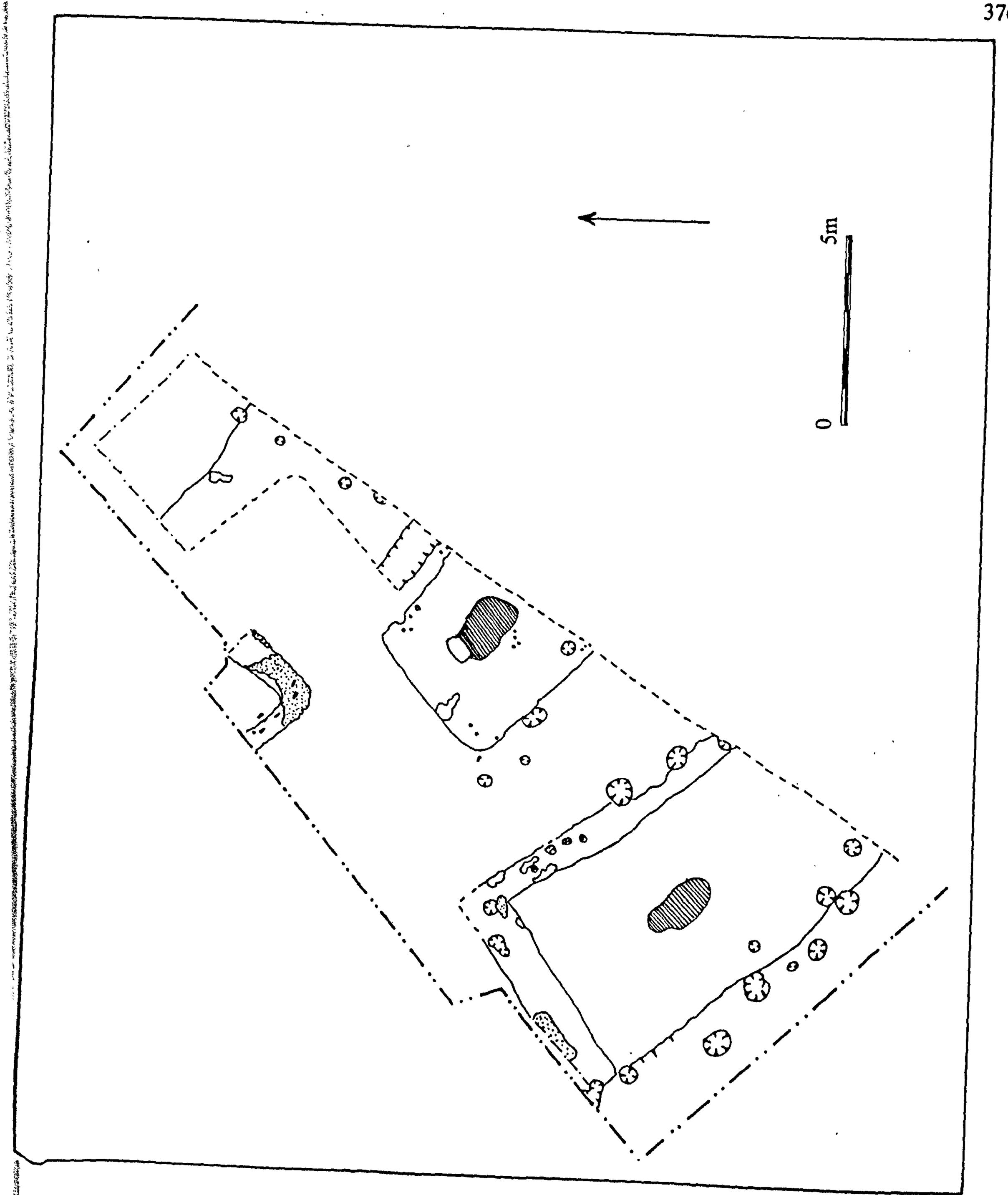

14 – Period B8, Birka 1990-1995

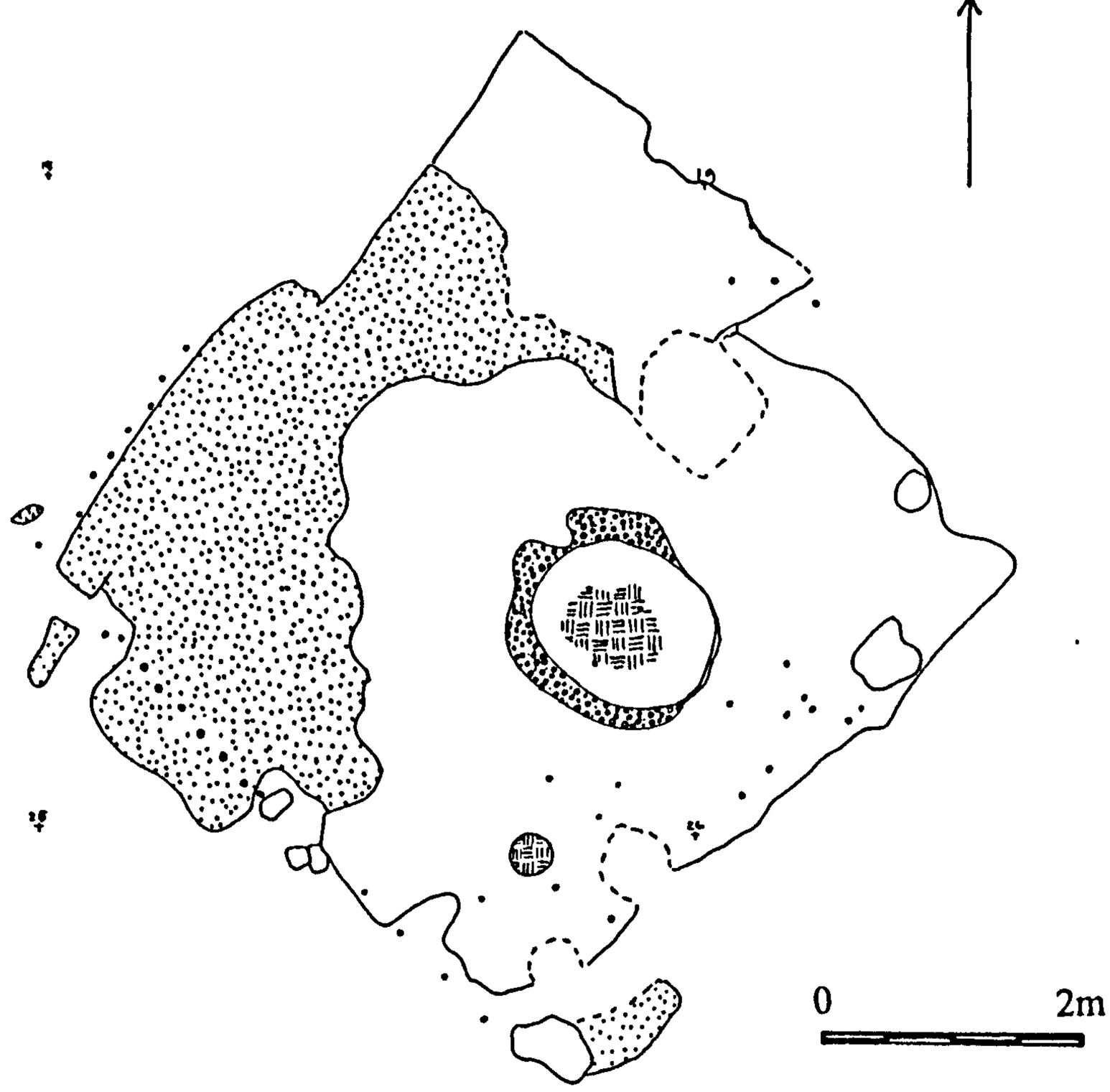

15 – Building 1, Birka 1990-1995

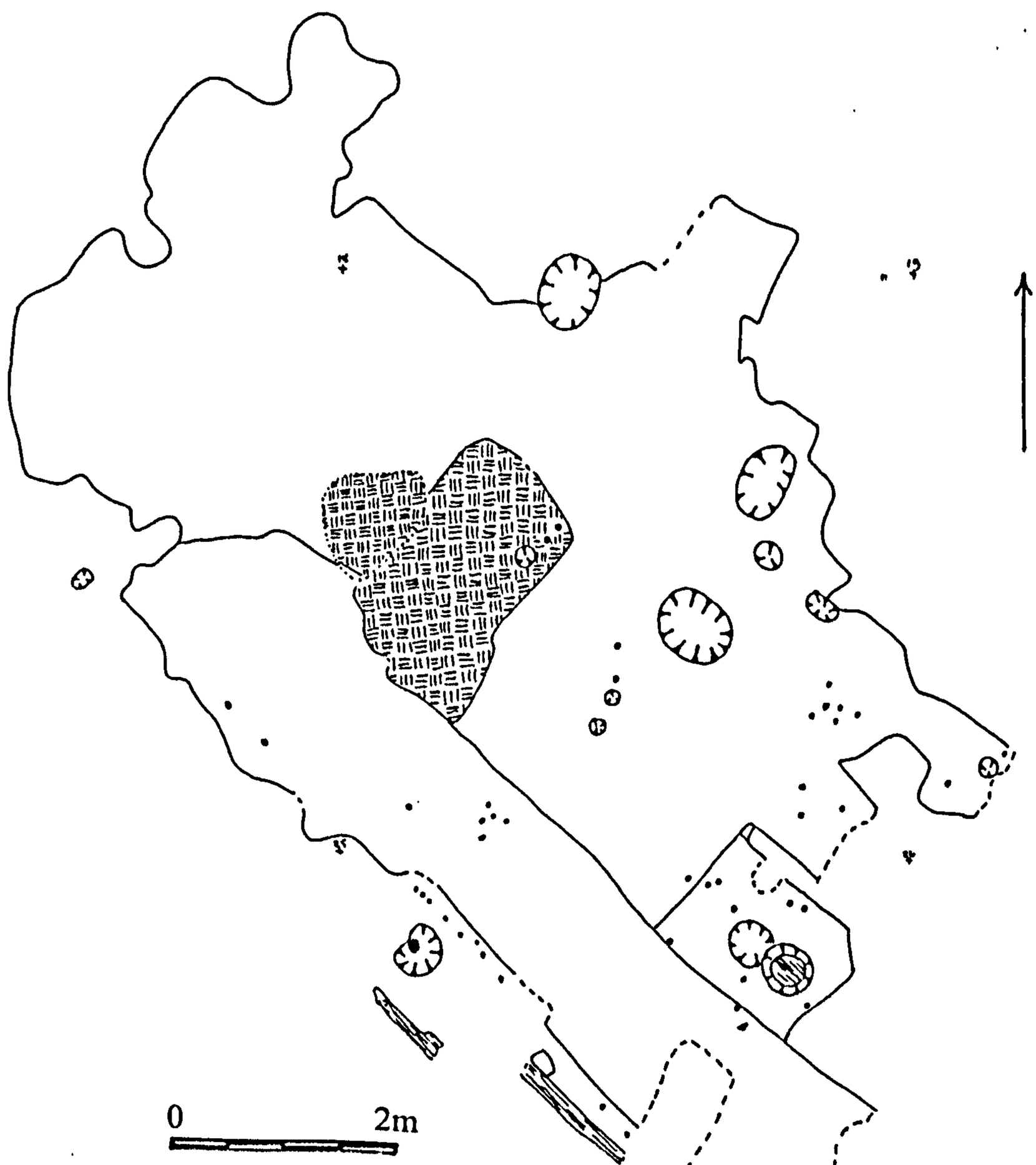

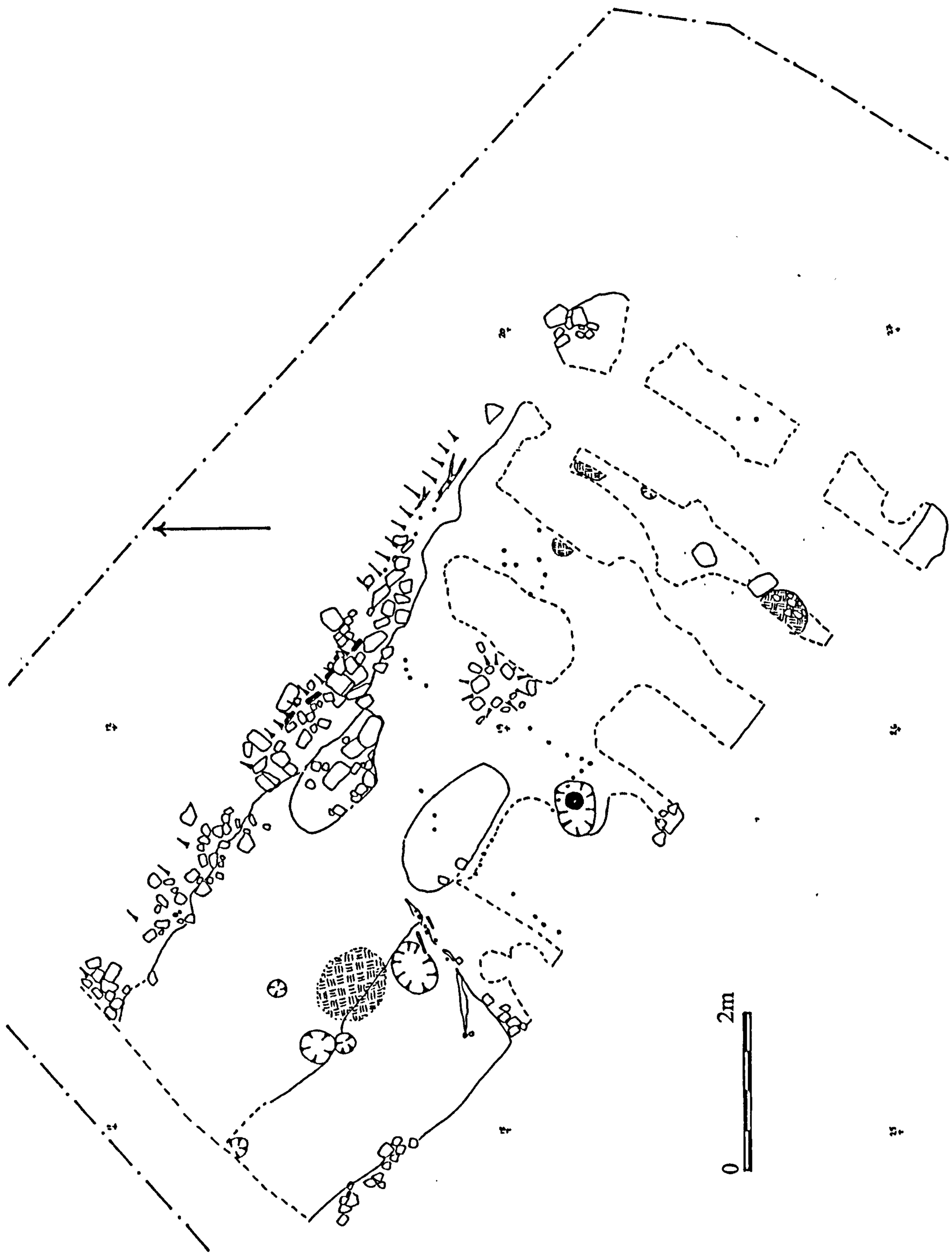

17 – Building 3, Birka 1990-1995

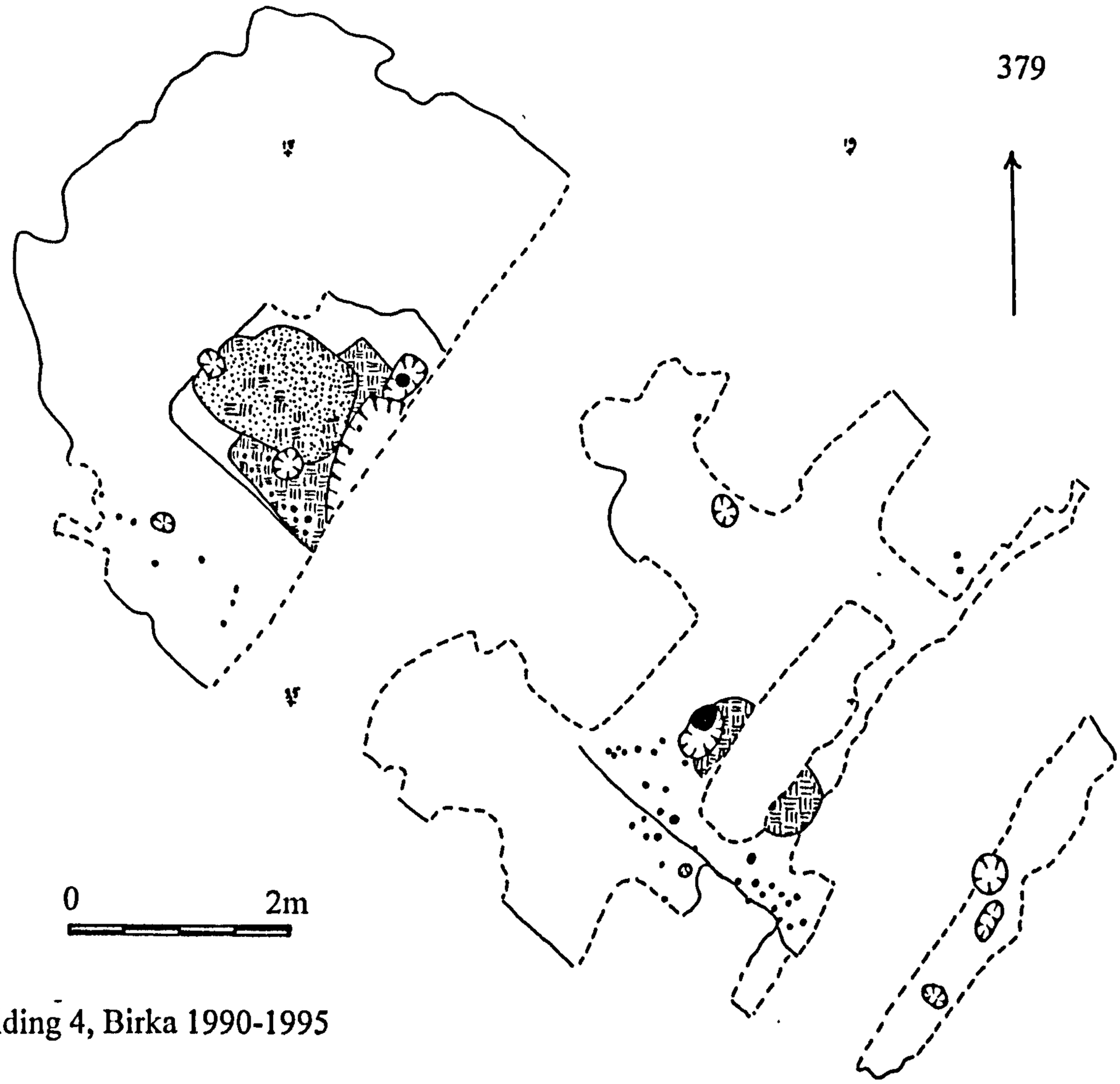

18 - Building 4, Birka 1990-1995

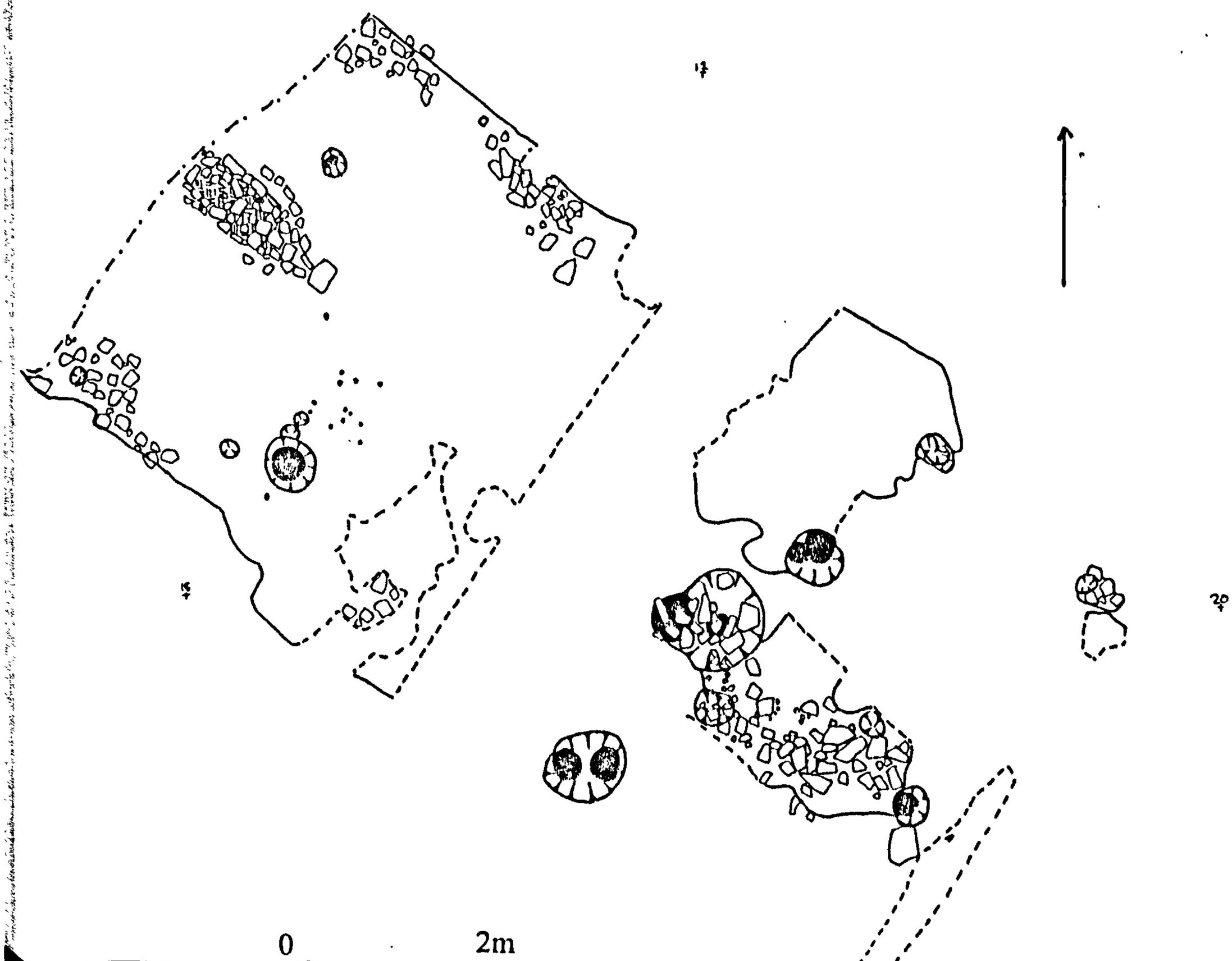

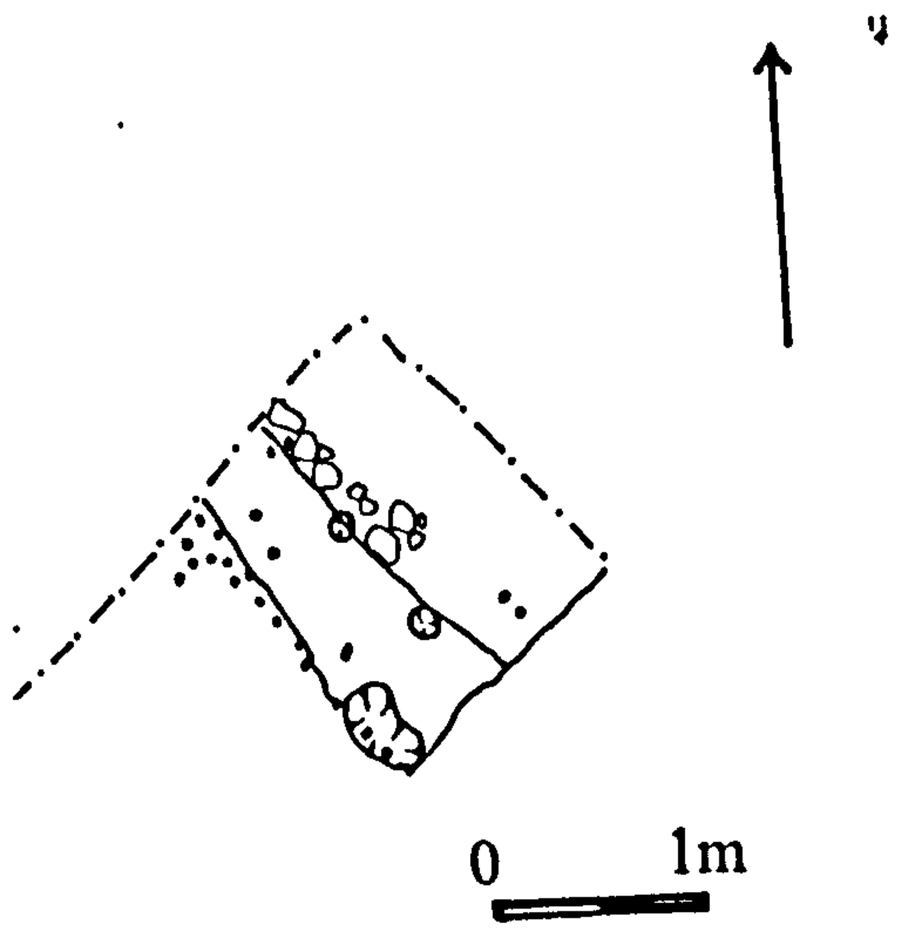

21 – Building 7, Birka 1990-1995

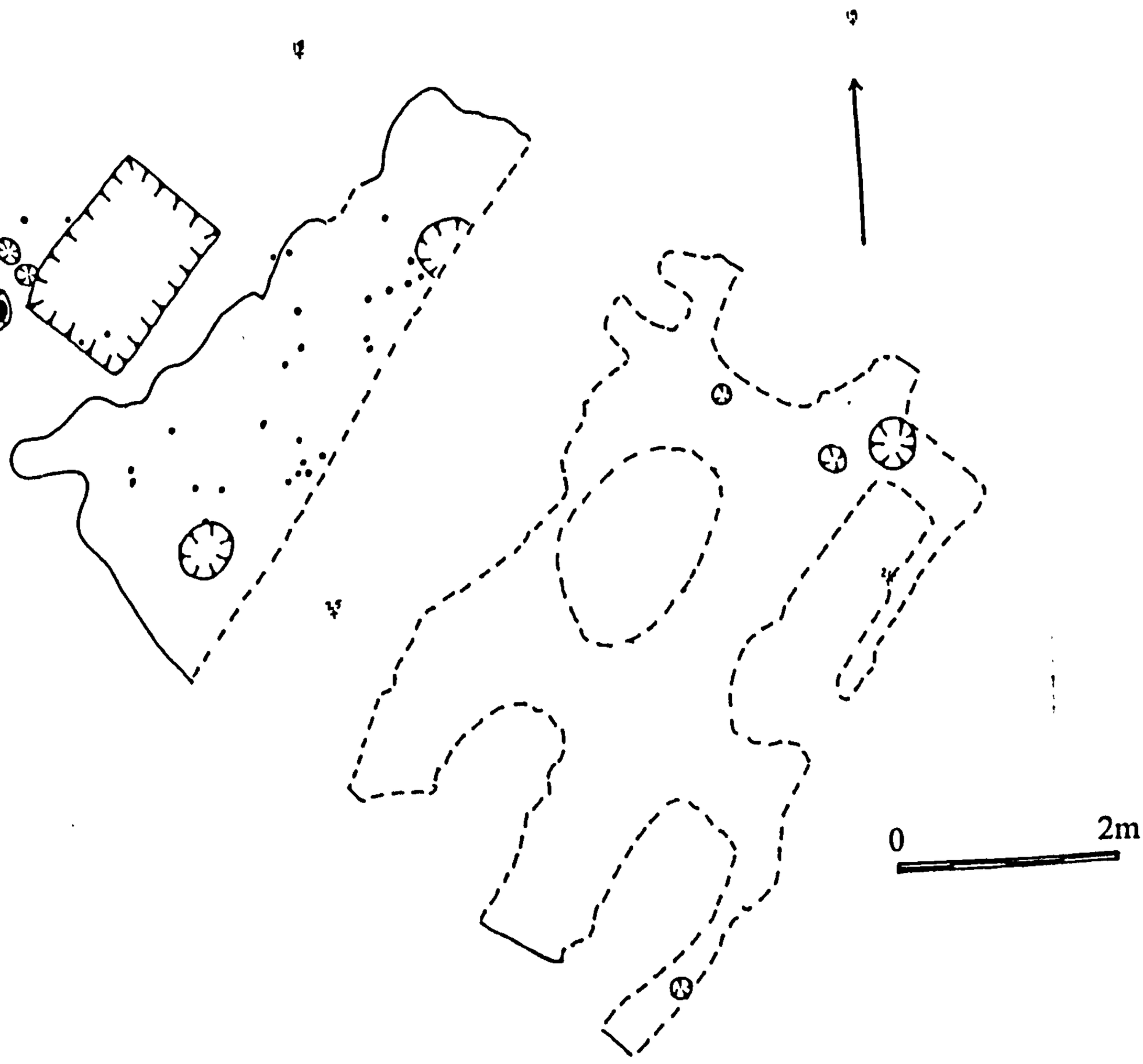

20 – Building 6, Birka 1990-1995

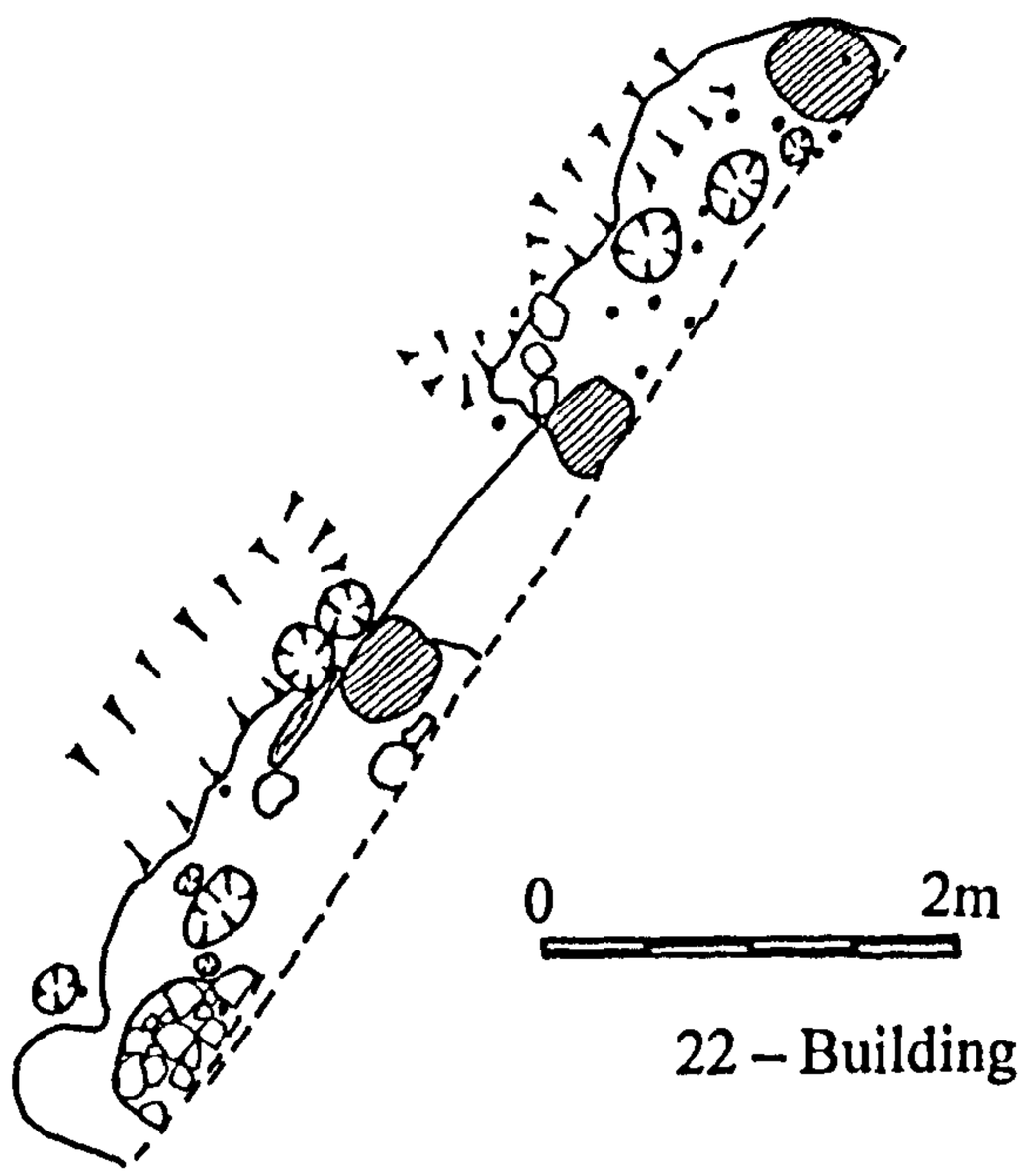

22 – Building 8, Birka 1990-1995

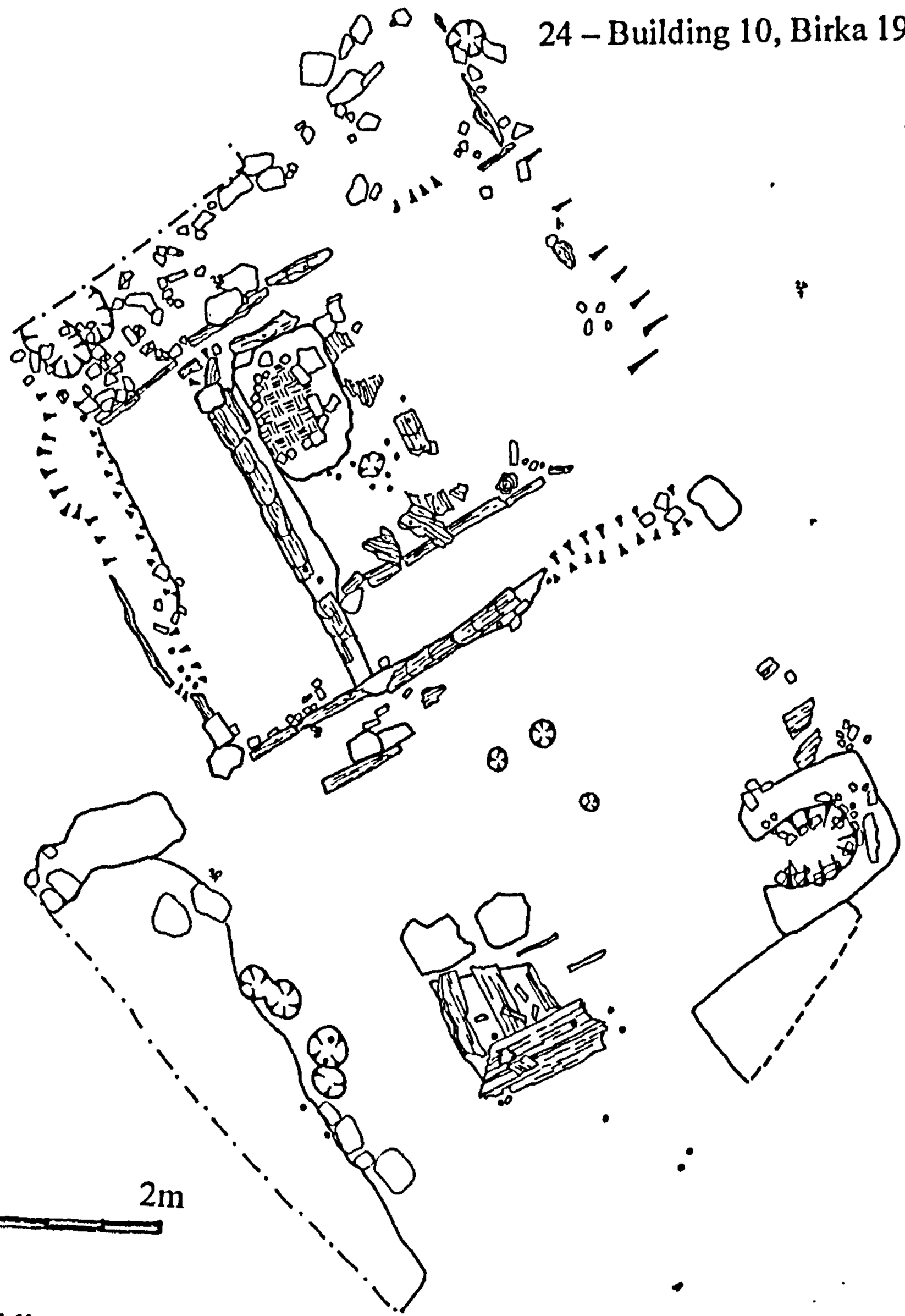

24 – Building 10, Birka 1990-1995

23 – Building 9, Birka 1990-1995

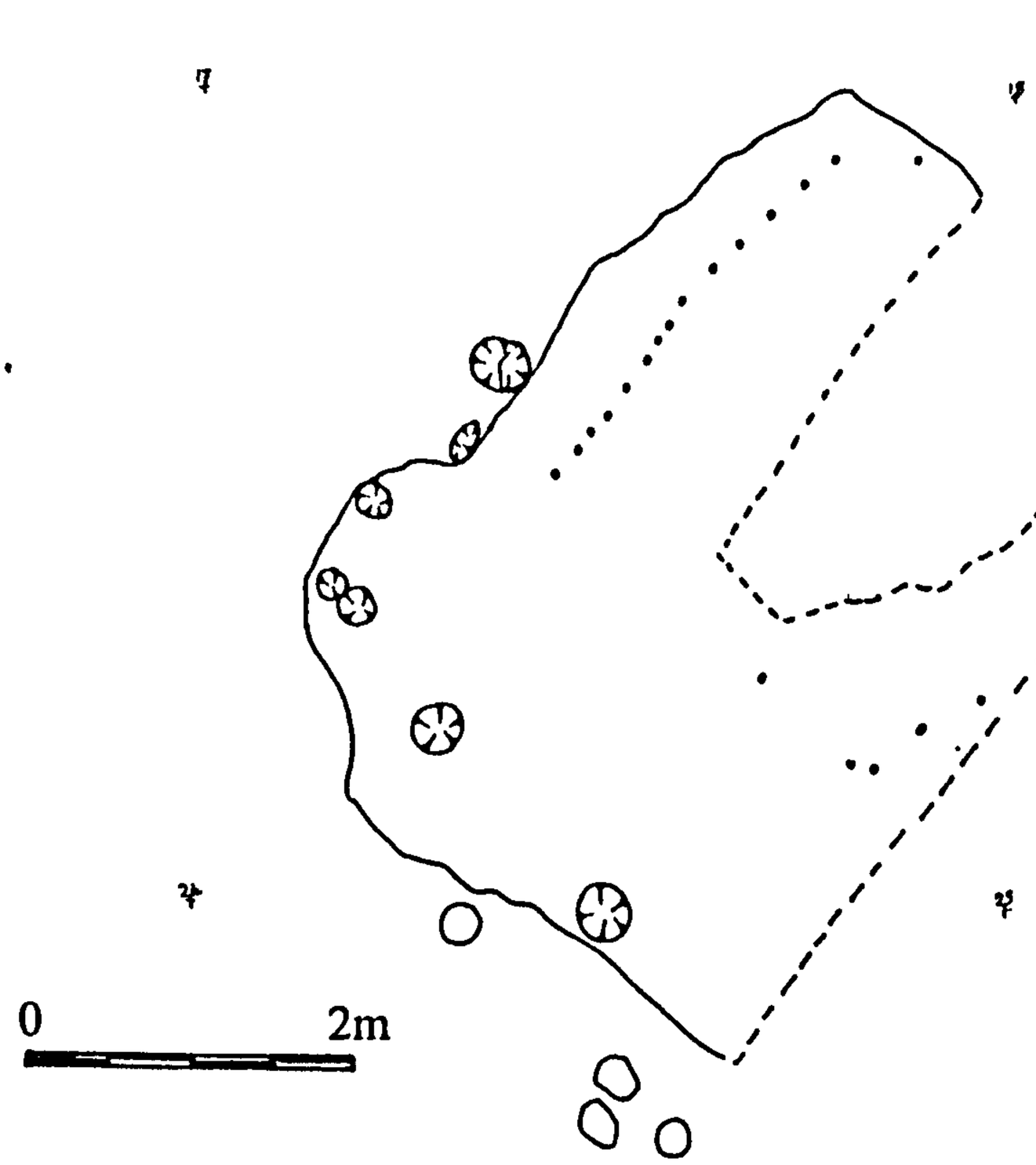

25 – Building 11, Birka 1990-1995

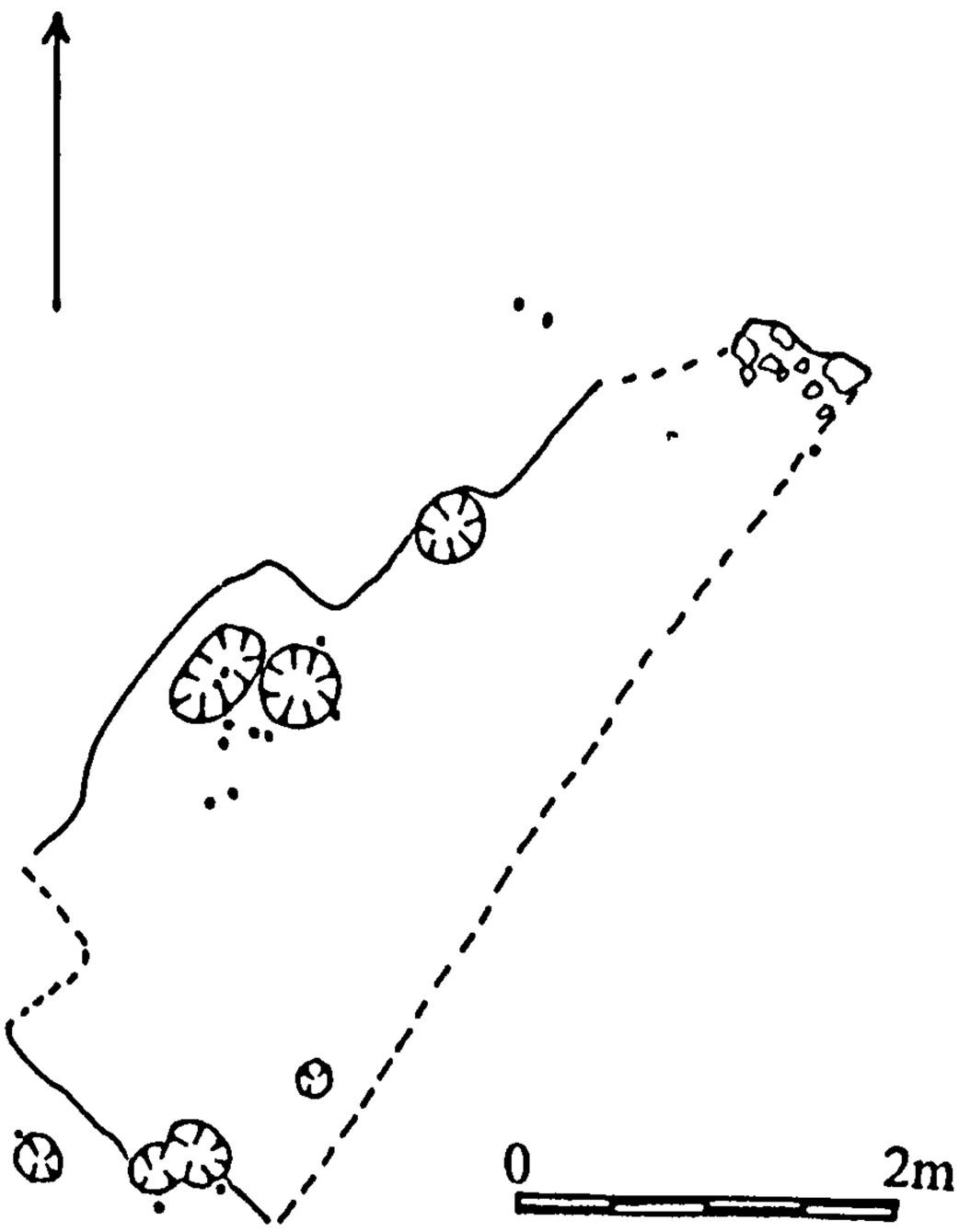

26 – Building 12, Birka 1990-1995

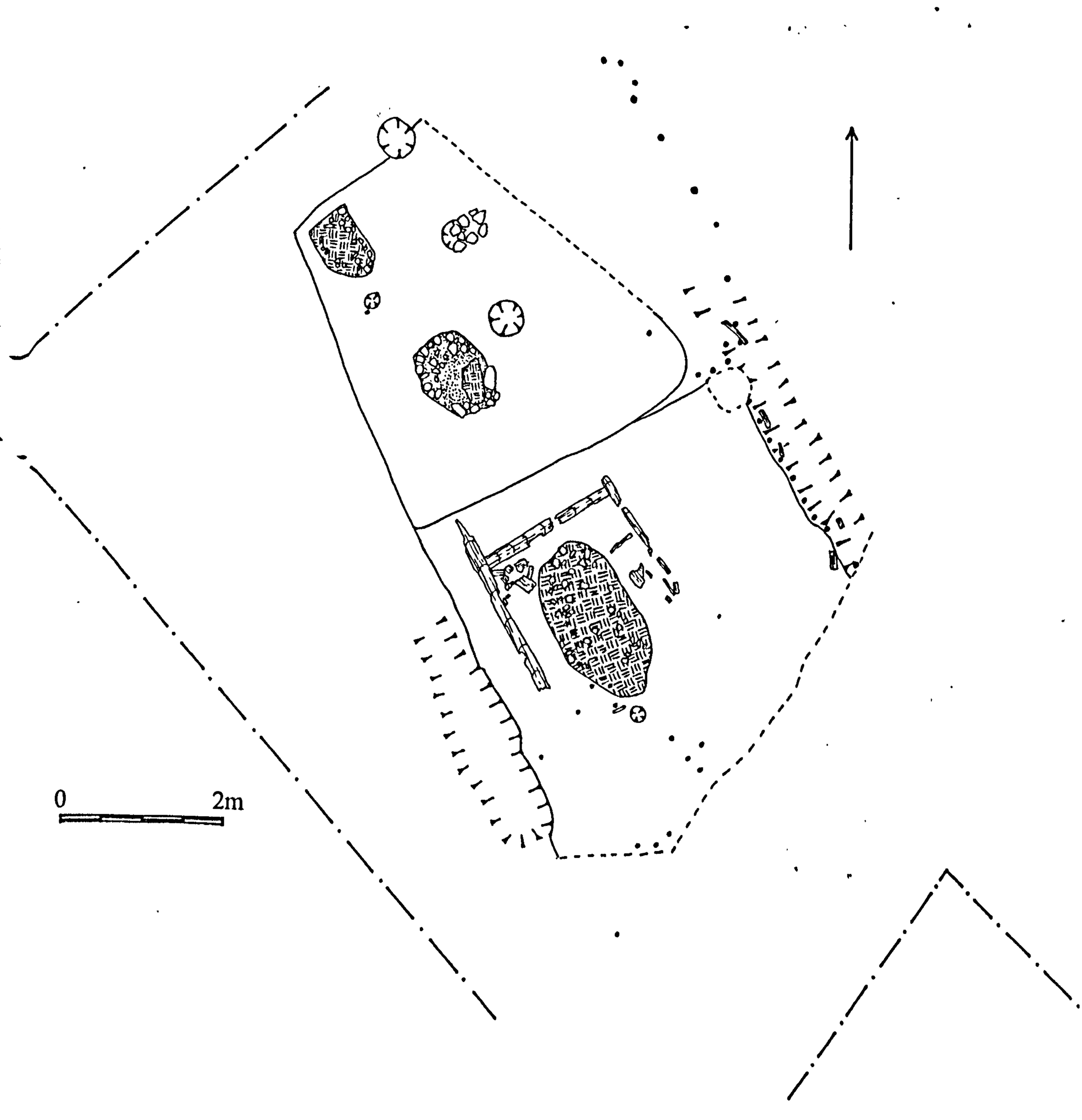

27 – Building 13, Birka 1990-1995

30 – Building 16, Birka 1990-1995

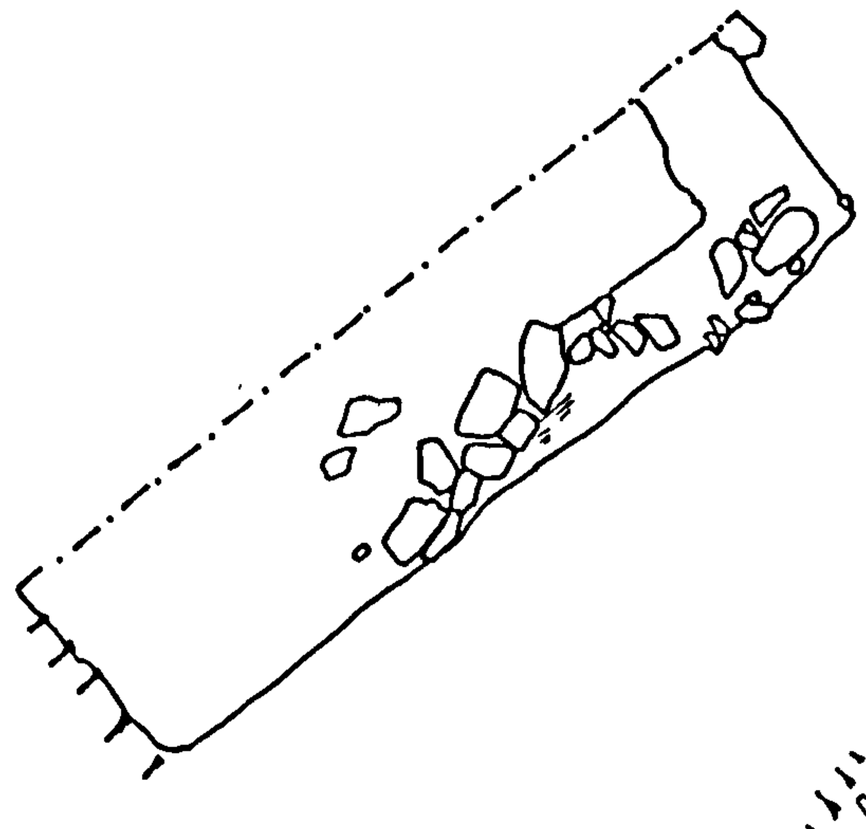

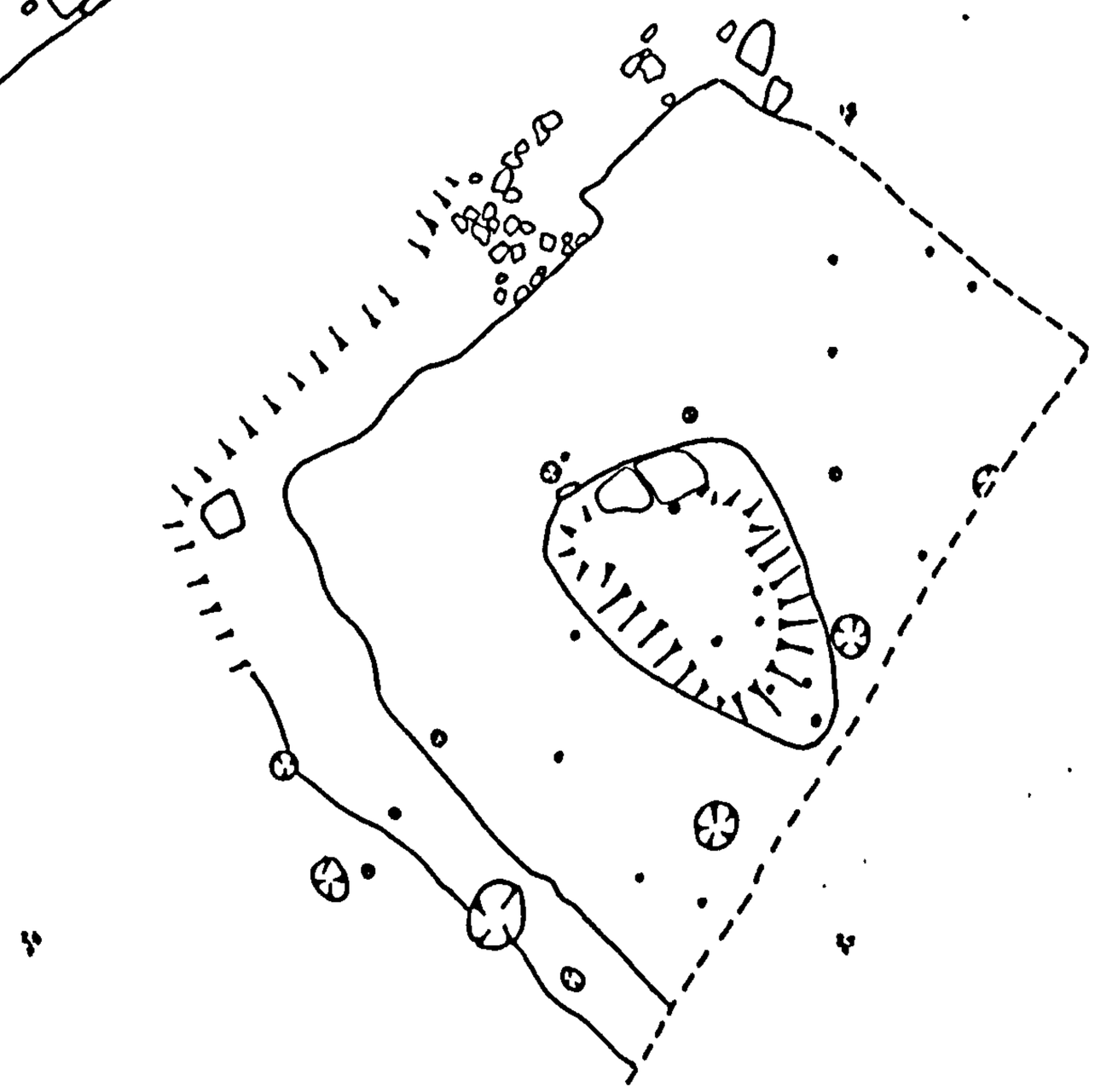

28 – Building 14, Birka 1990-1995

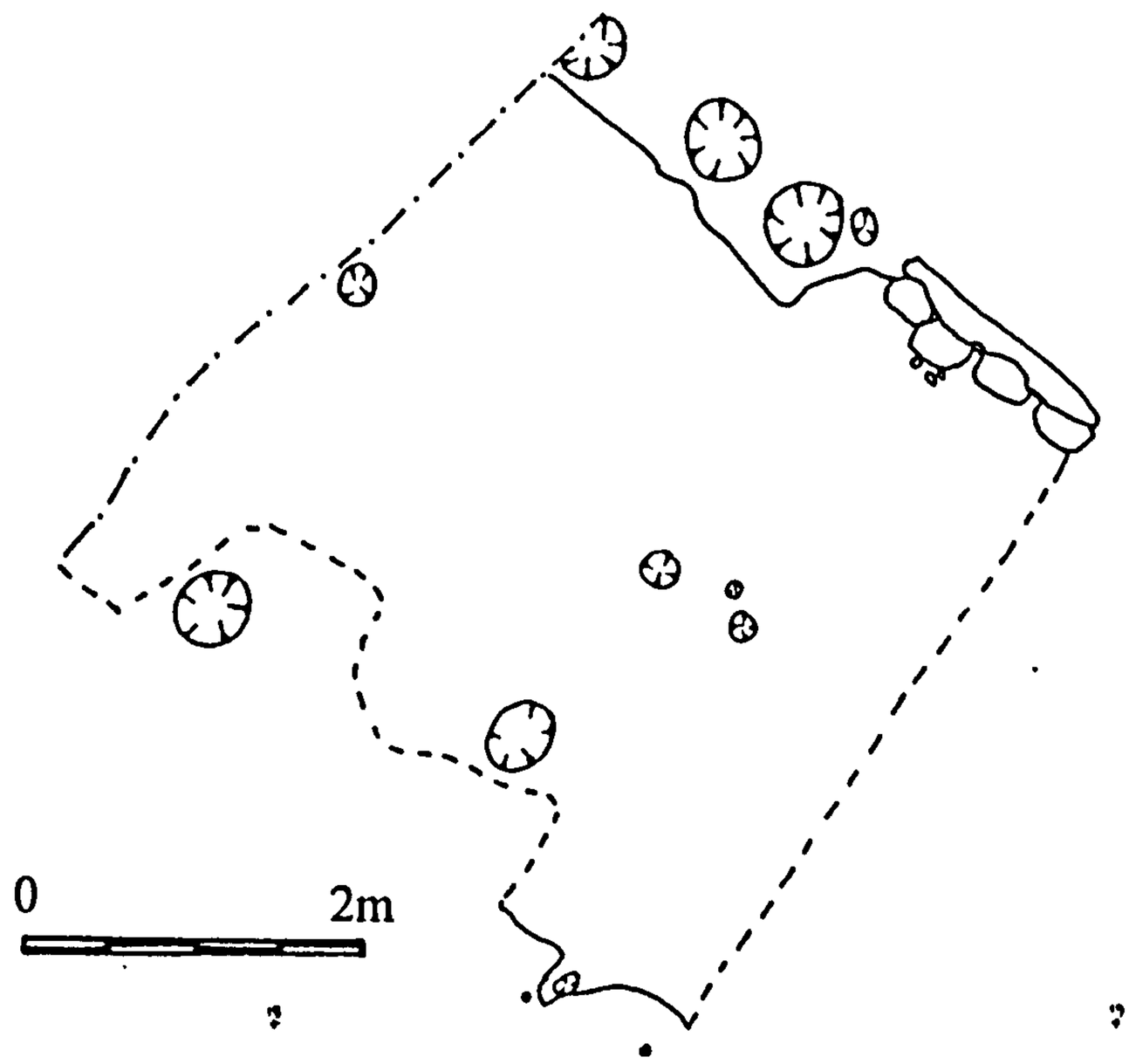

29 – Building 15, Birka 1990-1995

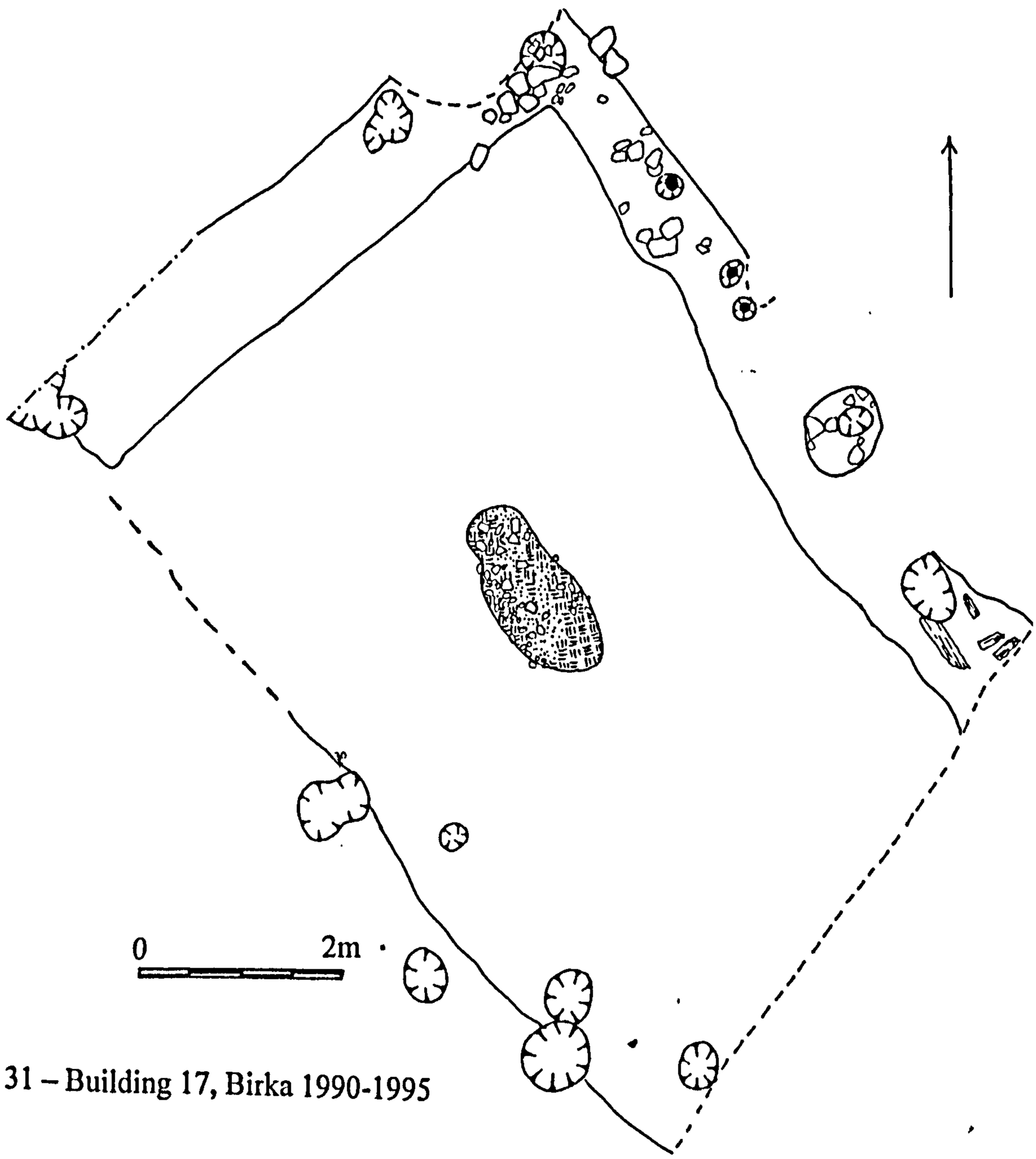

31 – Building 17, Birka 1990-1995

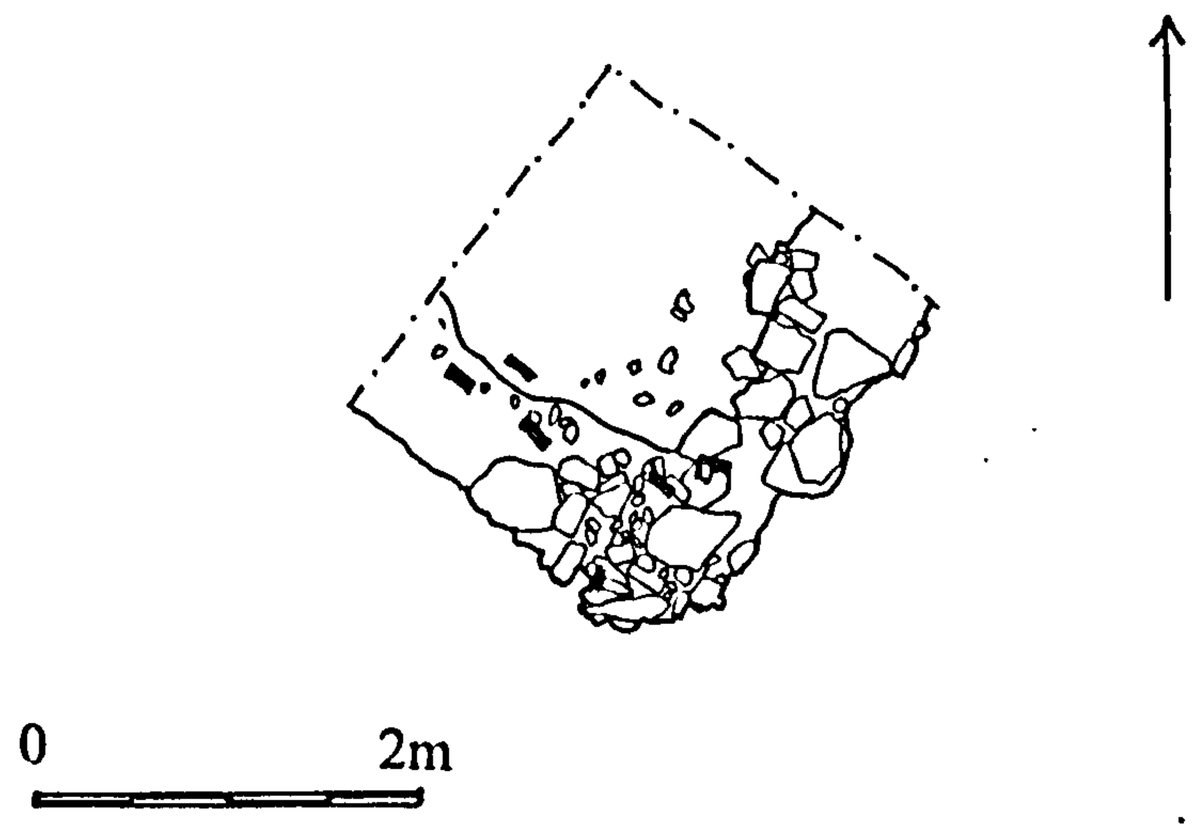

32 – Building 18, Birka 1990-1995

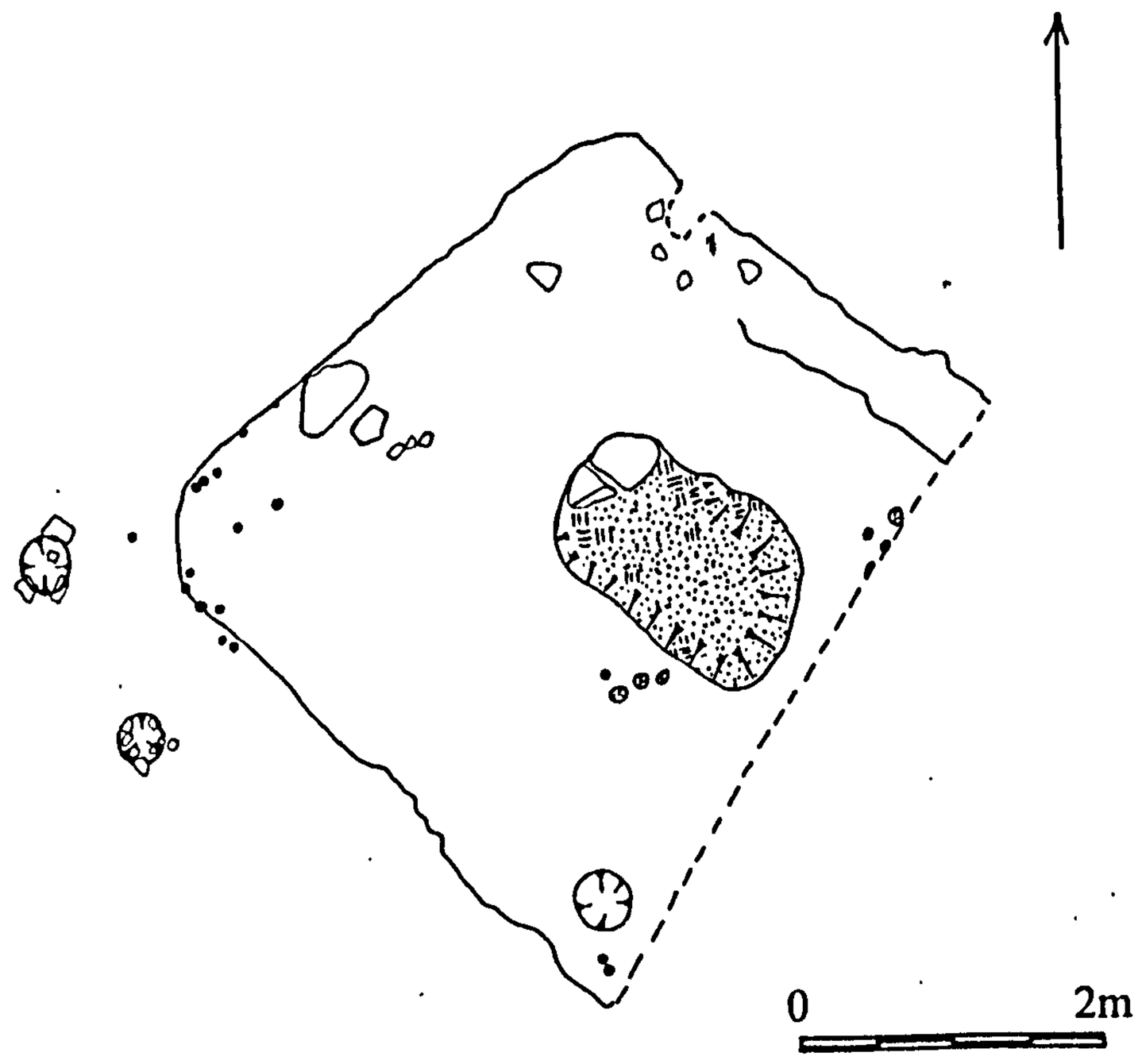

33 – Building 19, Birka 1990-1995

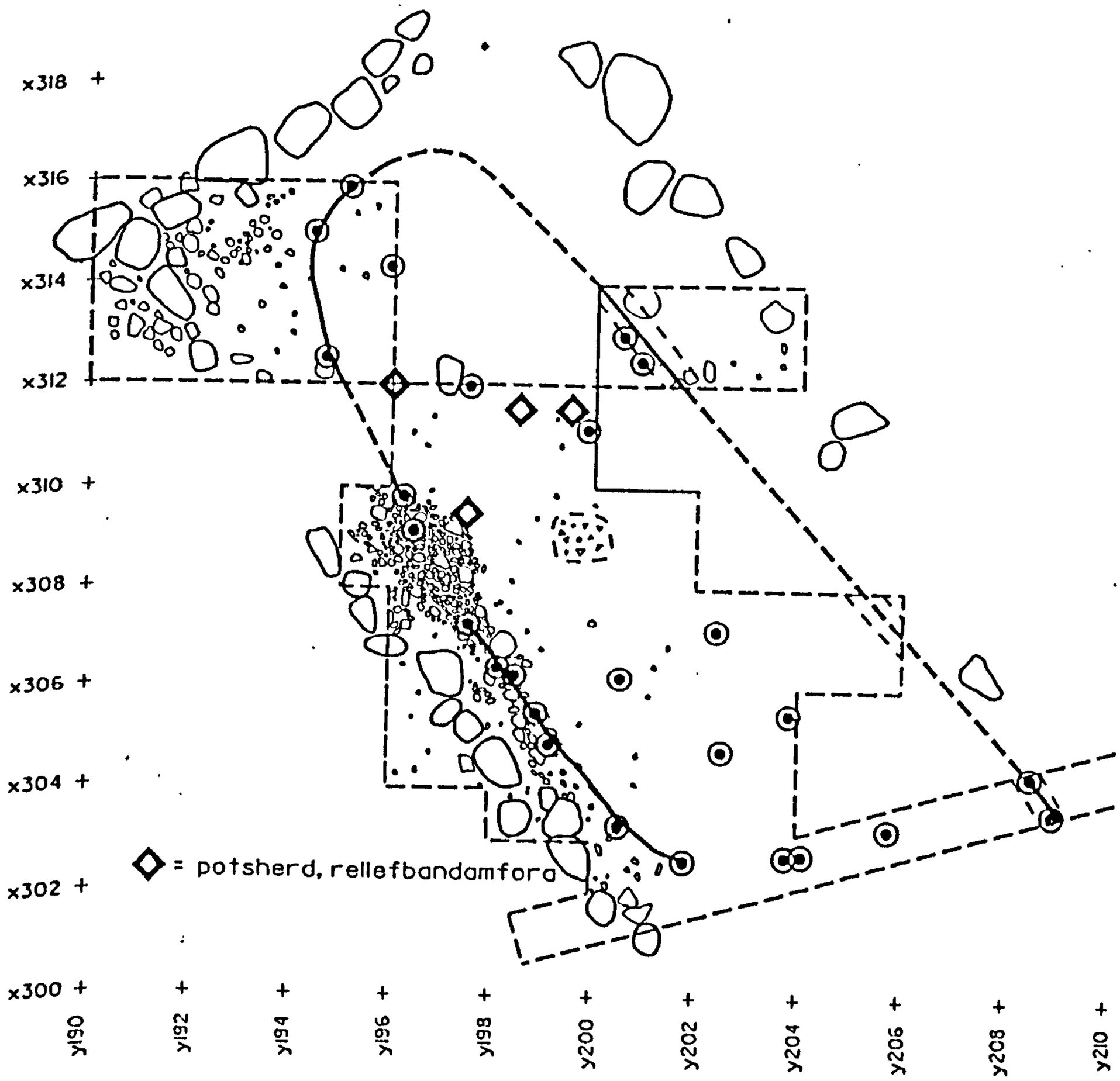

34 – Hall or longhouse on the Birka terraces (Holmquist Olausson 1993, 96)

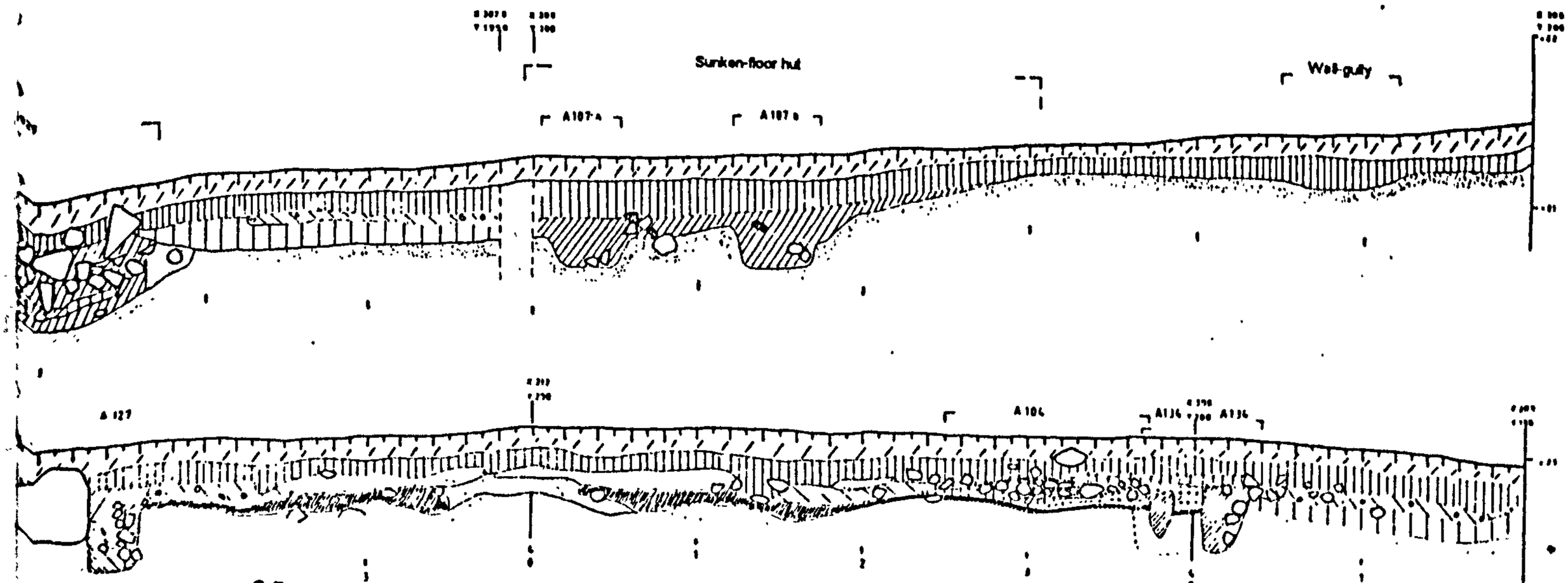

35 – 'Sunken-featured building' on the Birka terraces (Holmquist Olausson 1993, 93)

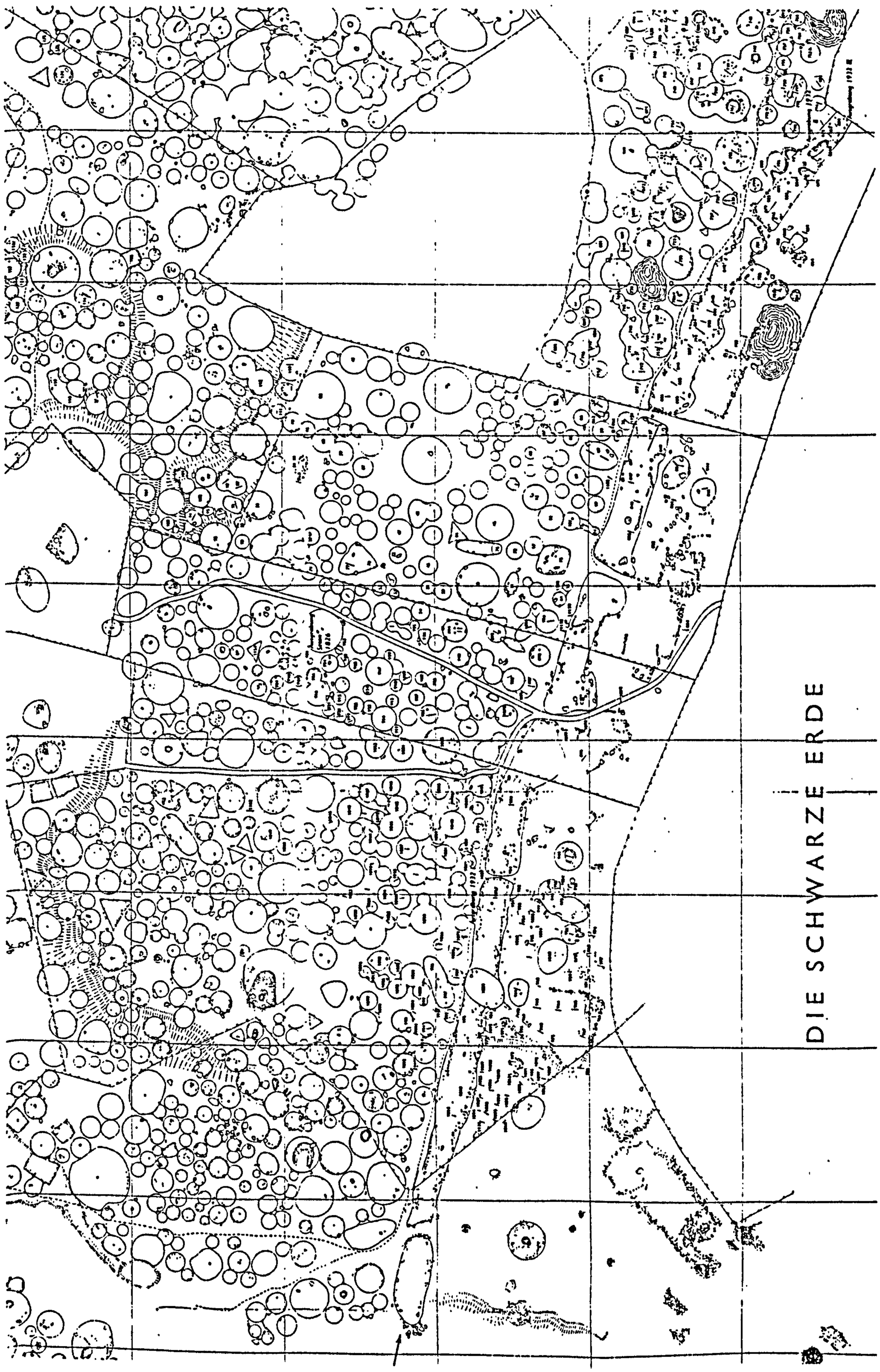

36 – Map of cemeteries at Birka (Arbman 1943)

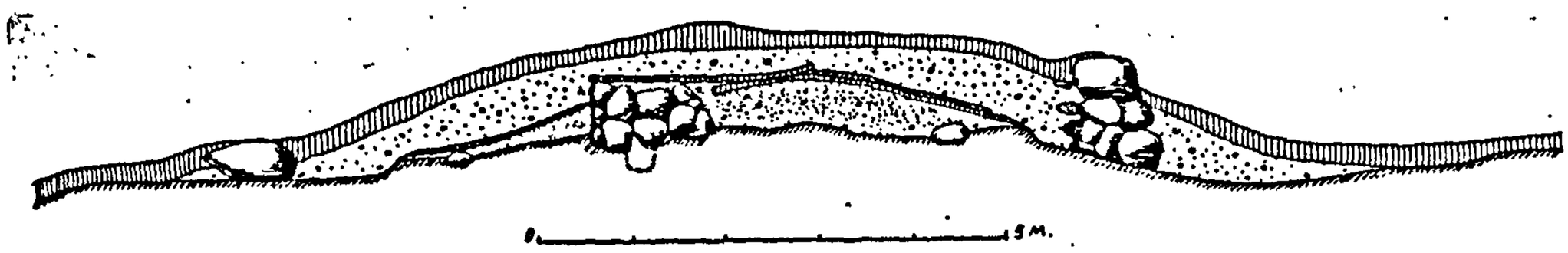

37 – Section through the town rampart (Arbman 1939, 69)

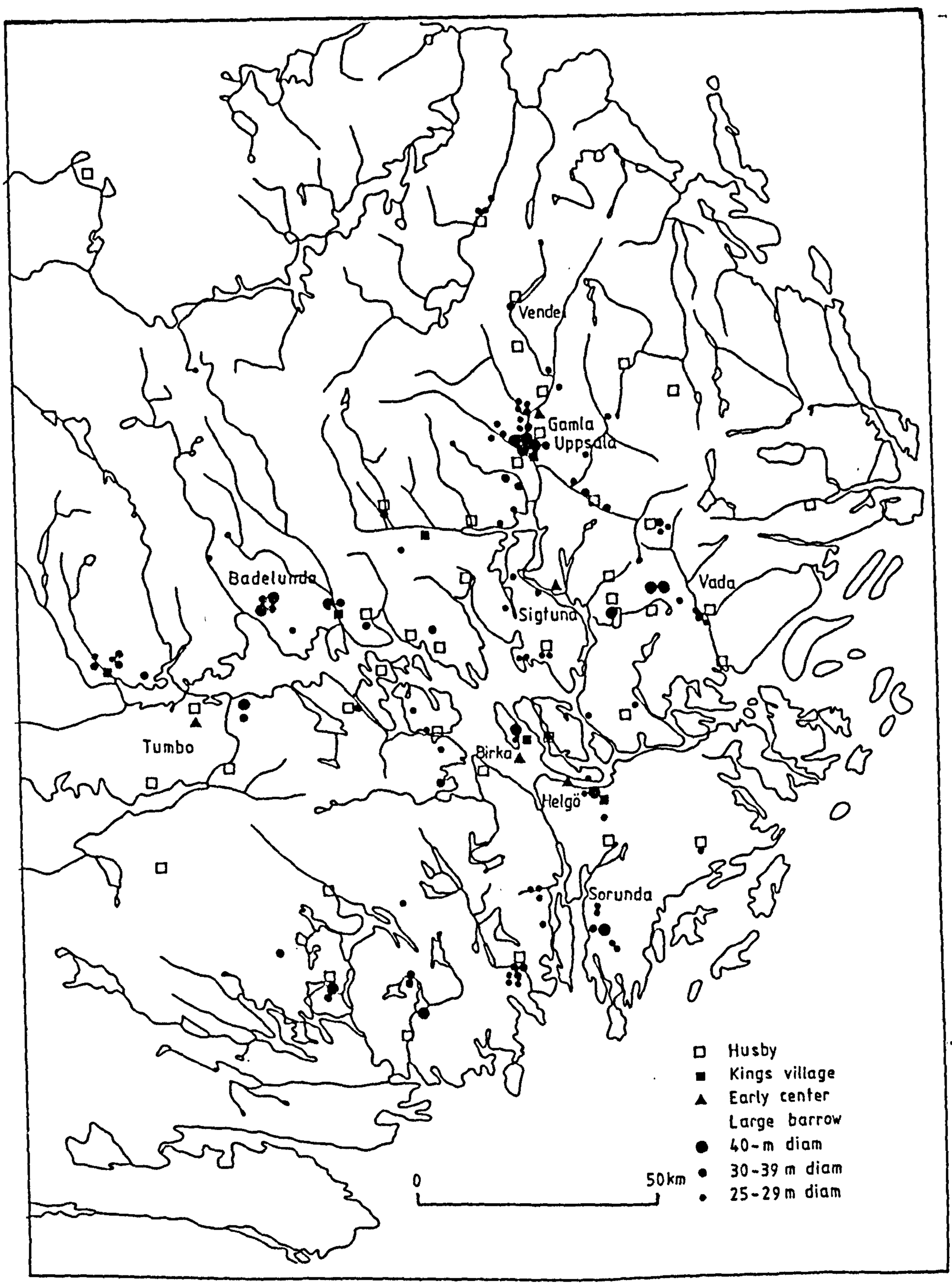

38 – Location map of Helgö and Sigtuna in relation to other Mälar Valley sites (Hyenstrand 1981, 37)

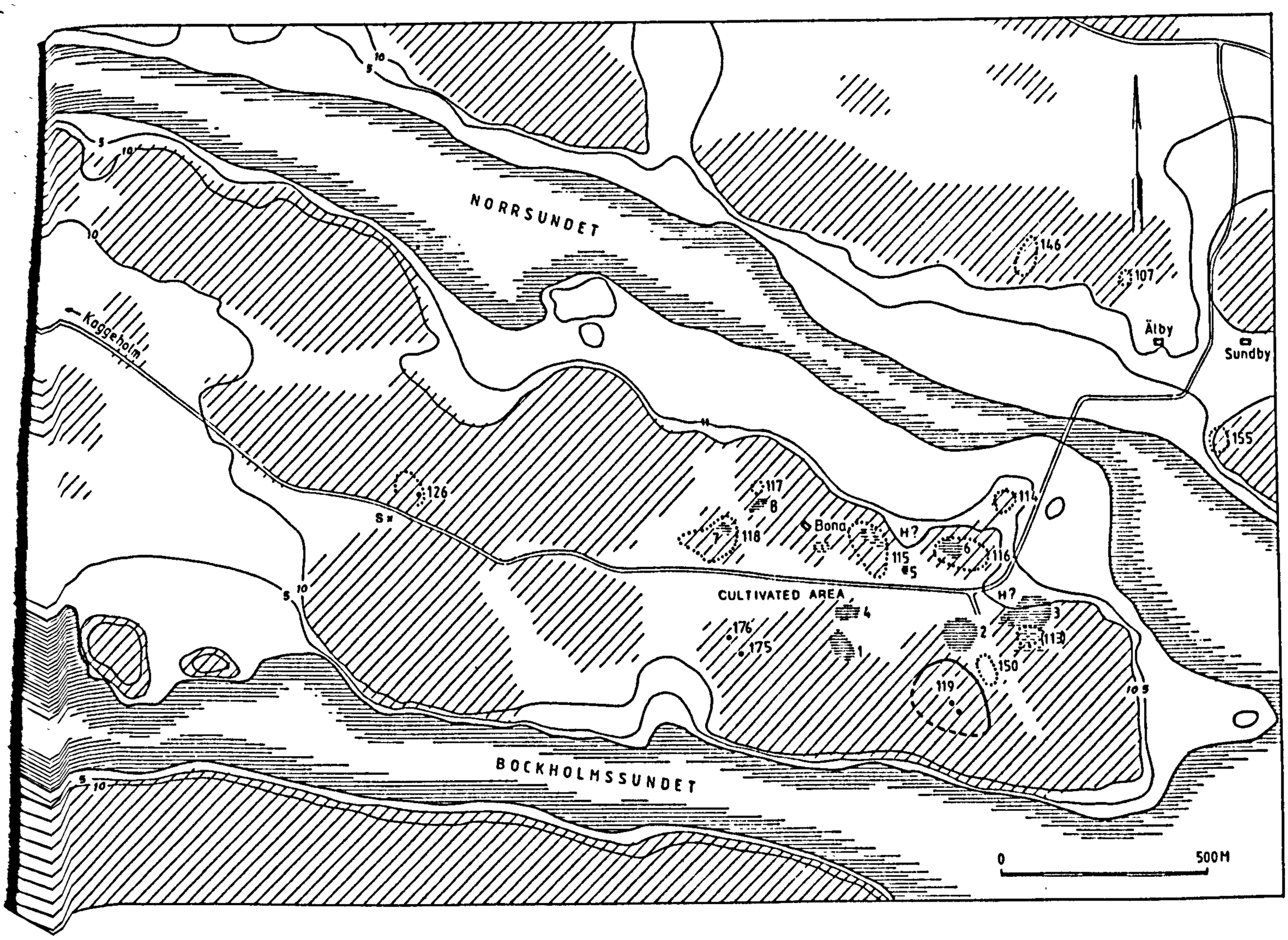

39 – Site plan of Helgö (Lamm et al. 1982, 2)

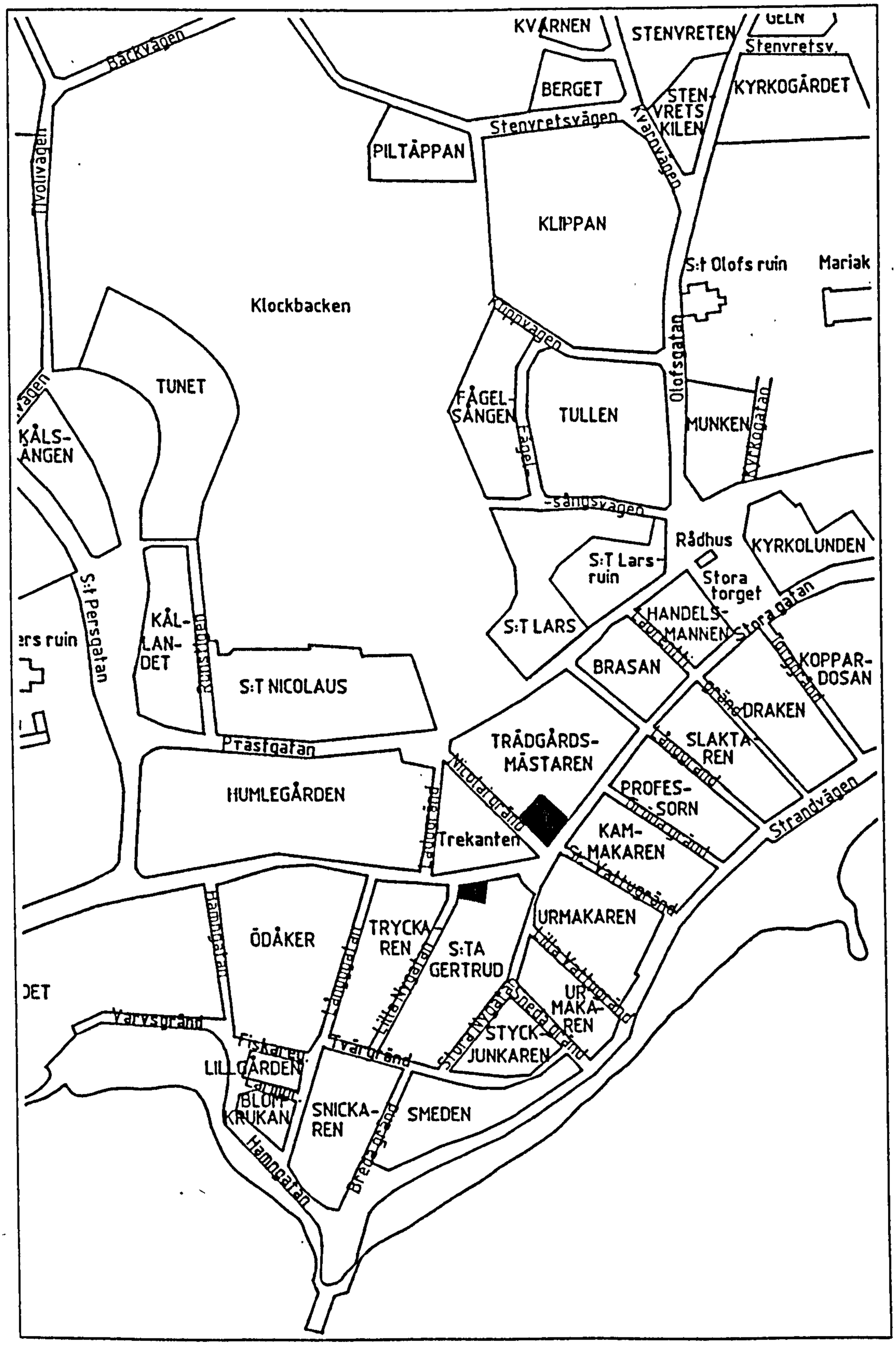

40 – Location map of the Sigtuna excavations (Bäck & Carlsson 1994,6)

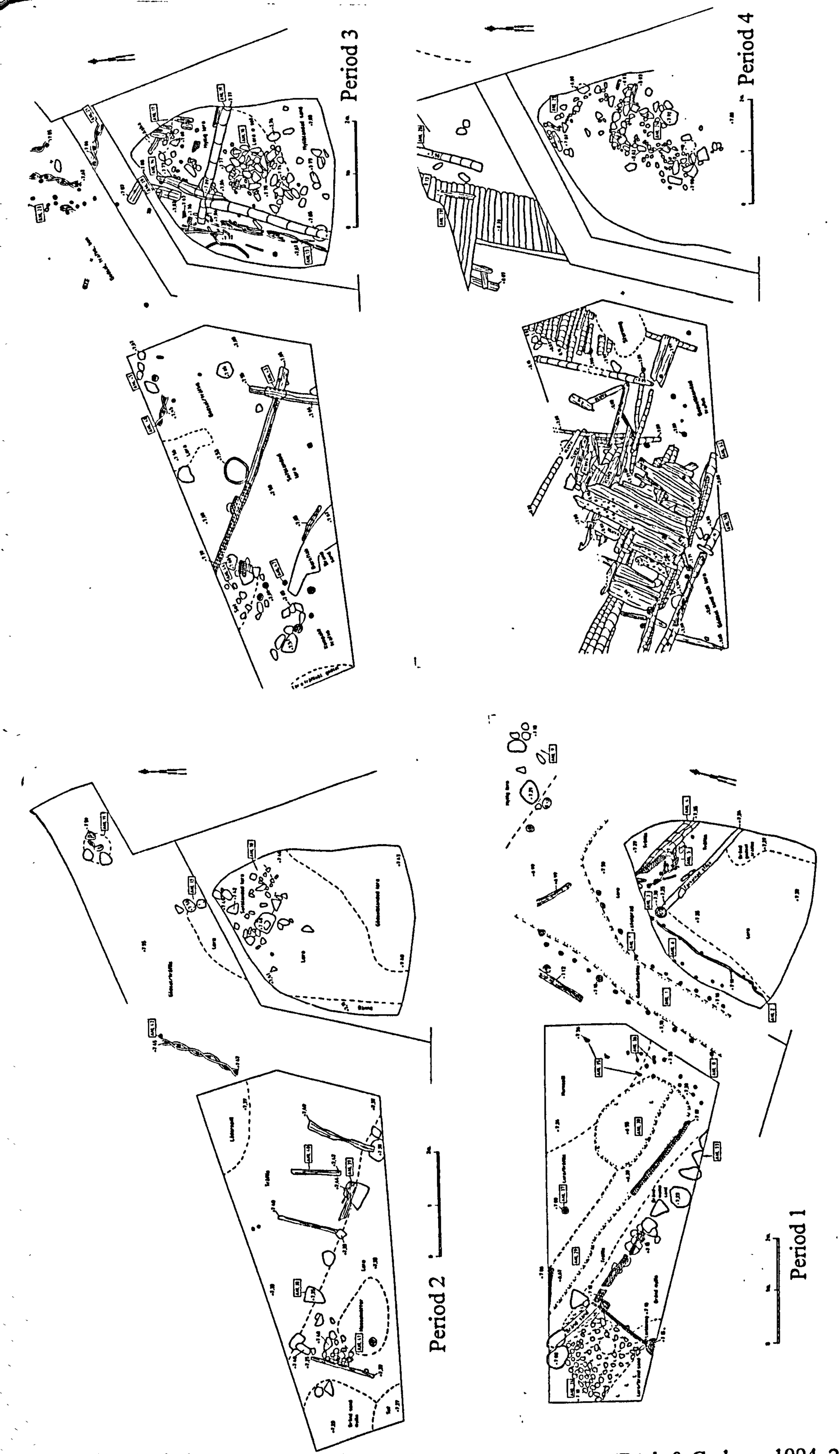

41 – Period plans of excavations at S:ta Gertrud's, Sigtuna (Bäck & Carlsson 1994, 25,

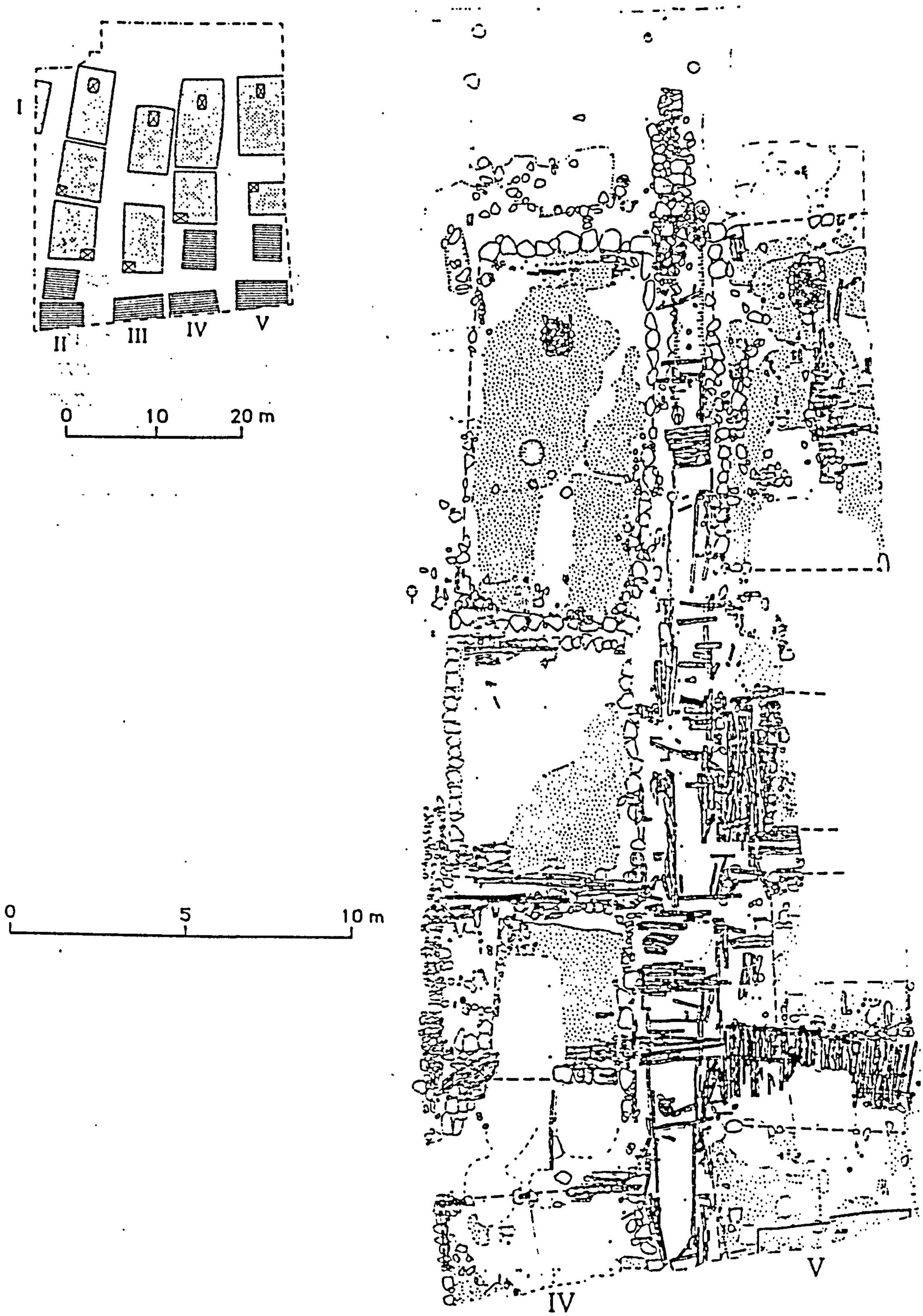

42 – plans of excavations at Stora Gatan (Petterson 1993, 27)

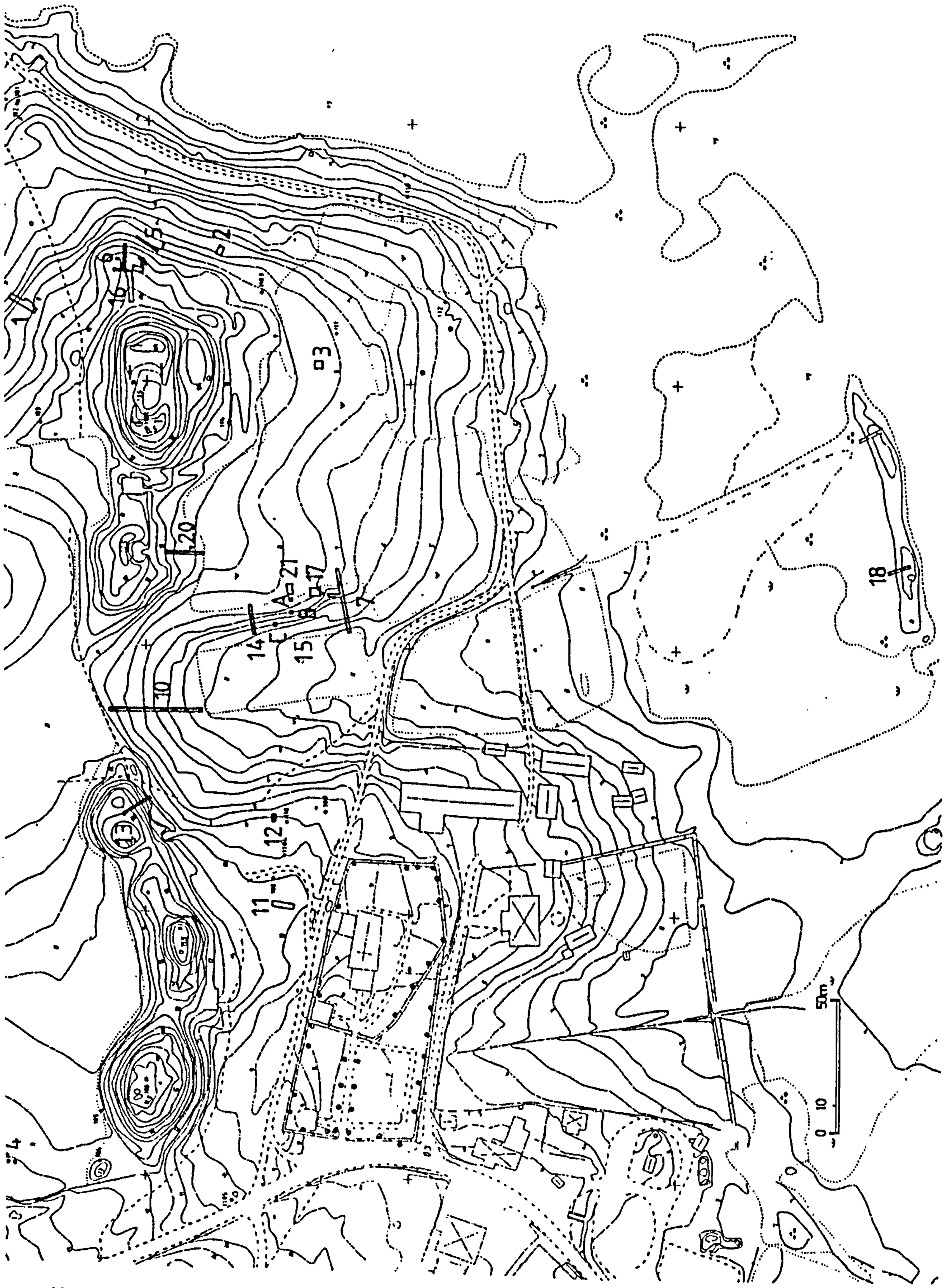

43 – Location map and site plan of excavations at Alsnöhus (Brunstedt 1996, 8, 16) scale 1:2 000

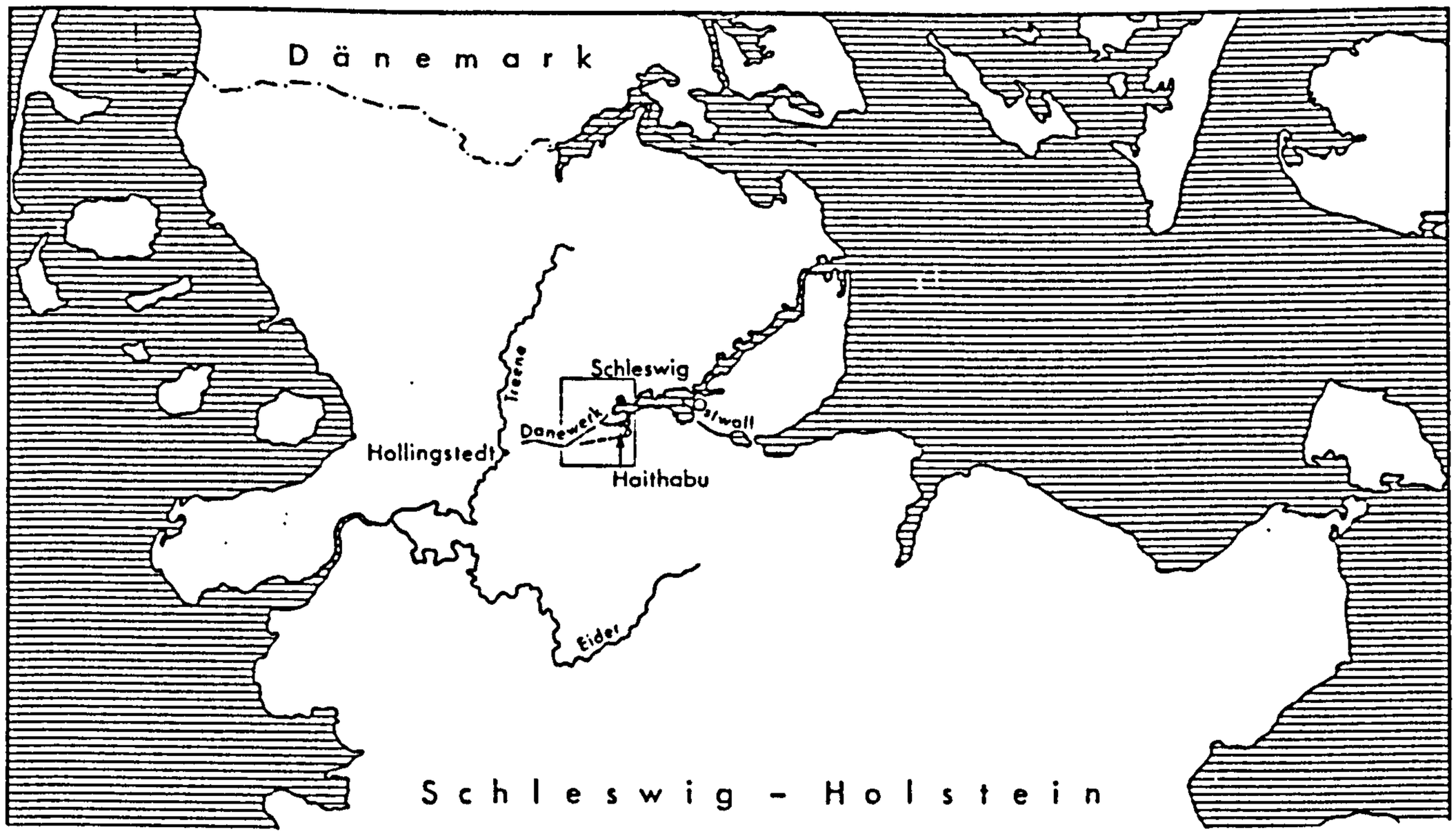

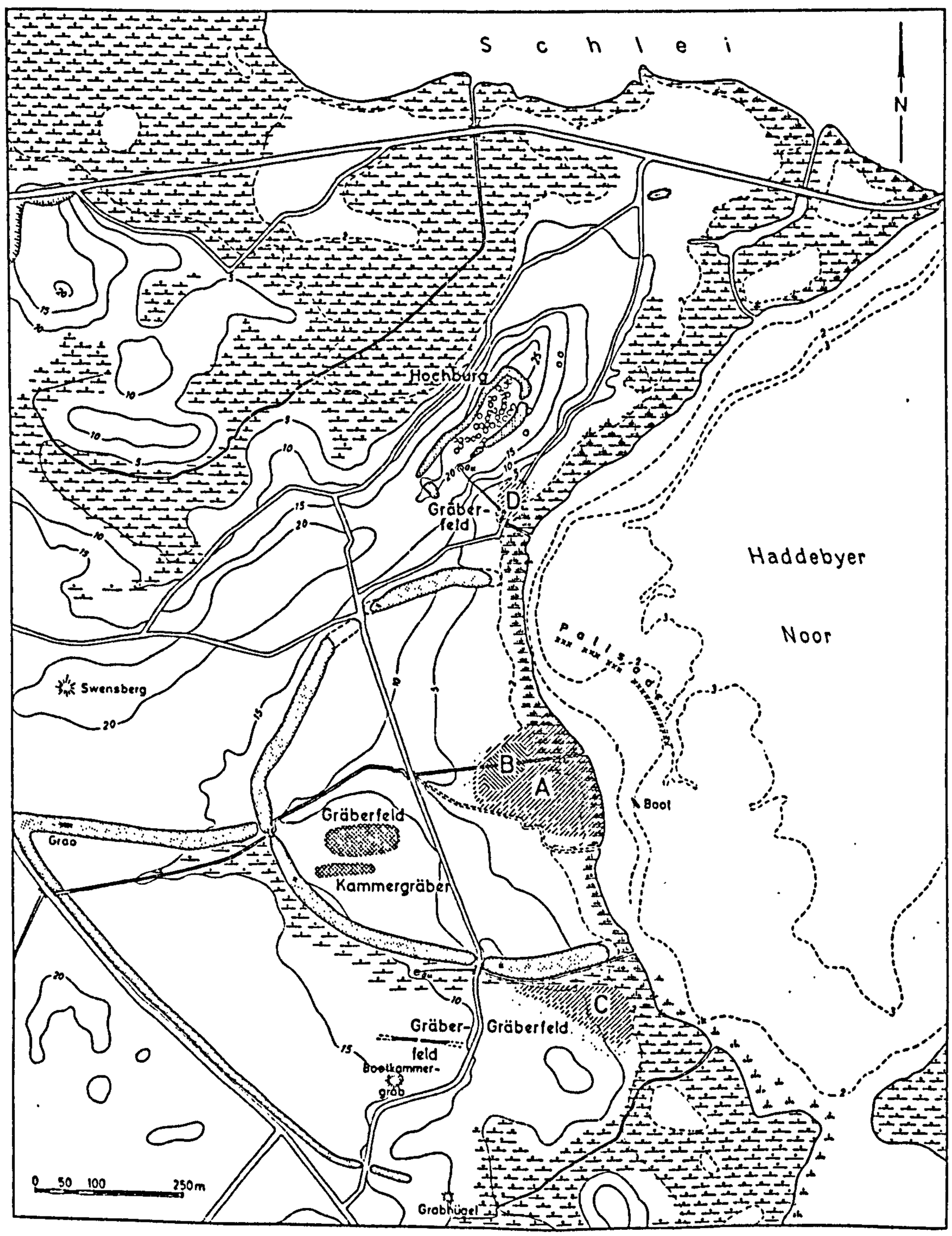

44 – Location map and settlement plan of Hedeby (Schietzel 1985, 148; Jankuhn 1986,

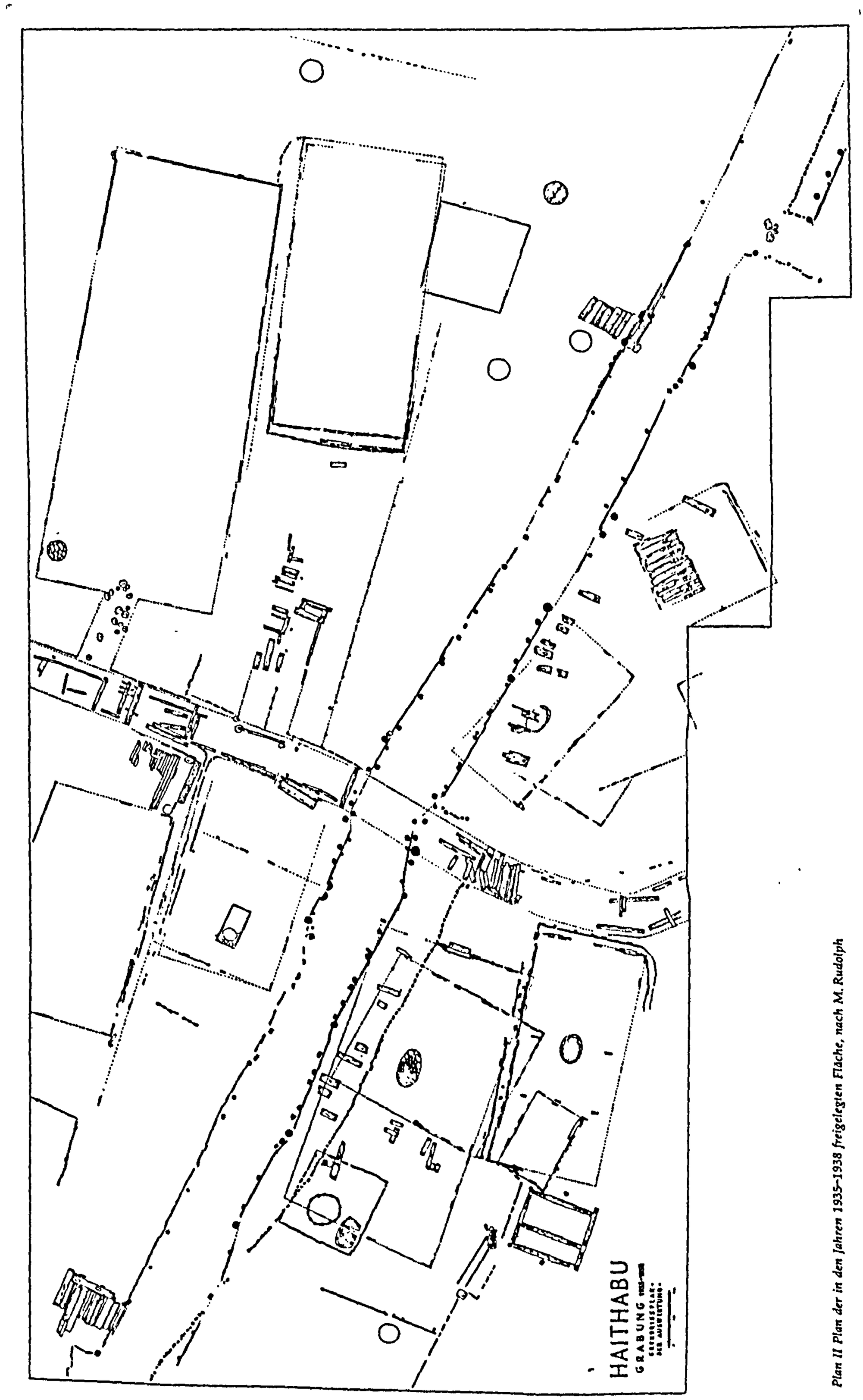

Plan II Plan der in den Jahren 1935–1938 freigelegten Fläche, nach M. Rudolph

45 – Plan of Jankuhn's excavations in the centre of Hedeby (Jankuhn 1986, 91)

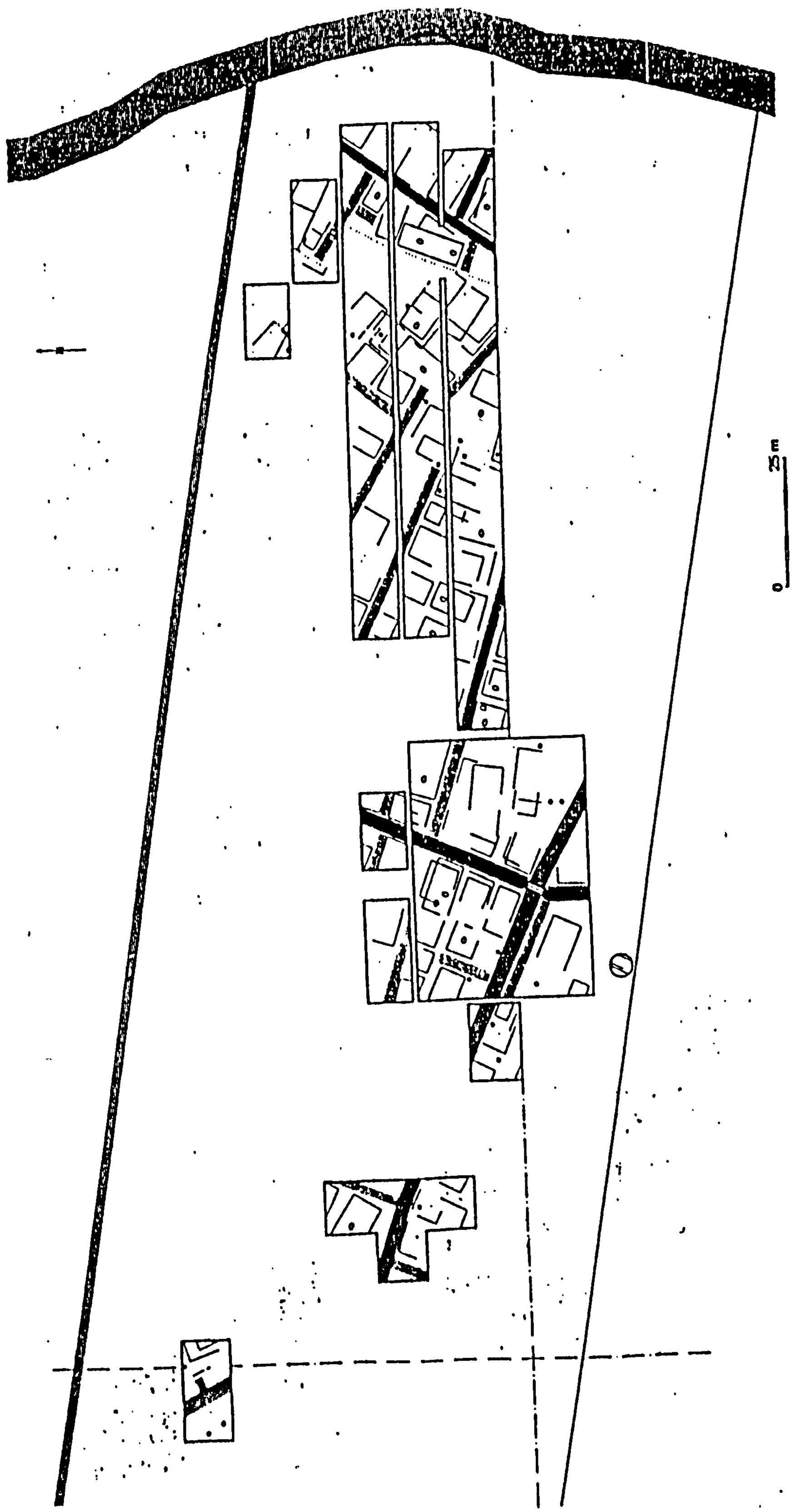

46 – Plan of Schietzel's excavations in the centre of Hedeby (Schietzel 1985, 152)

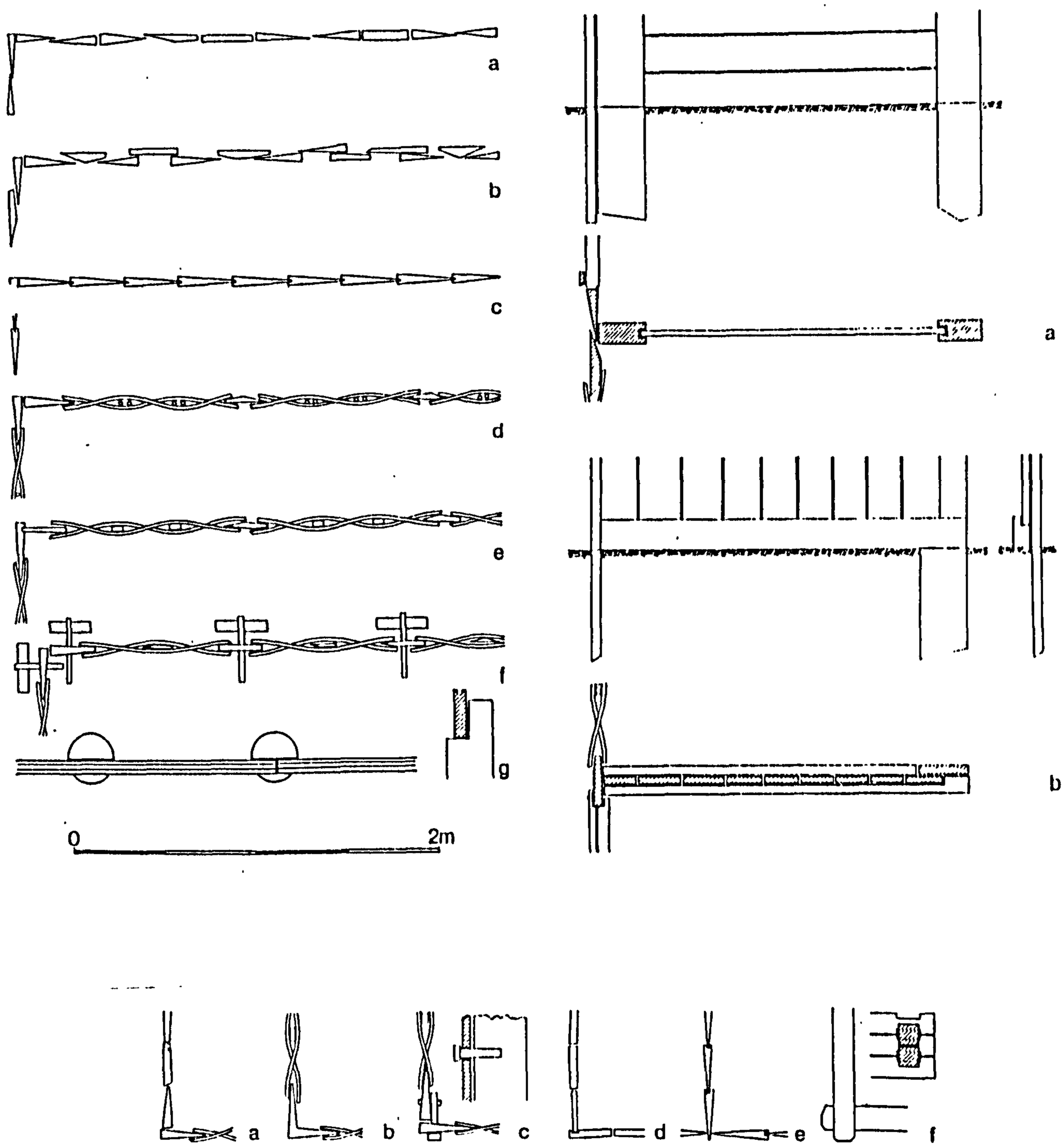

47 – Schematic drawing of different wall construction techniques from Hedeby (Schietzel 1985, 153-155)

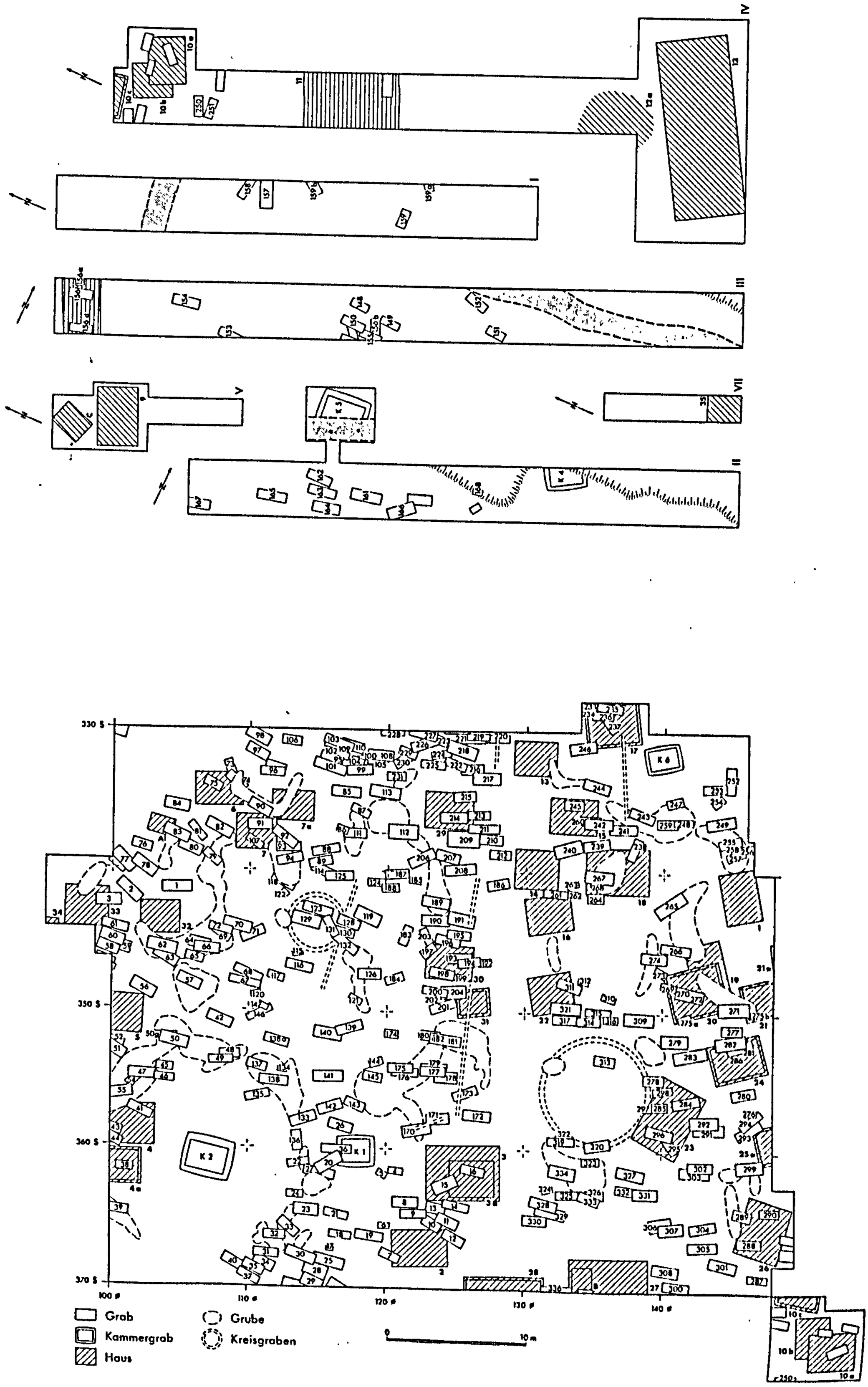

48 – Plan of excavations in the Southern Settlement (Steuer 1974 t66, t67)

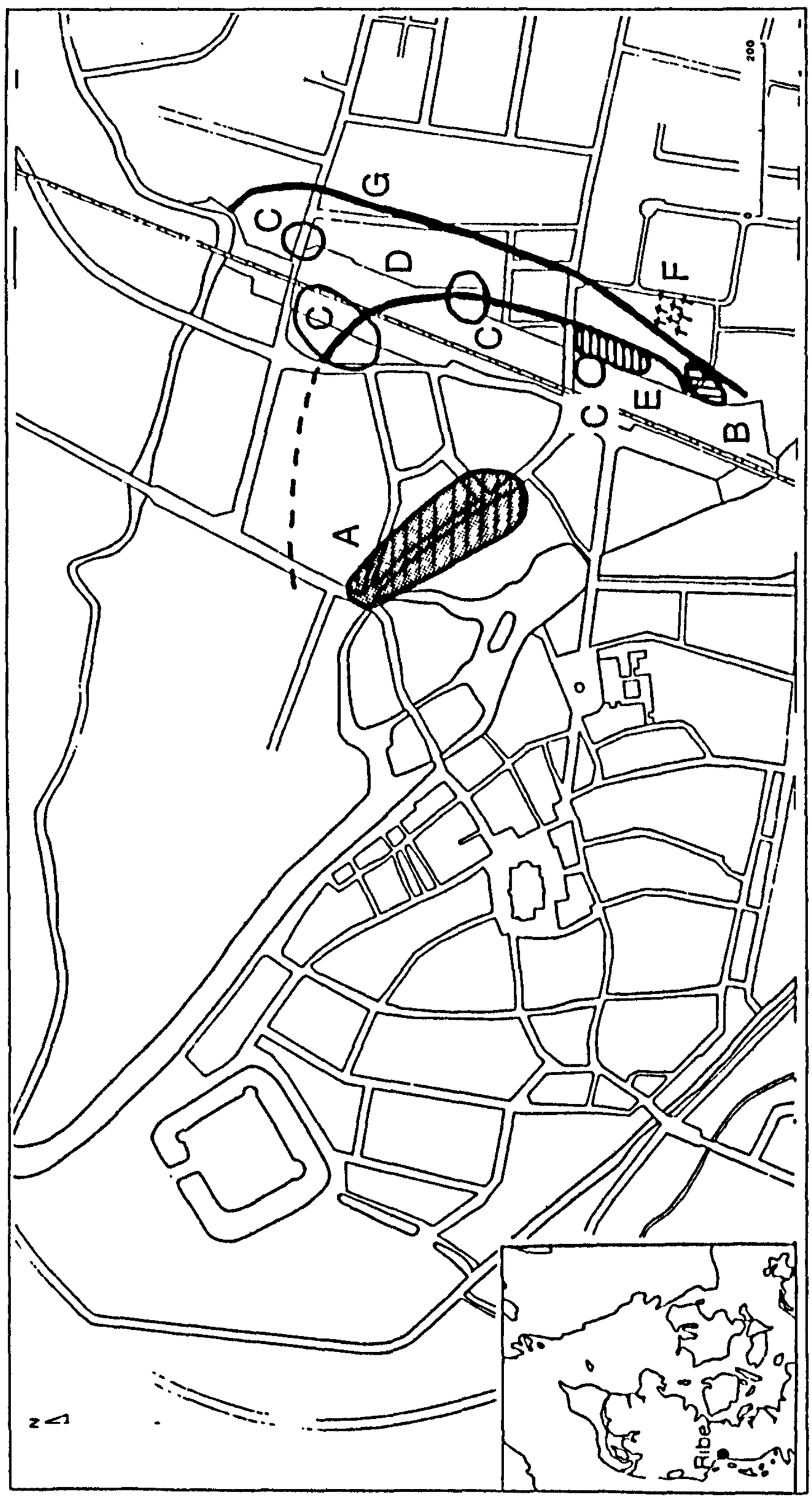

49 – plan of Ribe (Feveile 1994, 92)

A: Market place, 8th-9th centuries. B: Permanent settlement, 8th century. C: Cemeteries, 8th century. D:Town ditch, first half 9th century. E: Turf bank, 9th century. F: Christian graves, 10th century. G: Fortification, 11th century.

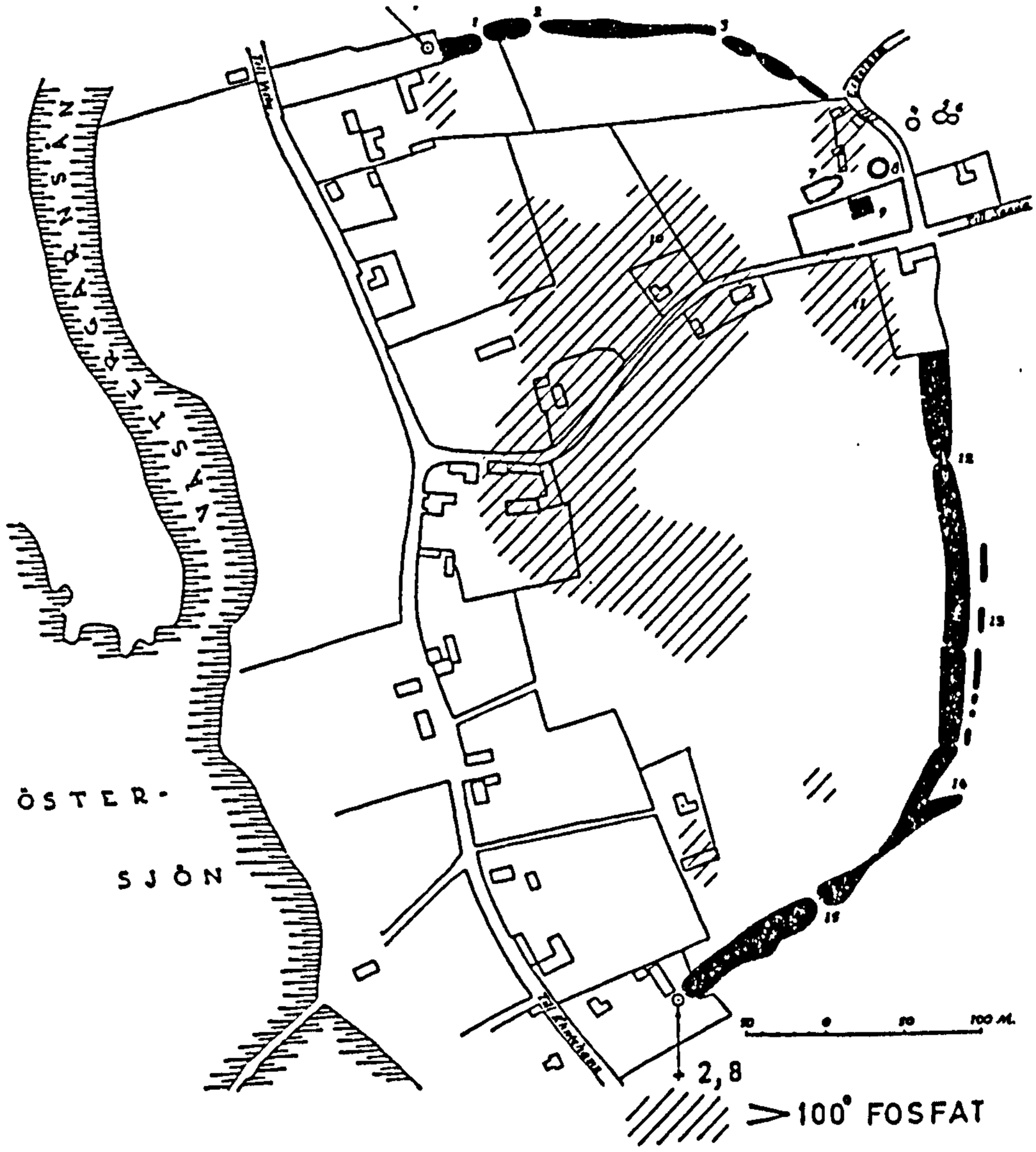

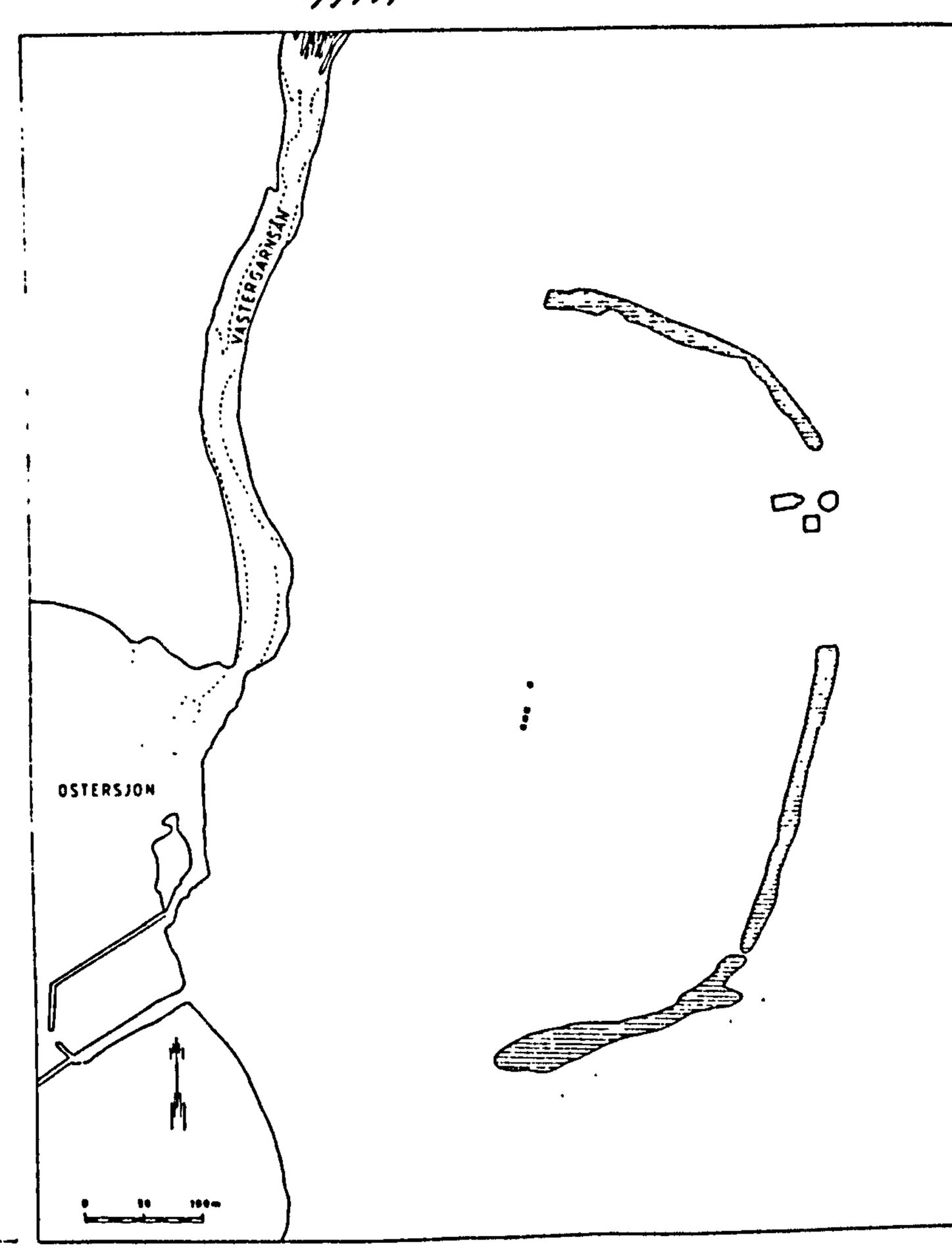

50 – Location map and plan of Västergarn (Lundström 1981, 8, 14, 35)

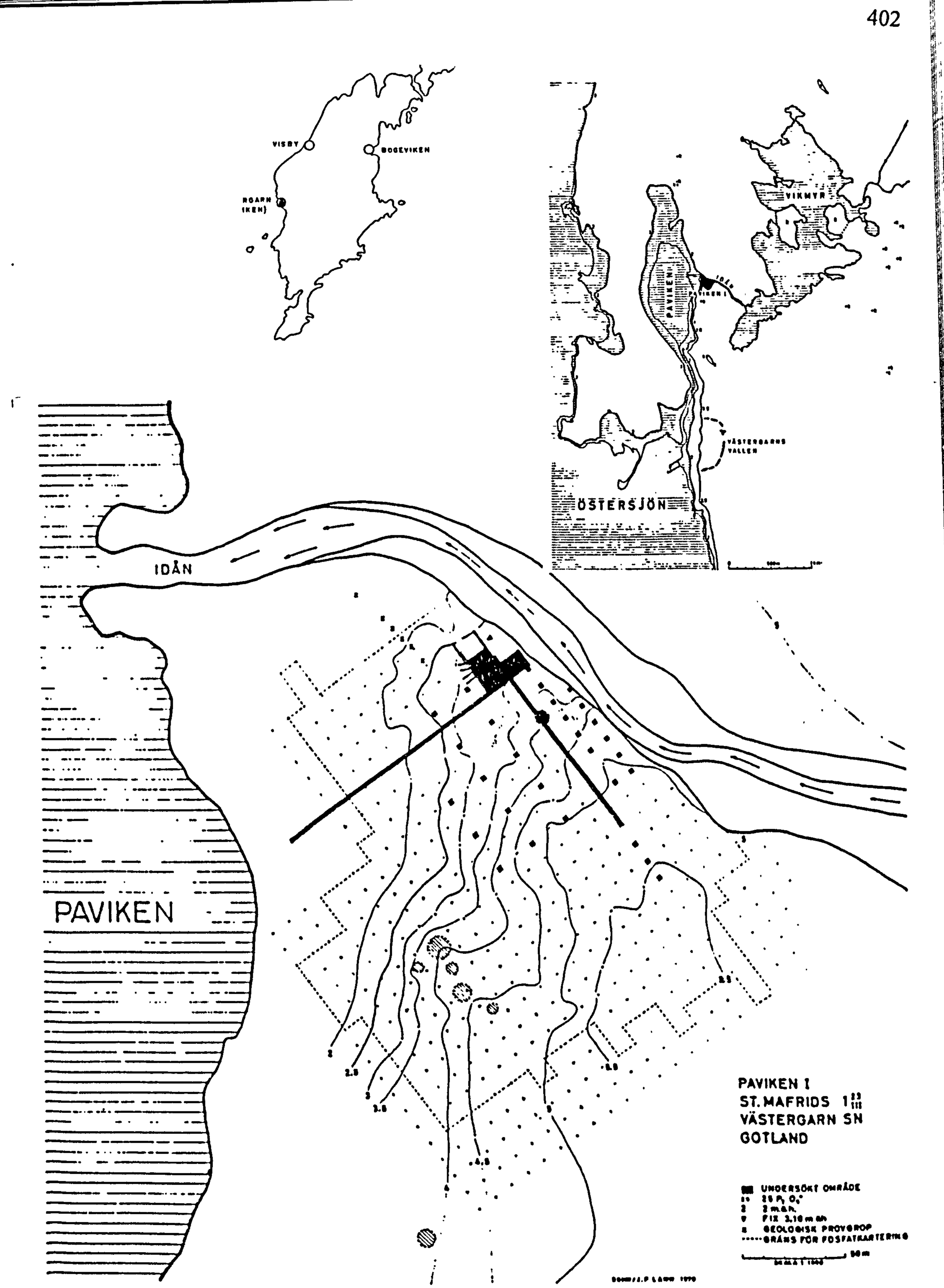

51 – Plan of excavations at Paviken (Elfwendahl 1989, 13)

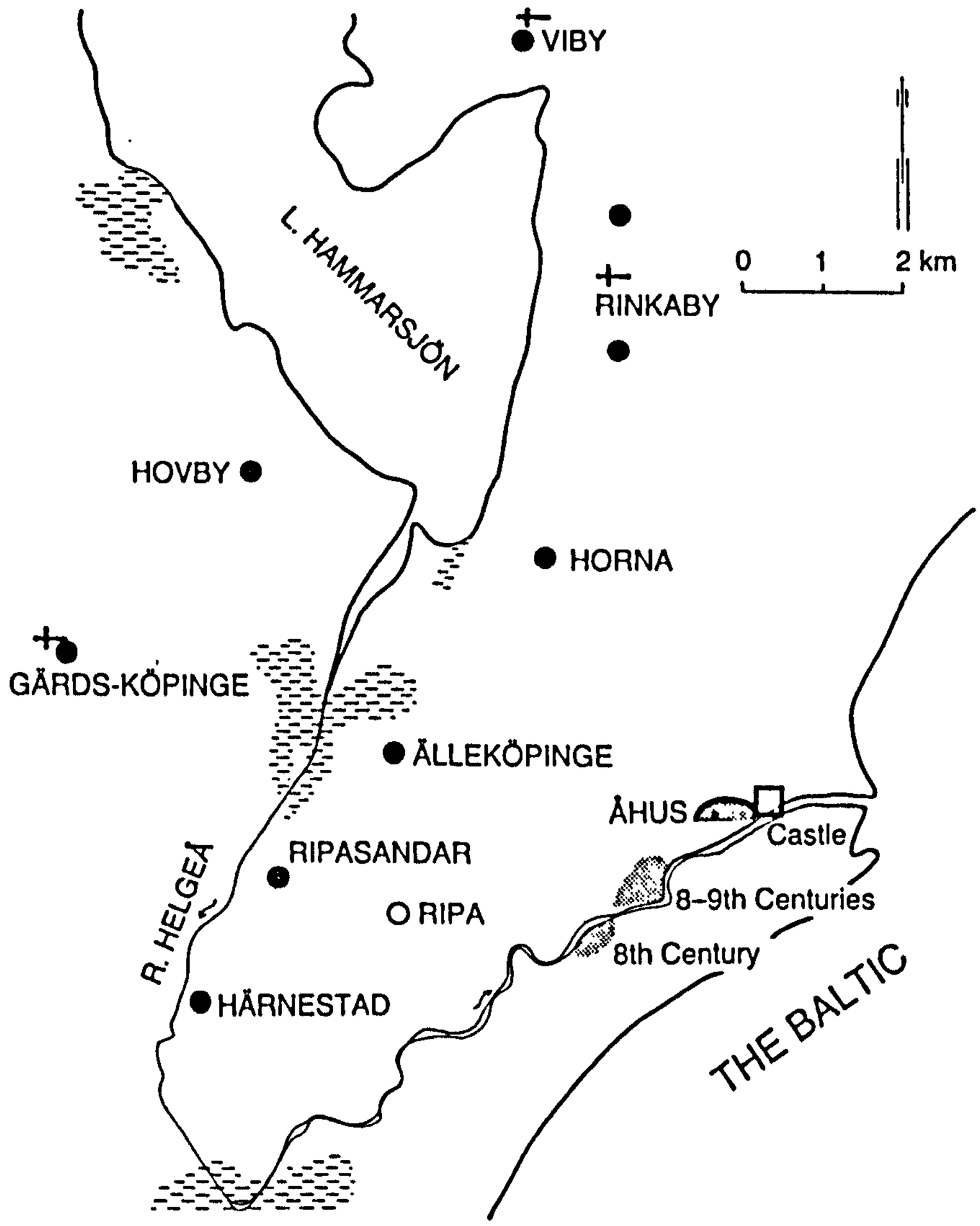

52 – Location map of Åhus (Clarke & Ambrosiani 1991, 54)

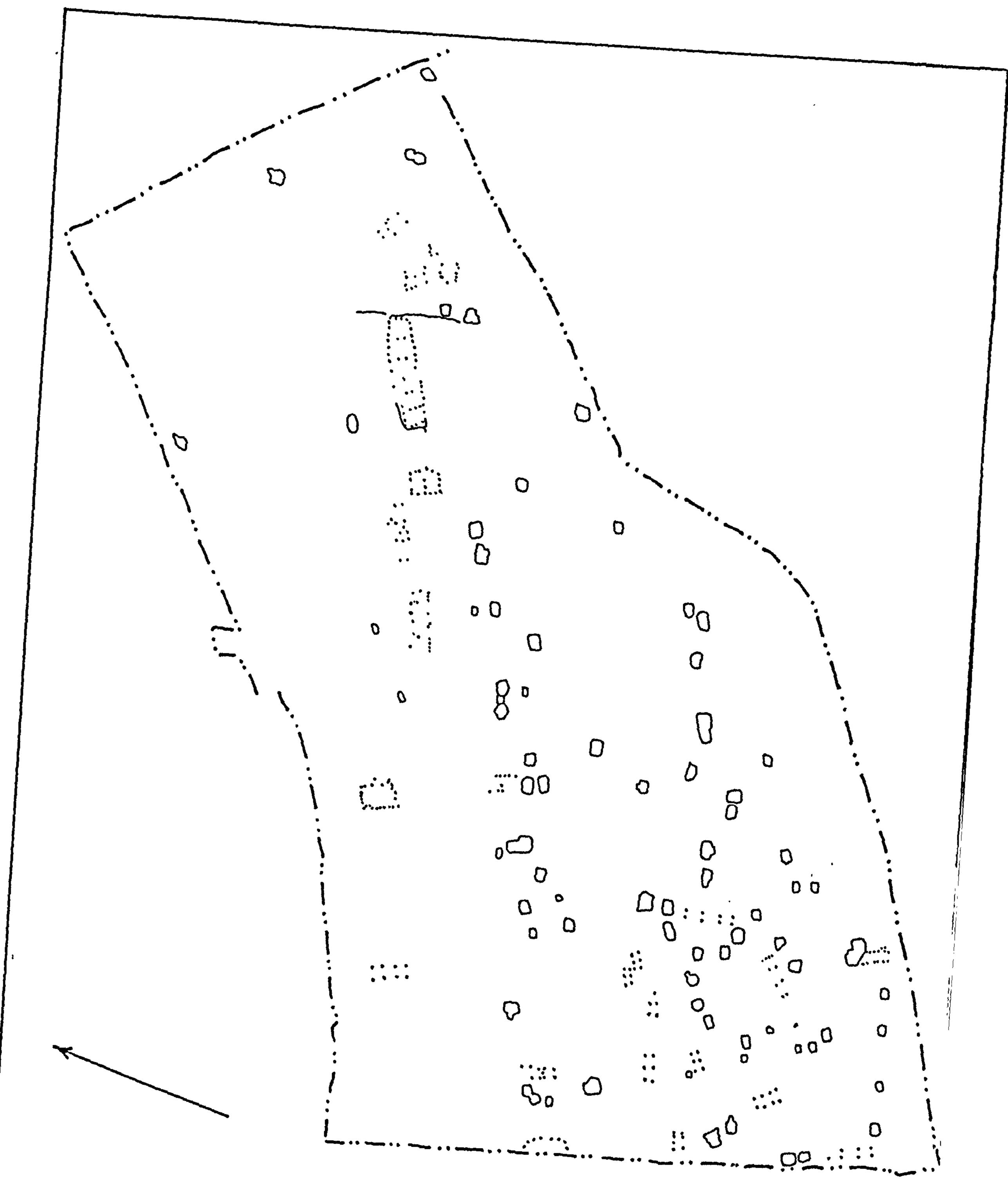

53 – Excavation plan of Åhus (after Ericson-Borggren 1993, 10)

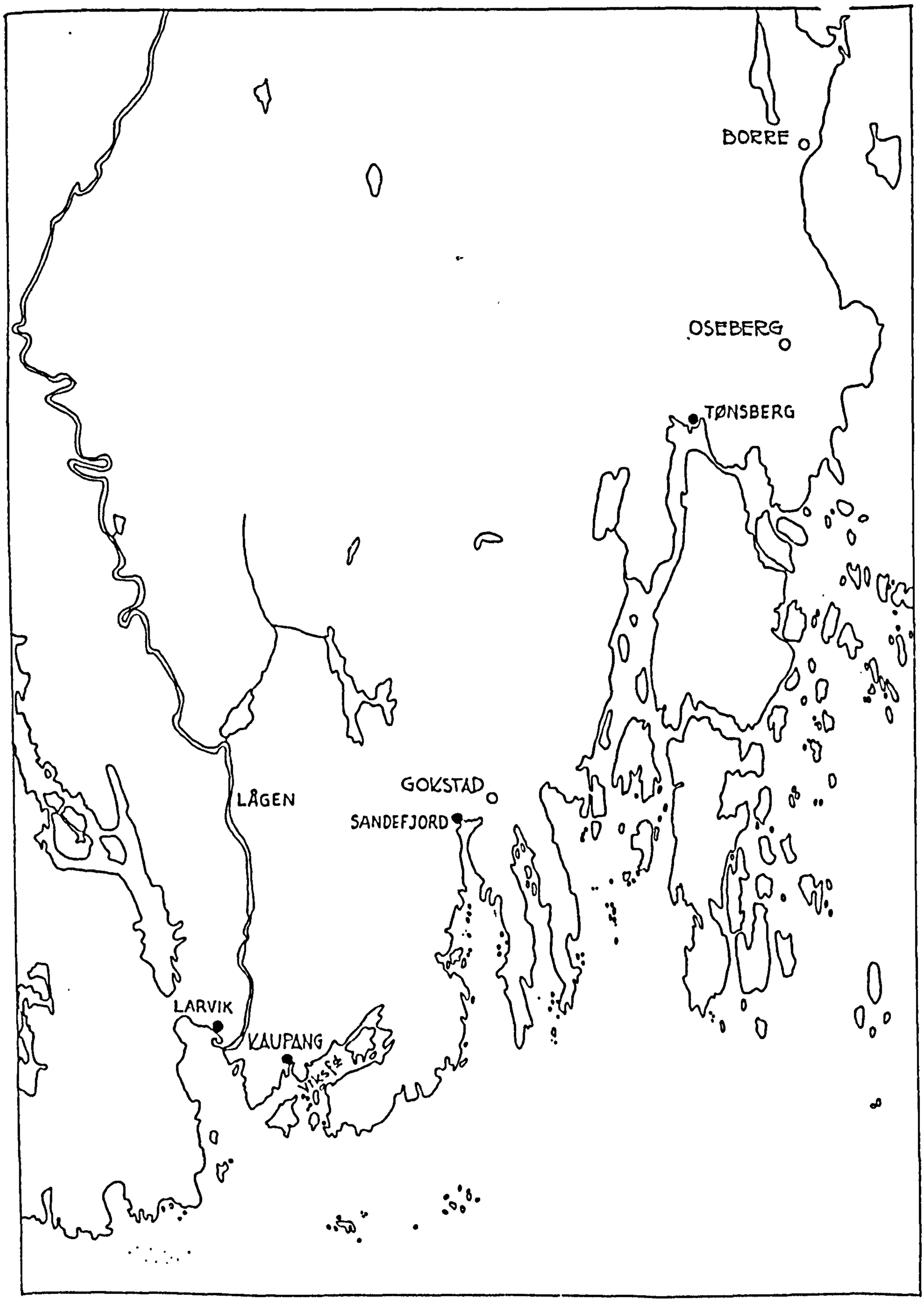

54 – Location map of Kaupang (Blindheim 1975, 126)

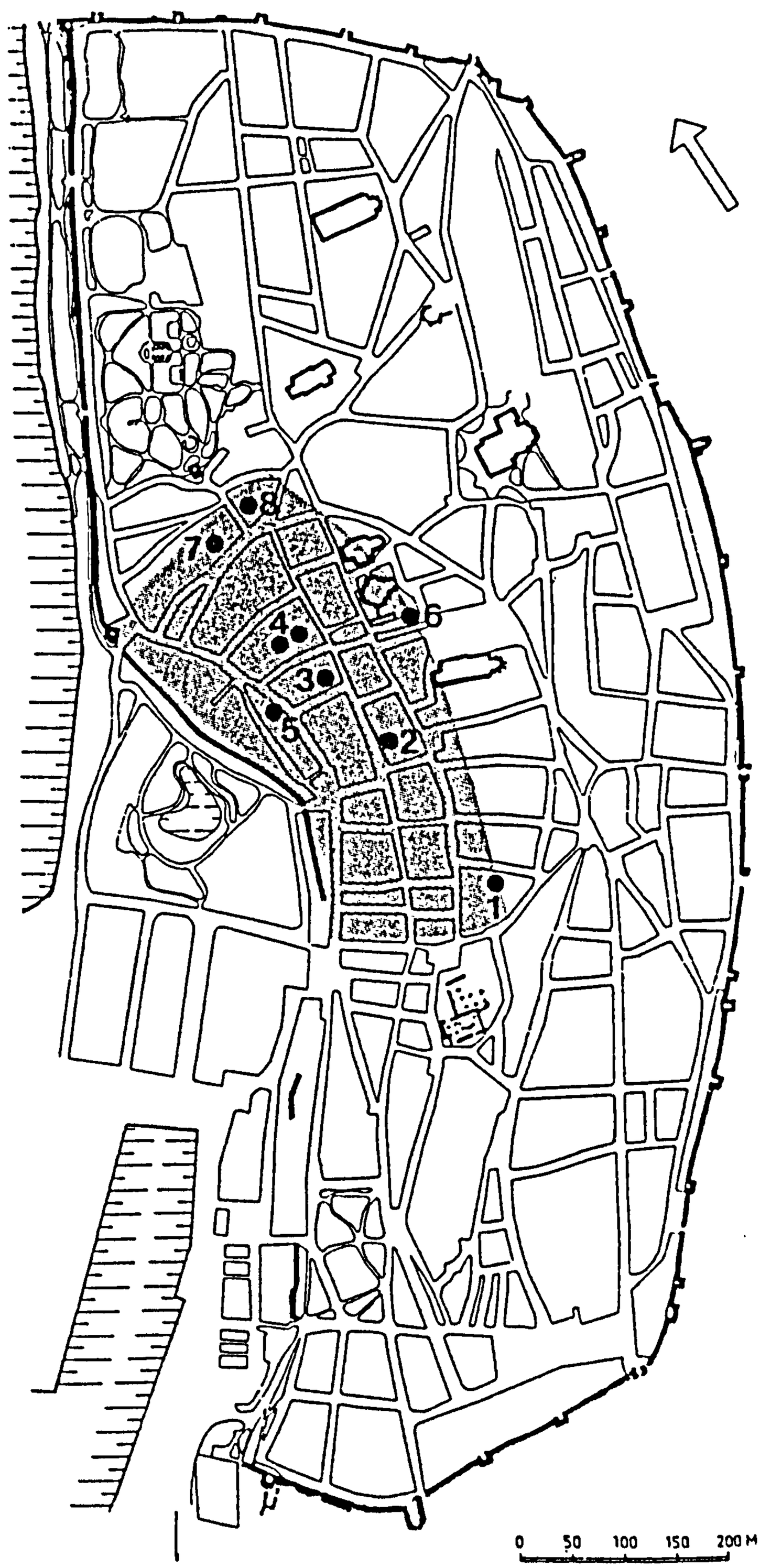

1) Gråbrodern district 2) Rådhuset district 3) Kompaniet district 4) Apoteket district) 5) Kalvskinnet district) 6) Stora Torggränd 7) Specksrum district 8) Säcken district

55 –Town plan of Visby (Westholm 1985, 296)

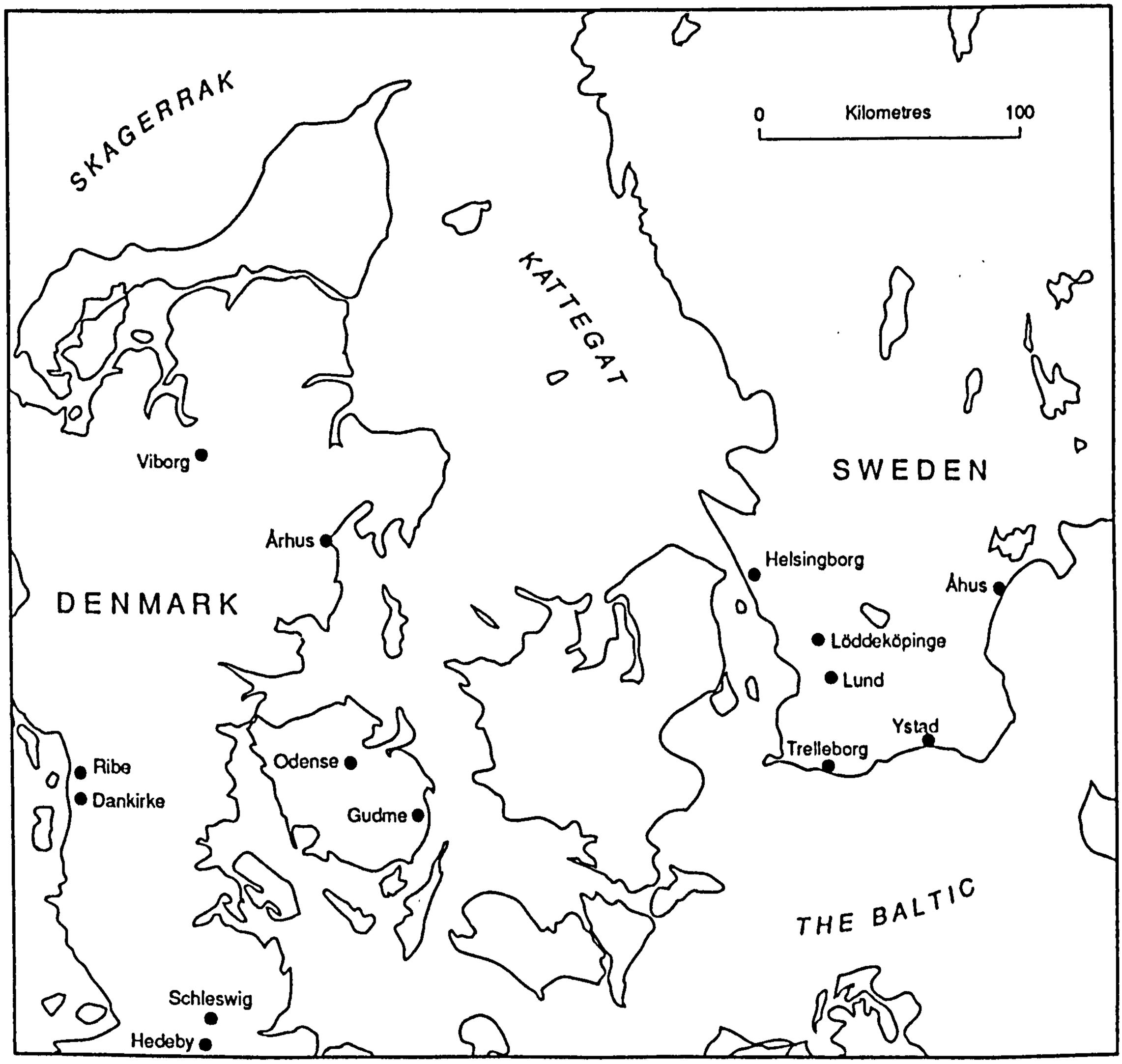

56 – Location map of Löddeköpinge (Clarke & Ambrosiani 1991, 52)

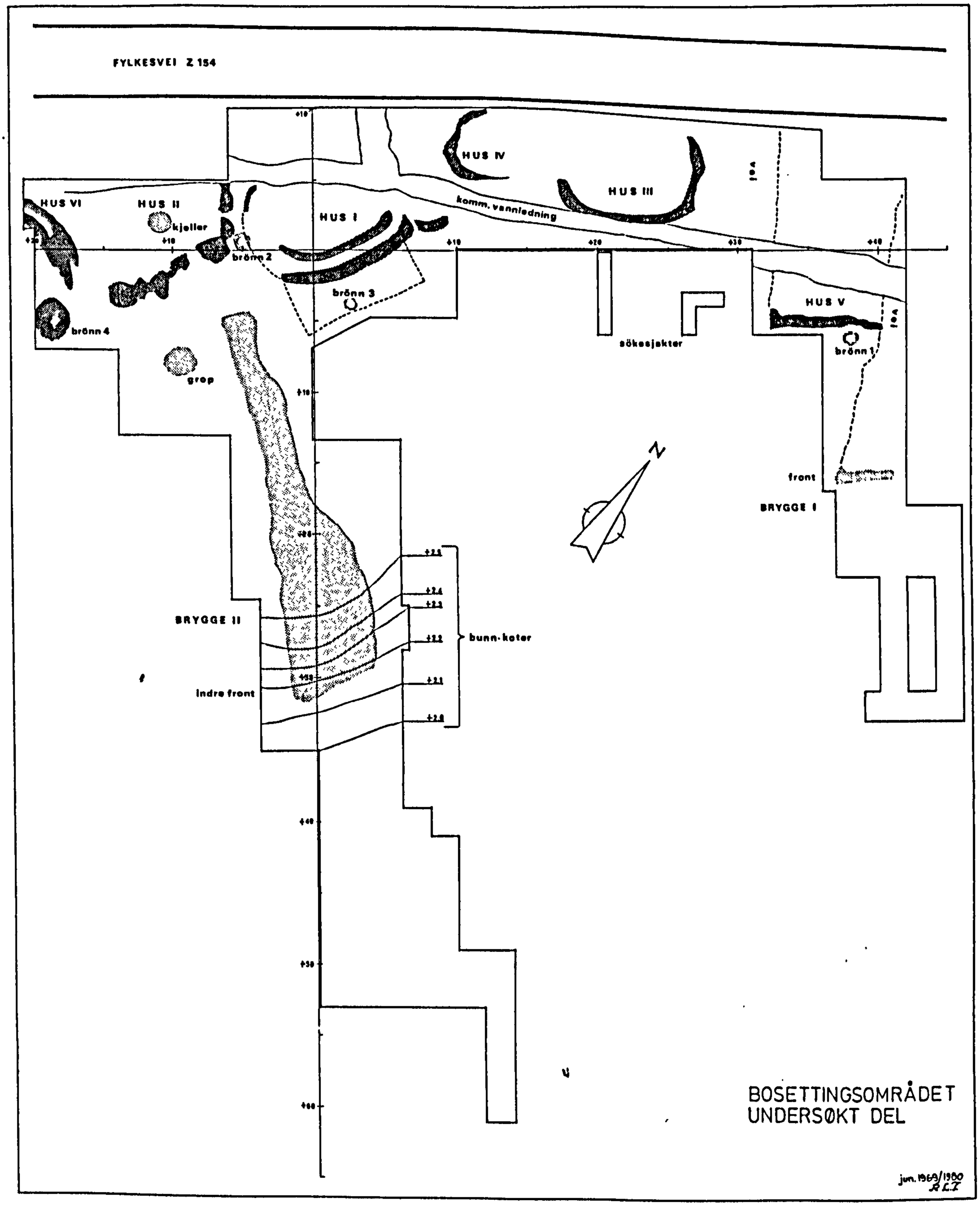

57 – Plan of excavations at Kaupang (Blindheim 1981, 20)

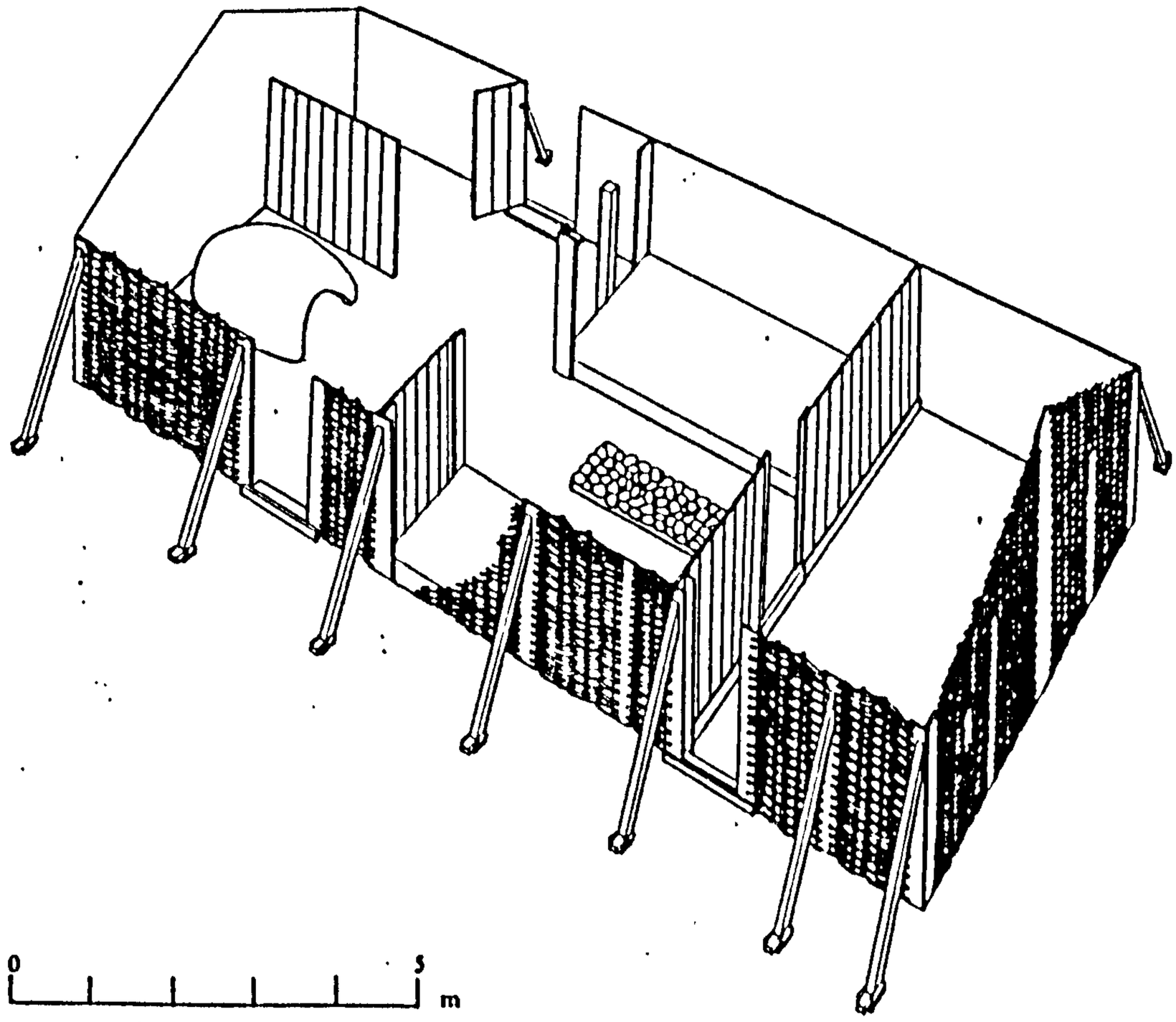
0
5
m

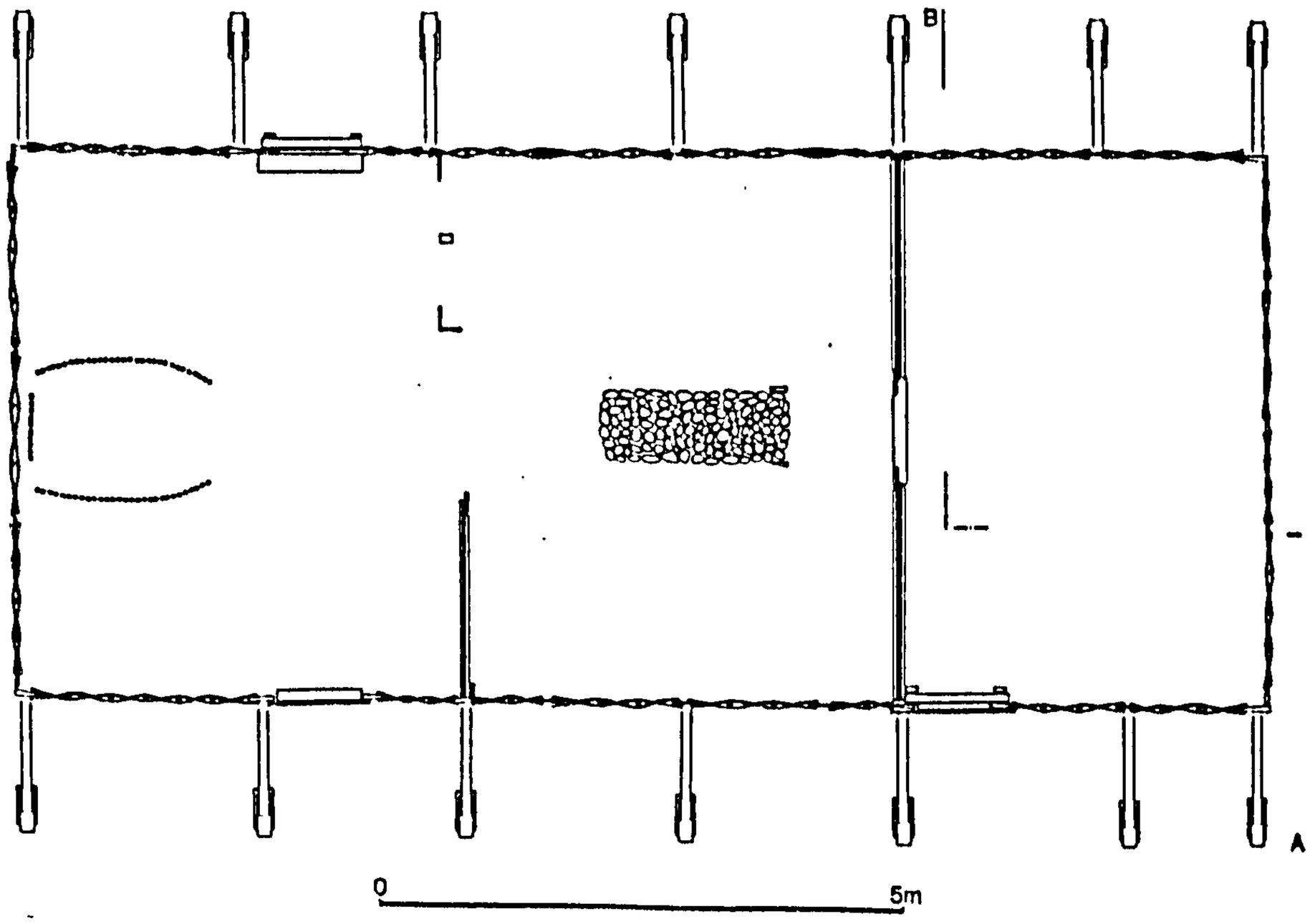
B
A
0
5m

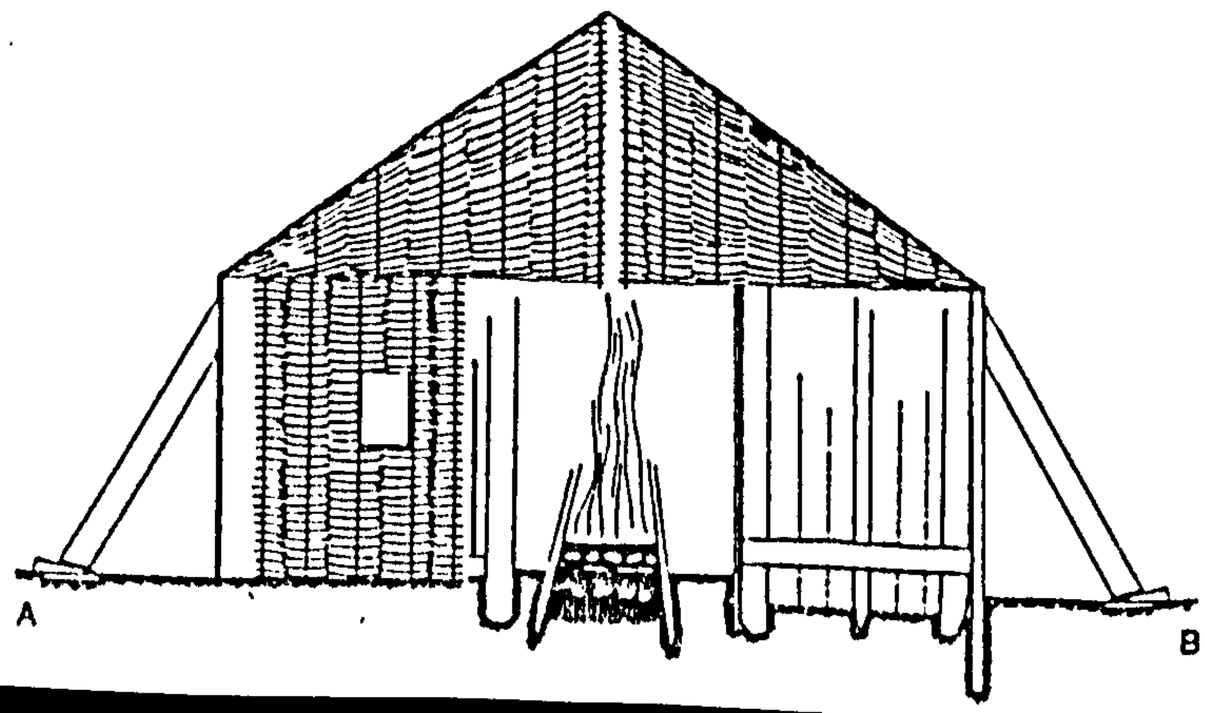
A
B

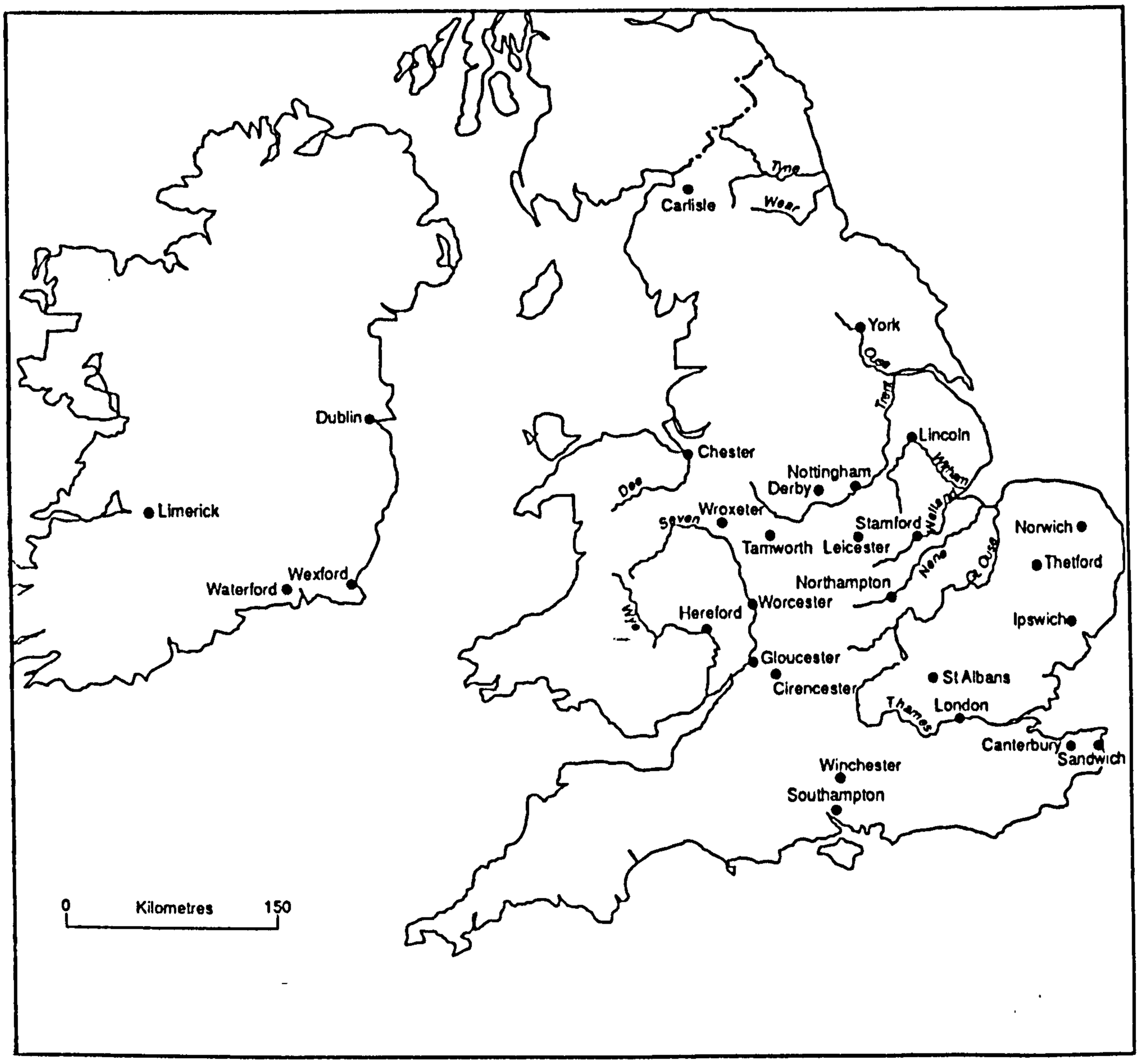

59 – Location map of York (Clarke & Ambrosiani 1991, 9)

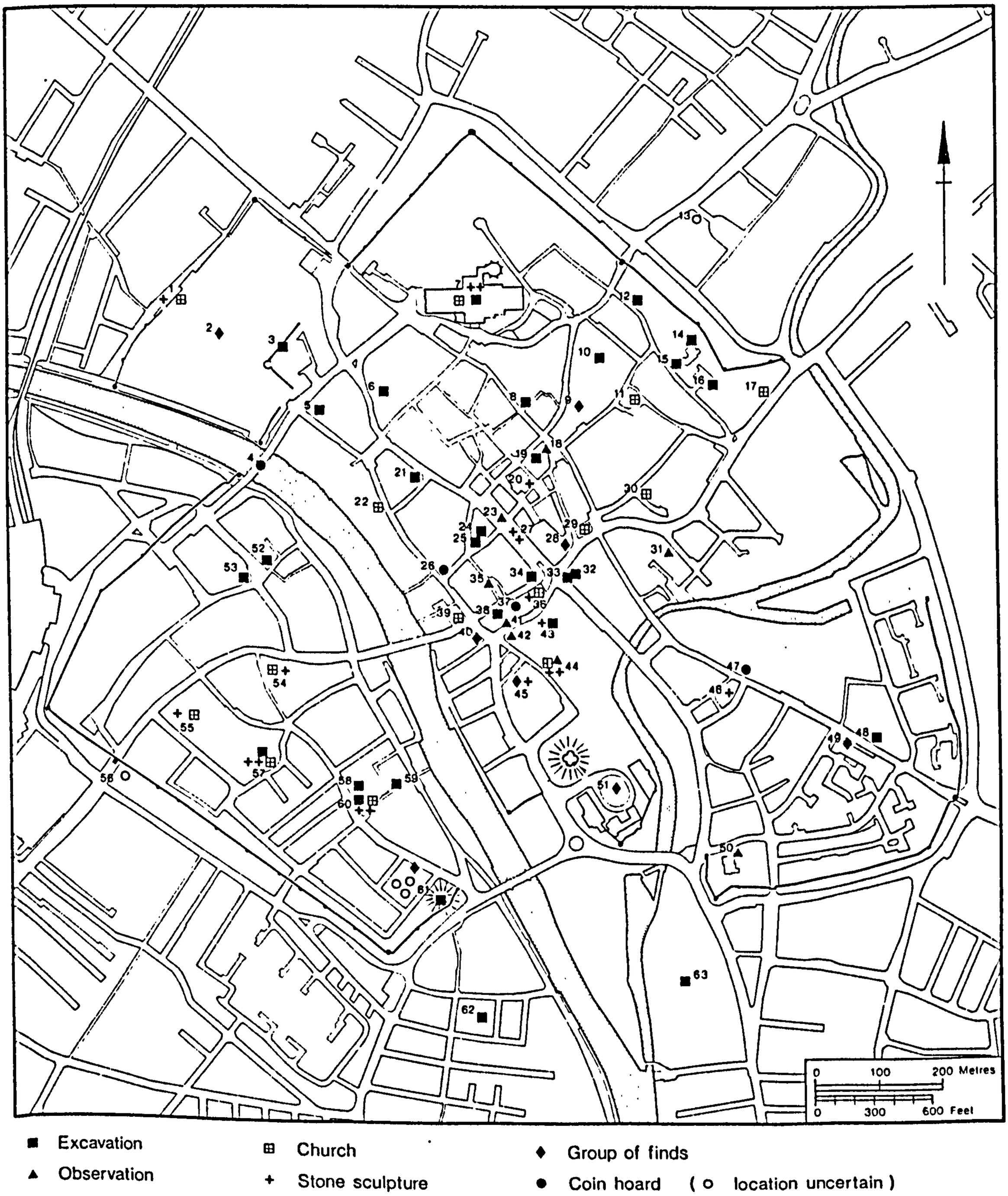

60 – Detailed town plan of York – site locations (Moulden & Tweddle 1986, 2)

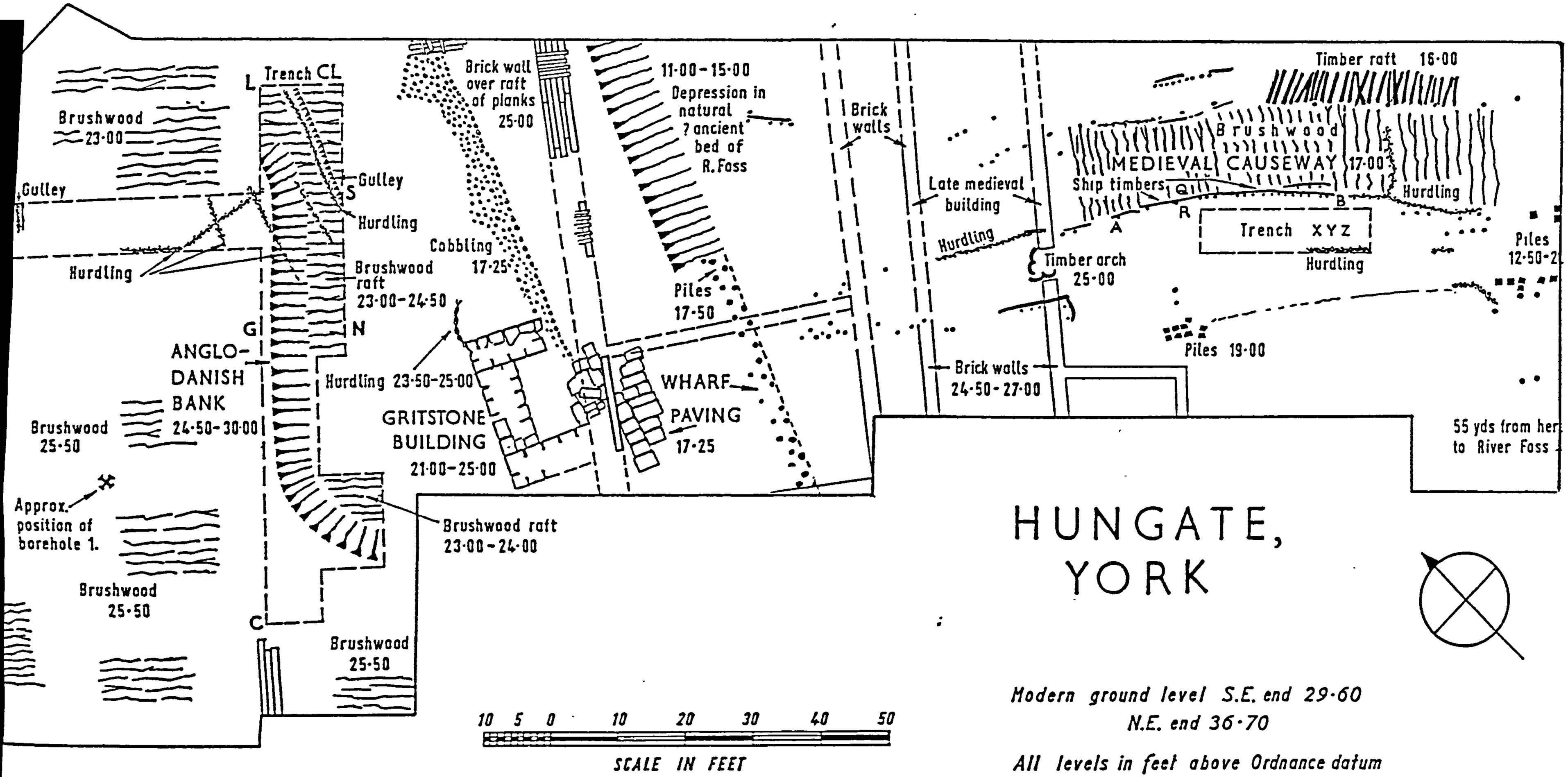
Trench CL
L
Brushwood 23·00
Gulley
Gulley
S
Hurdling
Hurdling
Brushwood raft 23·00–24·50
G
N
ANGLO-DANISH BANK 24·50–30·00
Brushwood 25·50
Approx. position of borehole 1.
Brushwood 25·50
C
Brushwood 25·50
Brick wall over raft of planks 25·00
Cobbling 17·25
Hurdling 23·50–25·00
GRITSTONE BUILDING 21·00–25·00
11·00–15·00
Depression in natural ? ancient bed of R. Foss
Piles 17·50
WHARF
PAVING 17·25
Brushwood raft 23·00–24·00
Brick walls
Late medieval building
Hurdling
Timber arch 25·00
Brick walls 24·50–27·00
Timber raft 16·00
Brushwood
MEDIEVAL CAUSEWAY 17·00
Ship timbers
Q
A
R
B
Hurdling
Trench XYZ
Hurdling
Piles 19·00
Piles 12·50–2
55 yds from here to River Foss
HUNGATE, YORK
10 5 0 10 20 30 40 50
SCALE IN FEET
Modern ground level S.E. end 29·60
N.E. end 36·70
All levels in feet above Ordnance datum

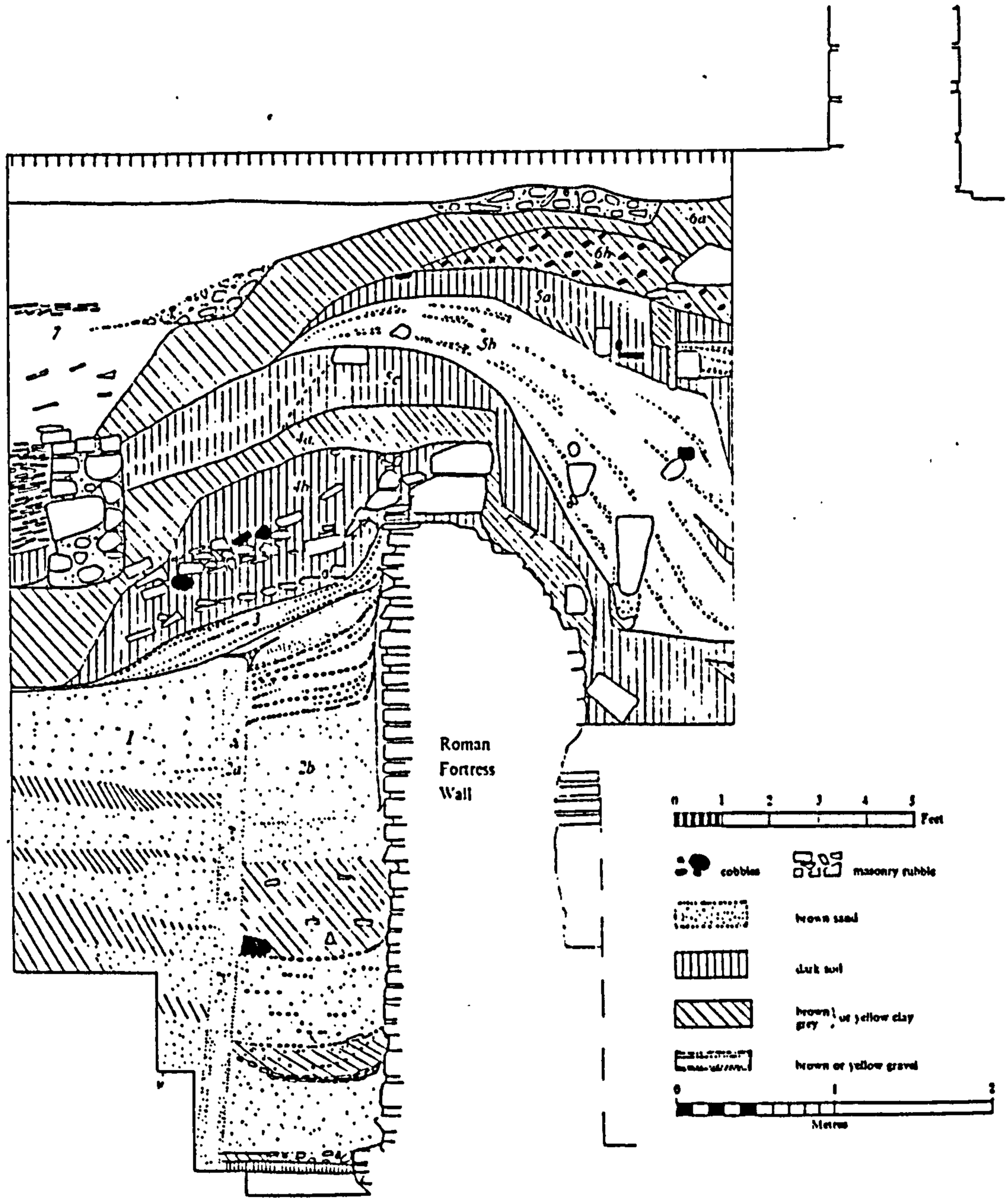

62 – Section through the defences at the Anglian Tower (Radley 1972, 47)

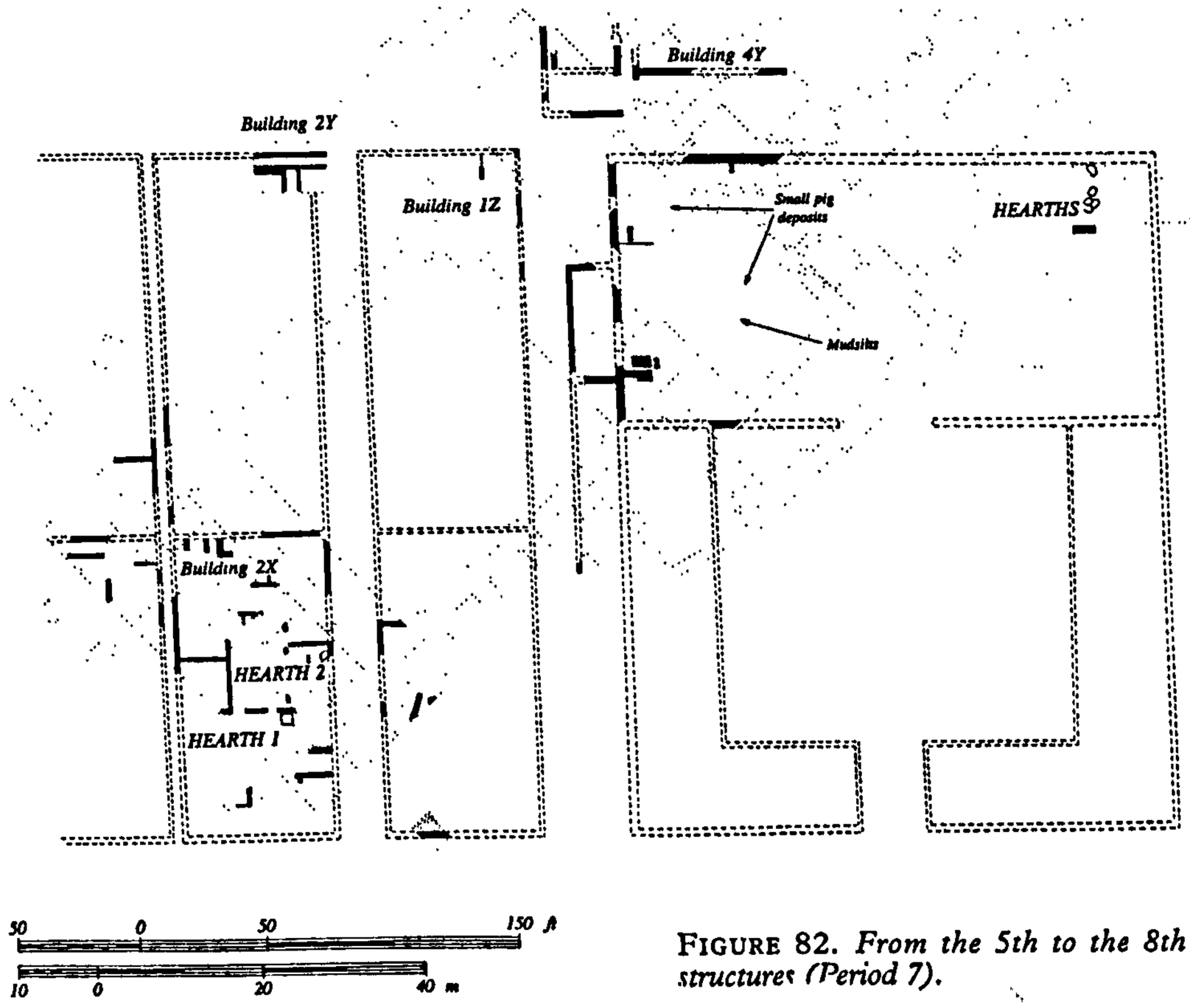

FIGURE 82. *From the 5th to the 8th century: structures (Period 7).*

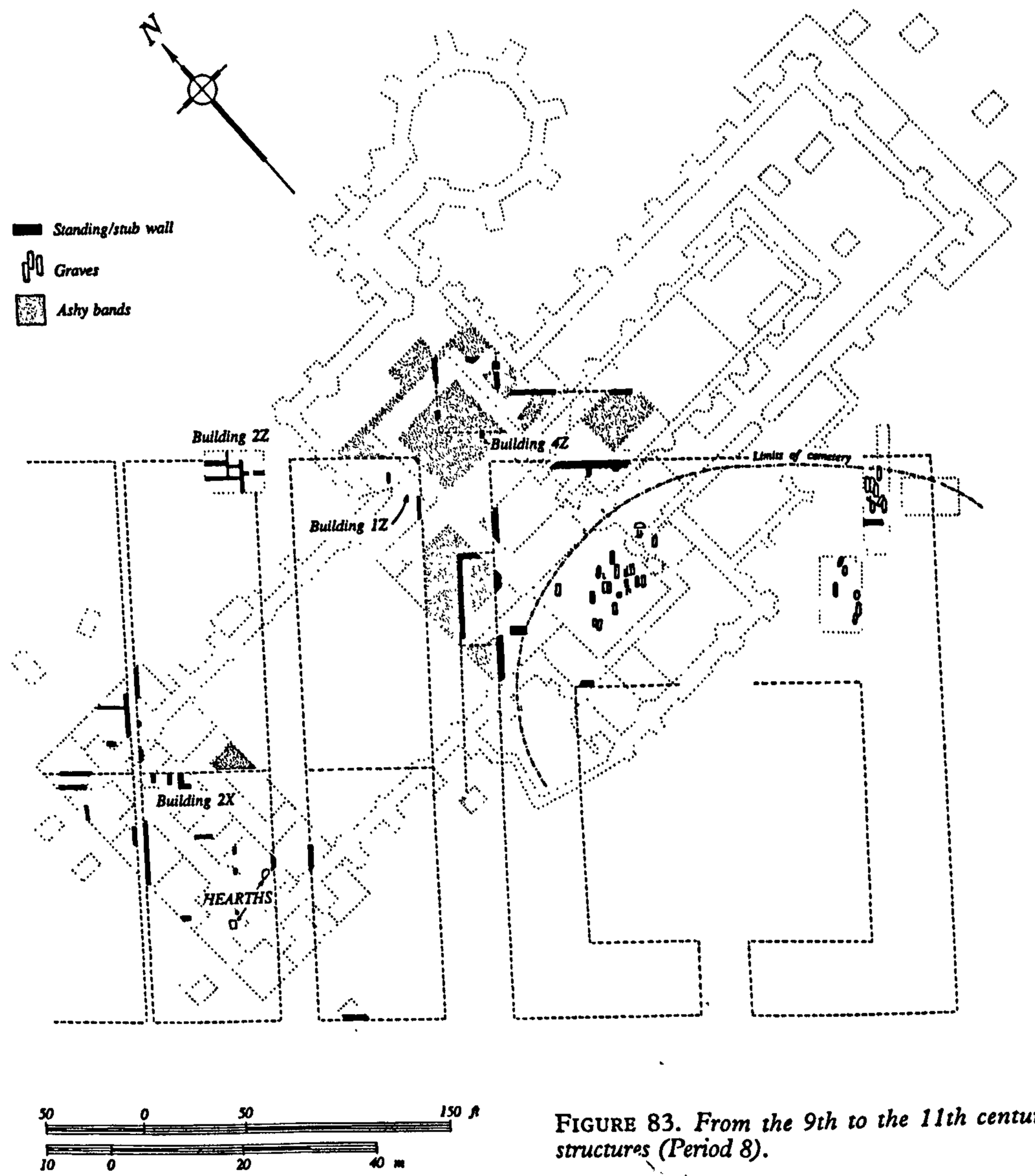

FIGURE 83. *From the 9th to the 11th century: structures (Period 8).*

63 – Plan of Minster excavations (Phillips & Heywood 1995, 187 + 192)

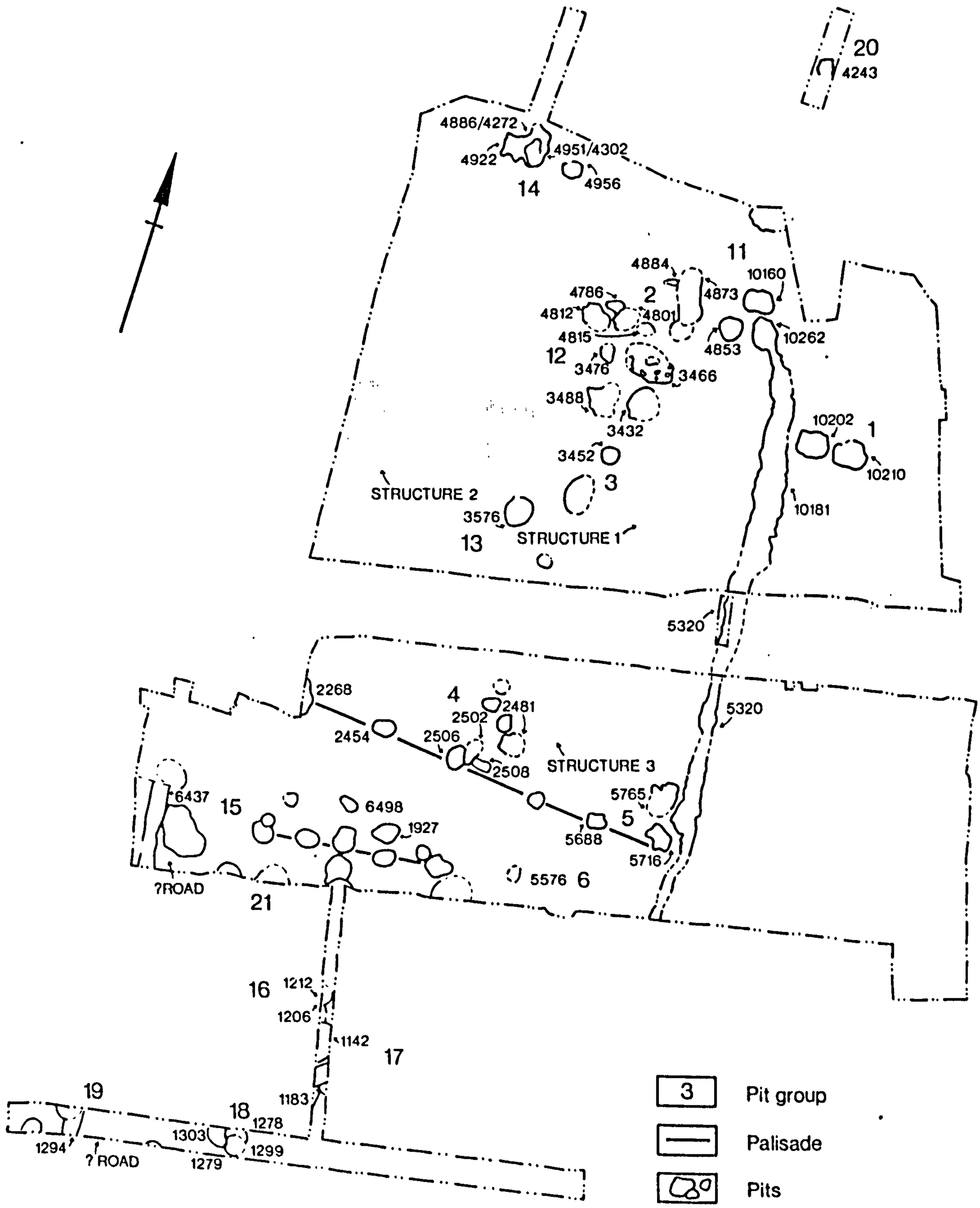

64 – Plan of Fishergate excavations (Kemp 1996, 38)

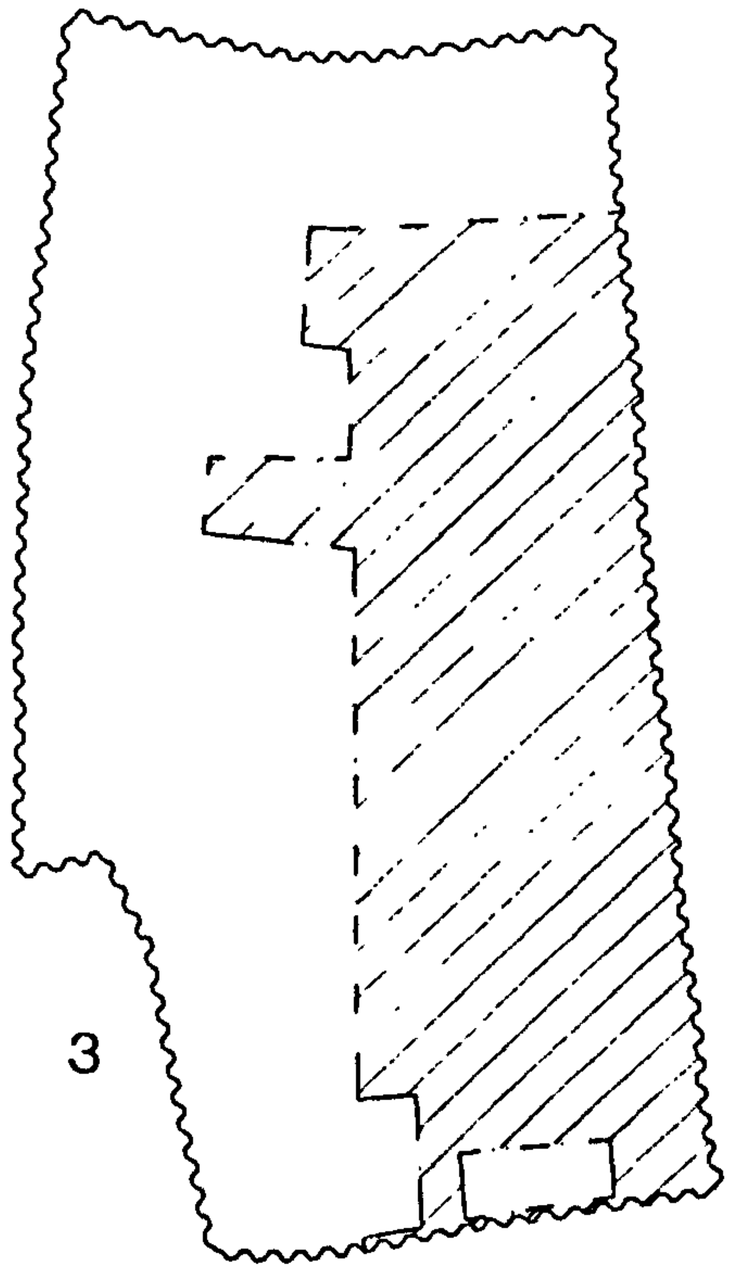
3

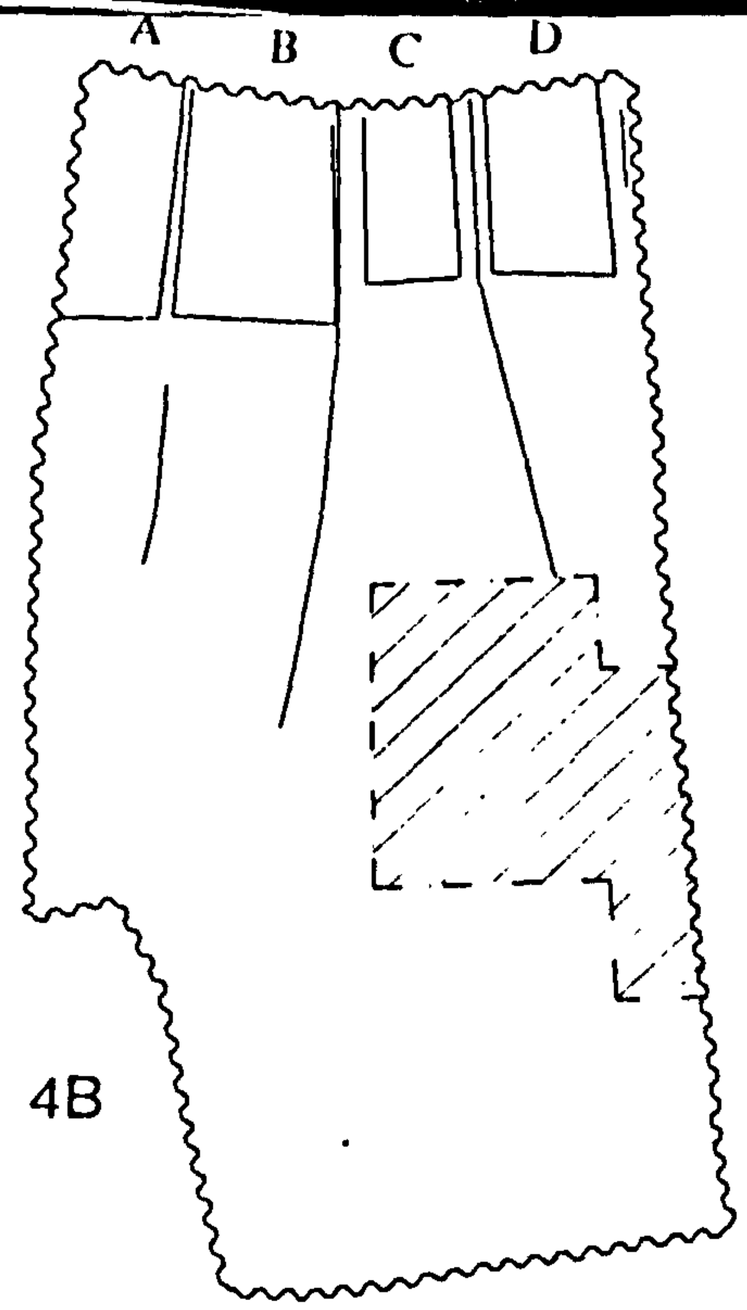
A
B
C
D
4B

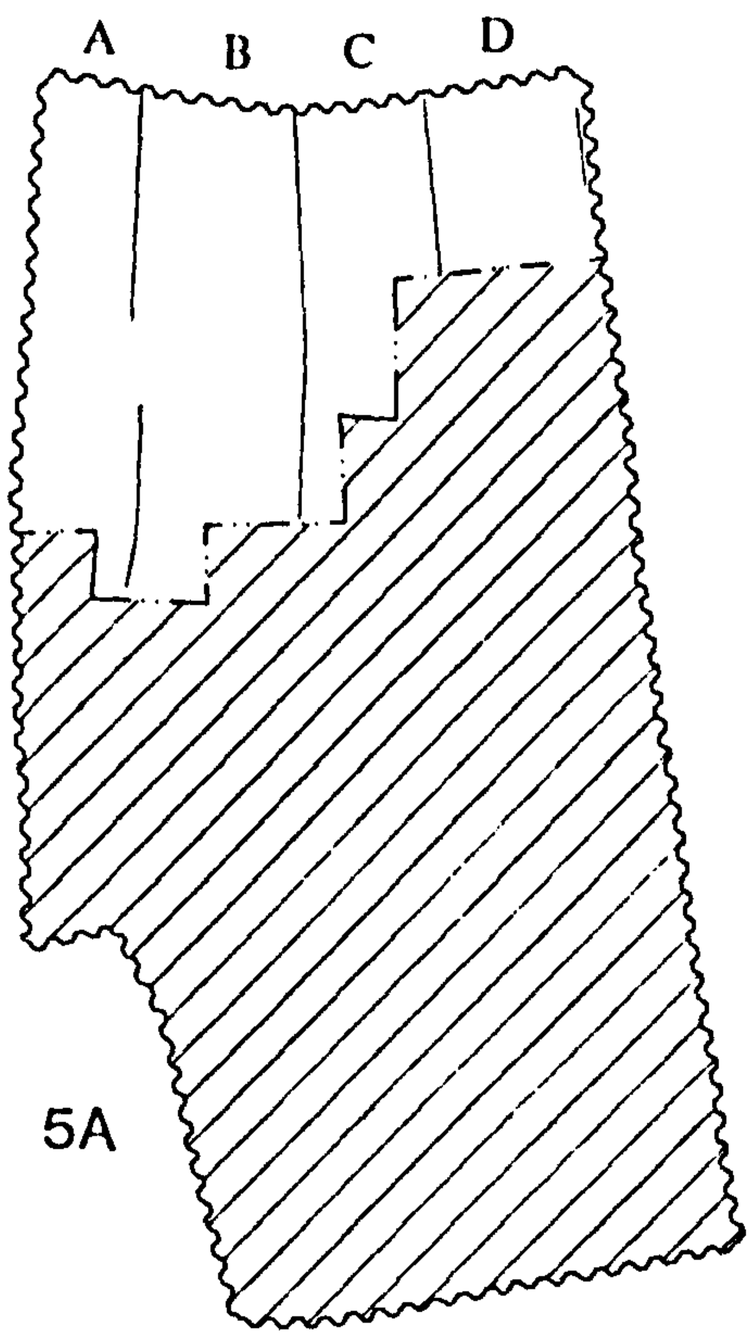
A
B
C
D
5A

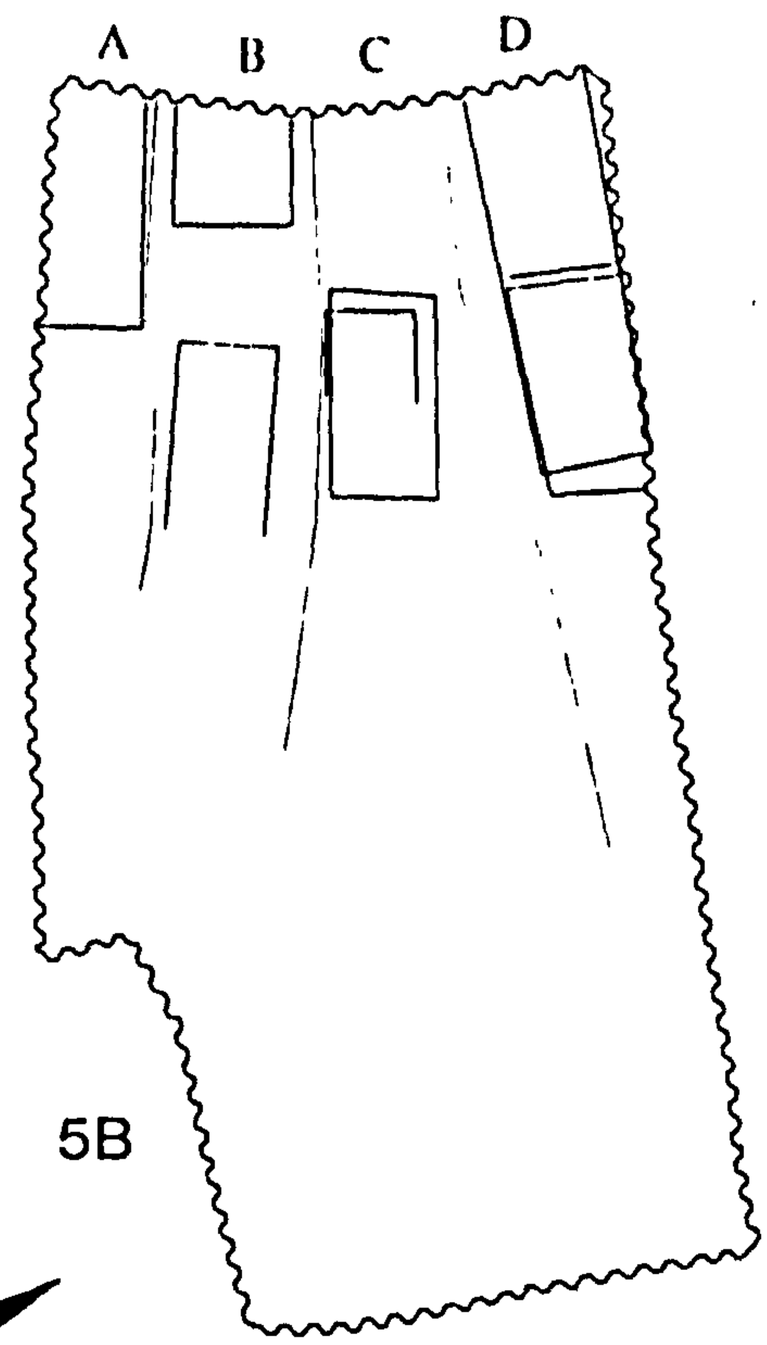
A
B
C
D
5B

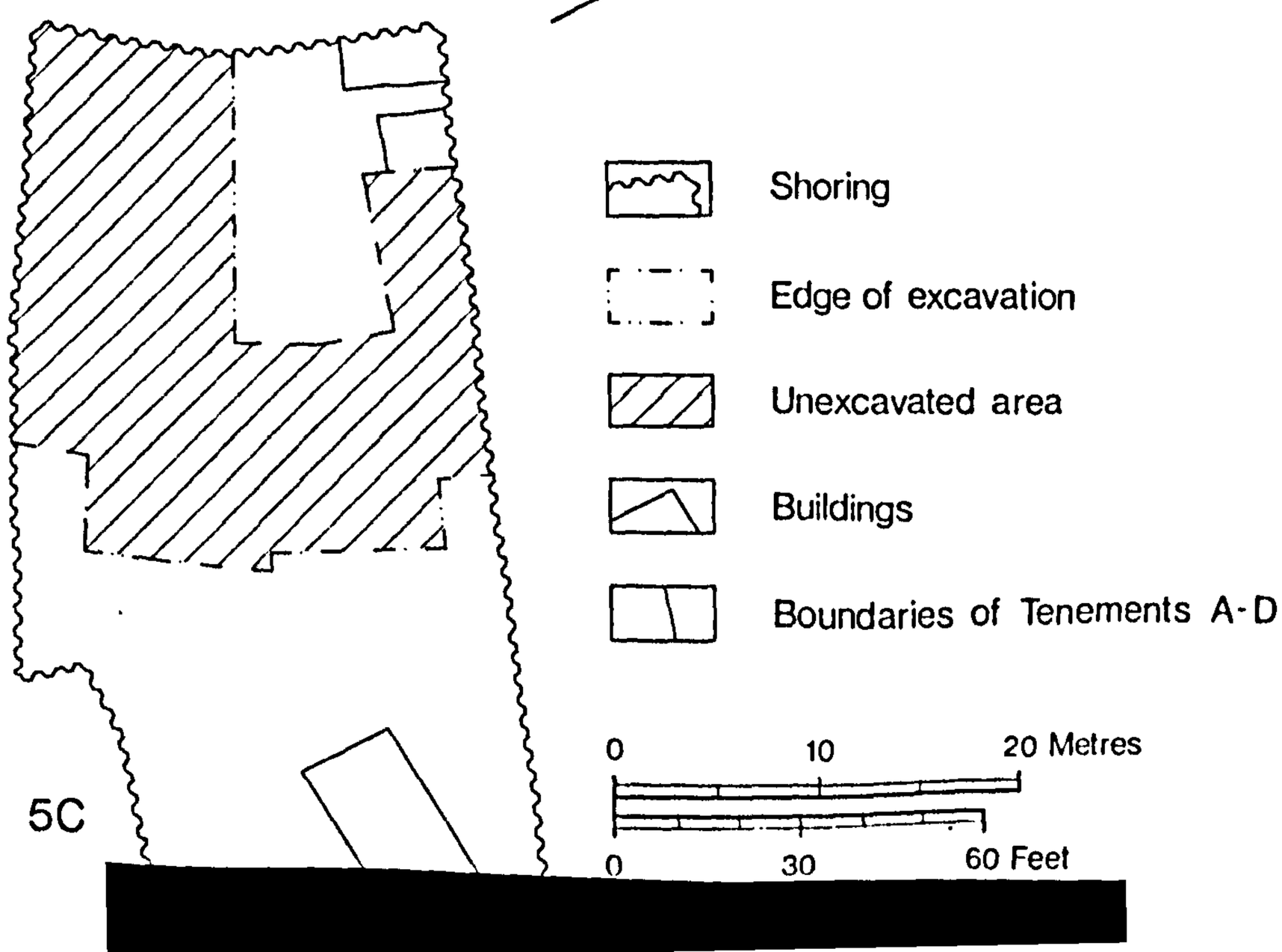
Shoring
Edge of excavation
Unexcavated area
Buildings
Boundaries of Tenements A-D
0
10
20 Metres
0
30
60 Feet
5C

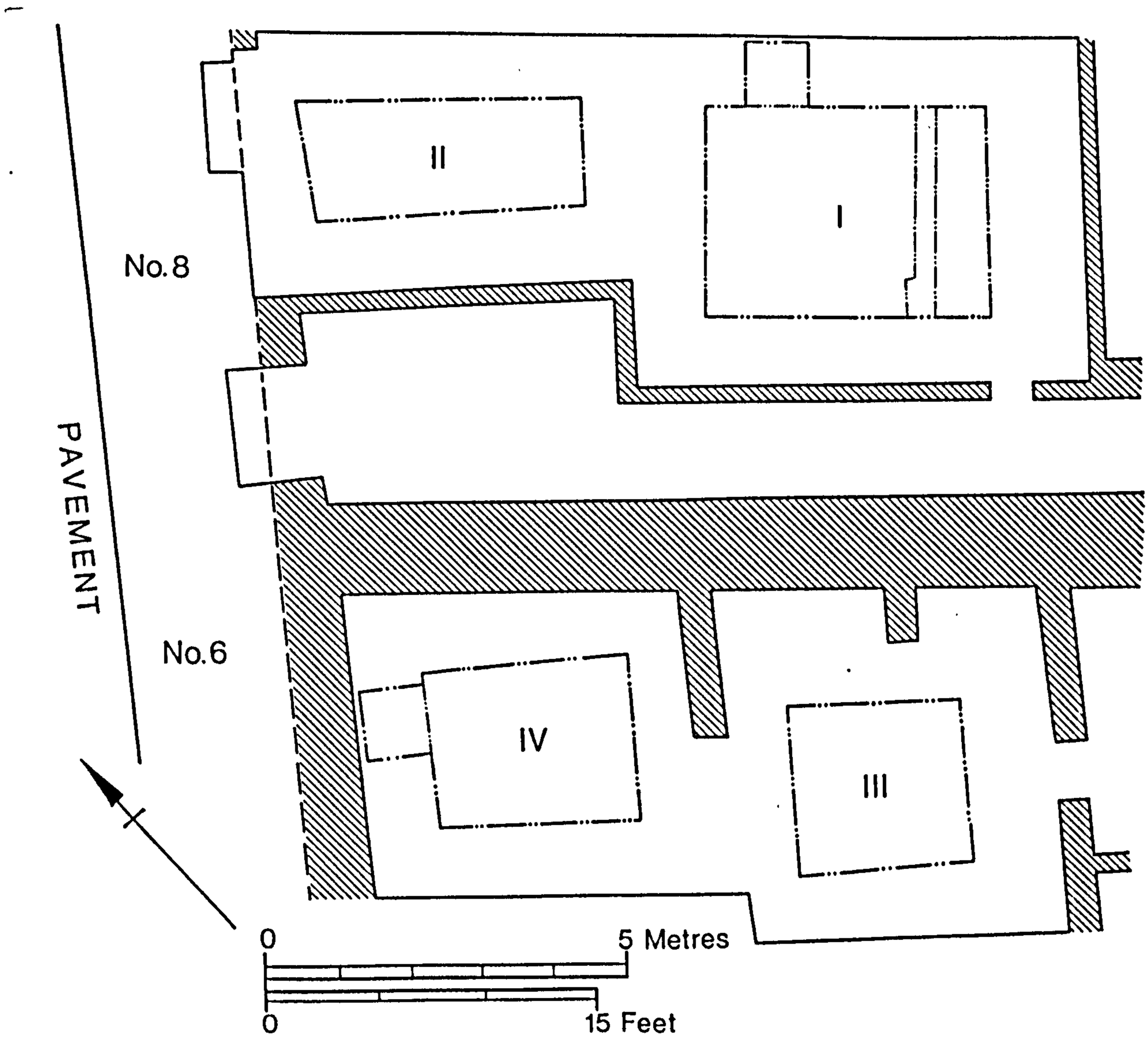

66 – Site plan of excavations on 6-8 Pavement (Addyman & Hall 1991, 184)

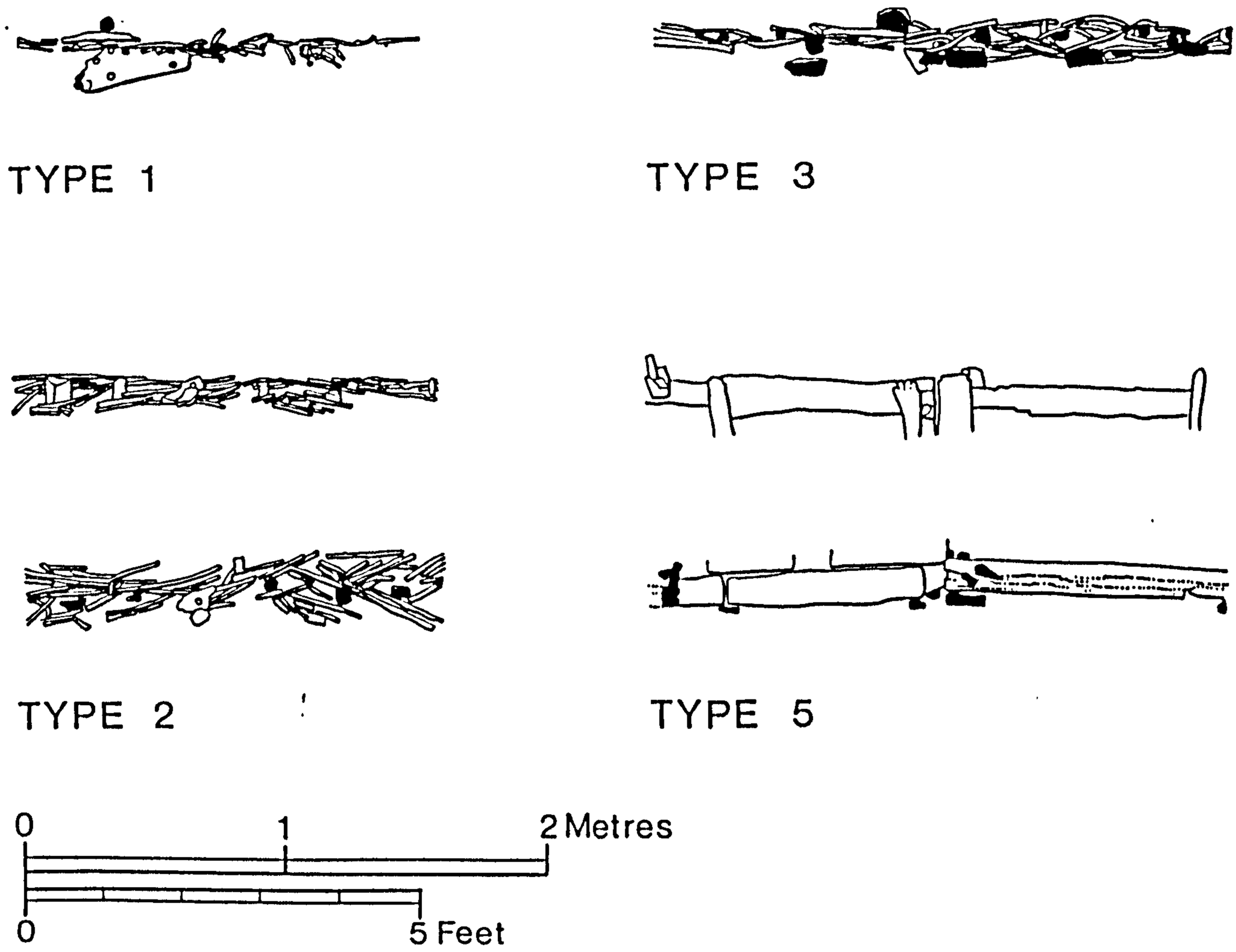

67 – Wall building techniques from sites in York (Oakey 1991, 232)

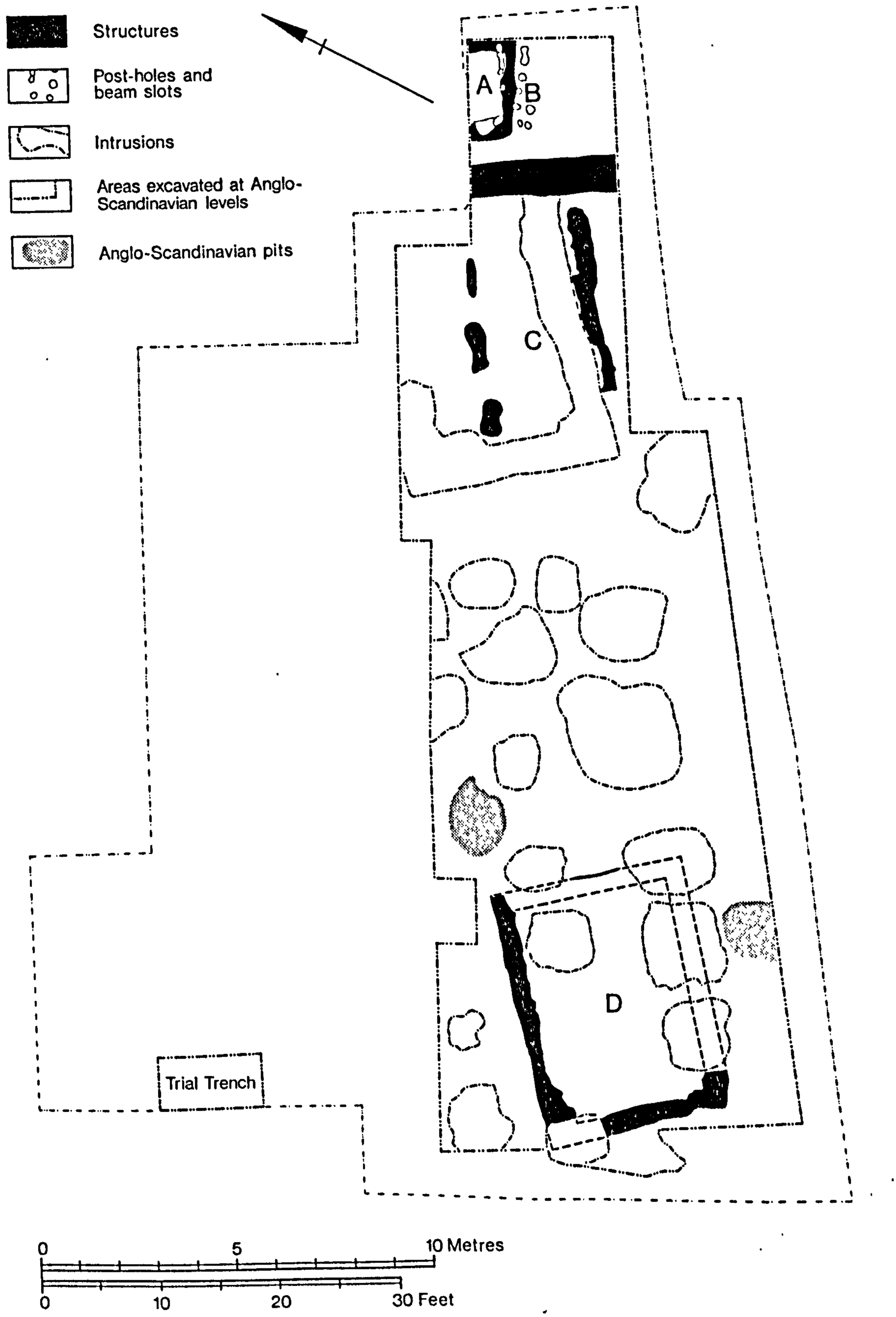

68 – Site plan of excavations at Skeldergate (Donaghey 1986, 40)

69 – Viking Age rural buildings (Becker et al. 1980, pl. 1)

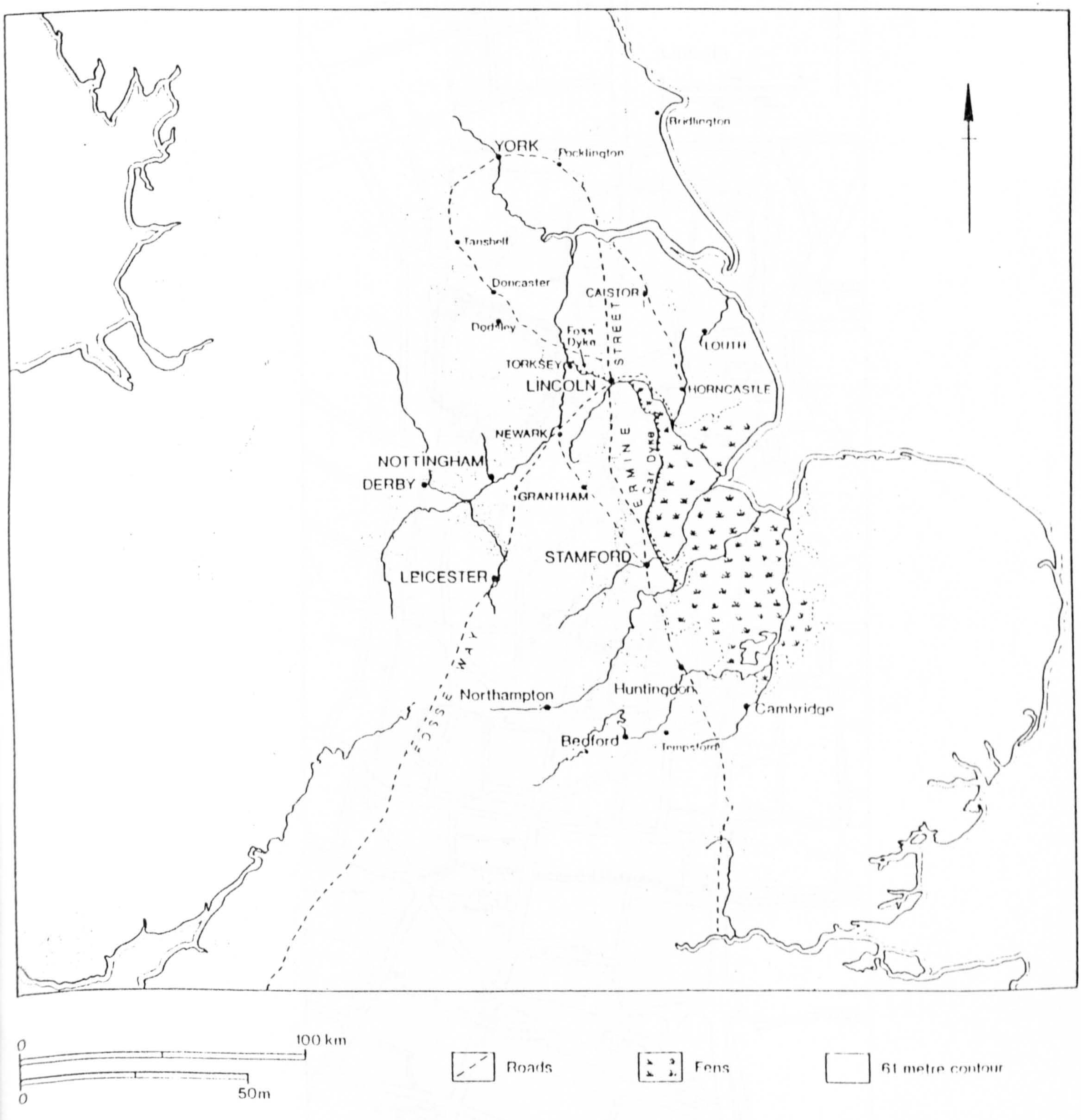

70 – Map of the Danelaw (Hall 1989, 151)

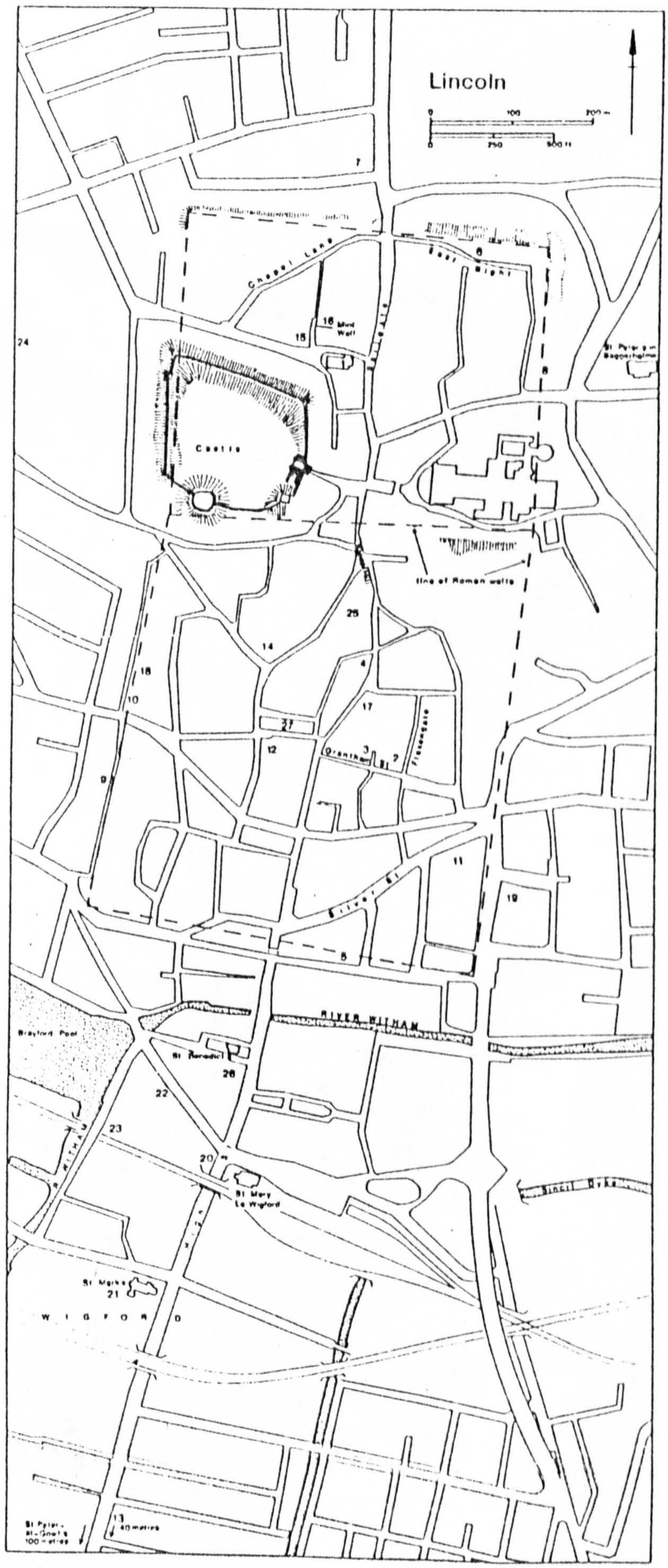

71 – Map of Lincoln with site locations (Hall 1989, 170)

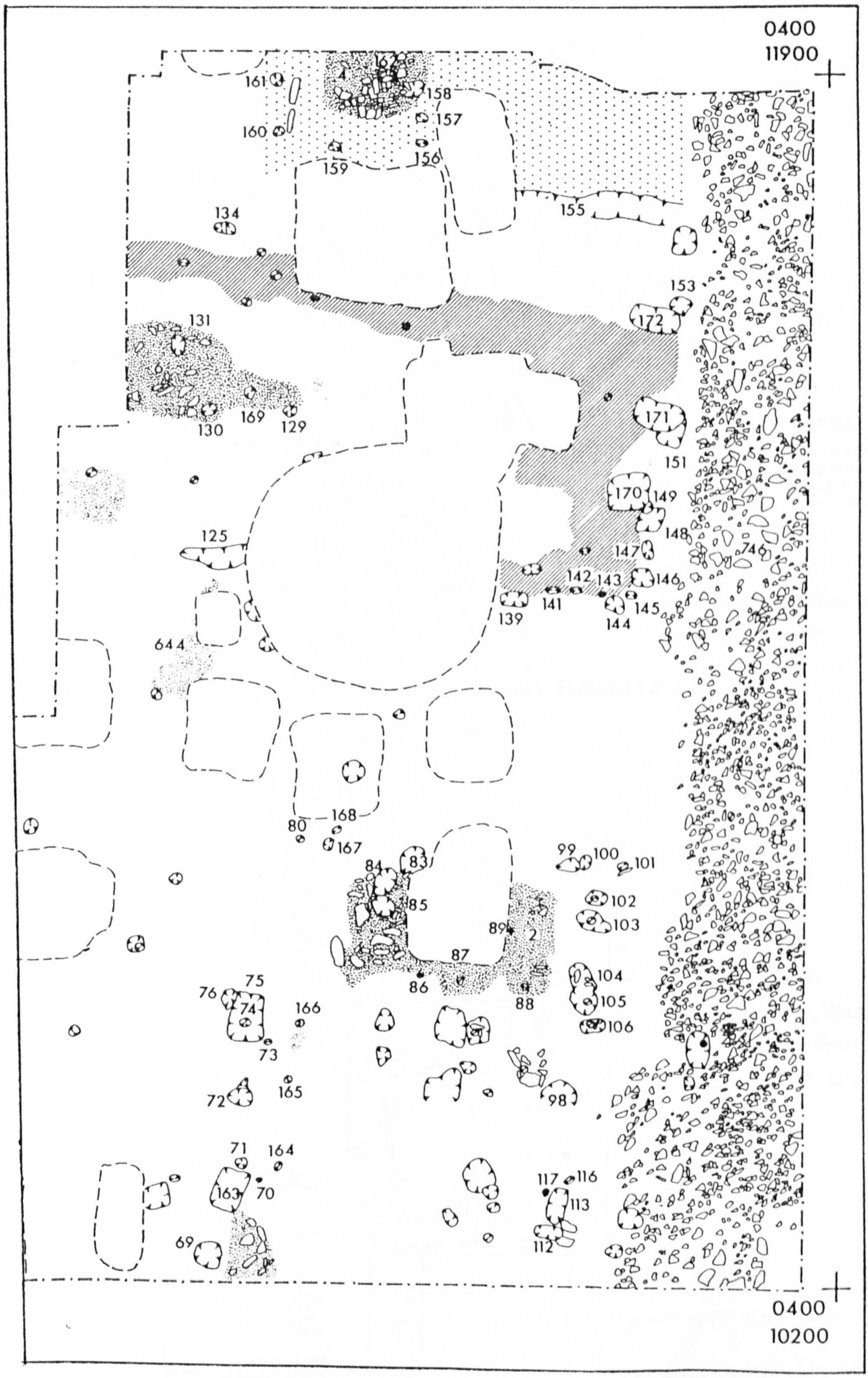

72 – Site plan of Flaxengate (Perring 1981, fig. 16)

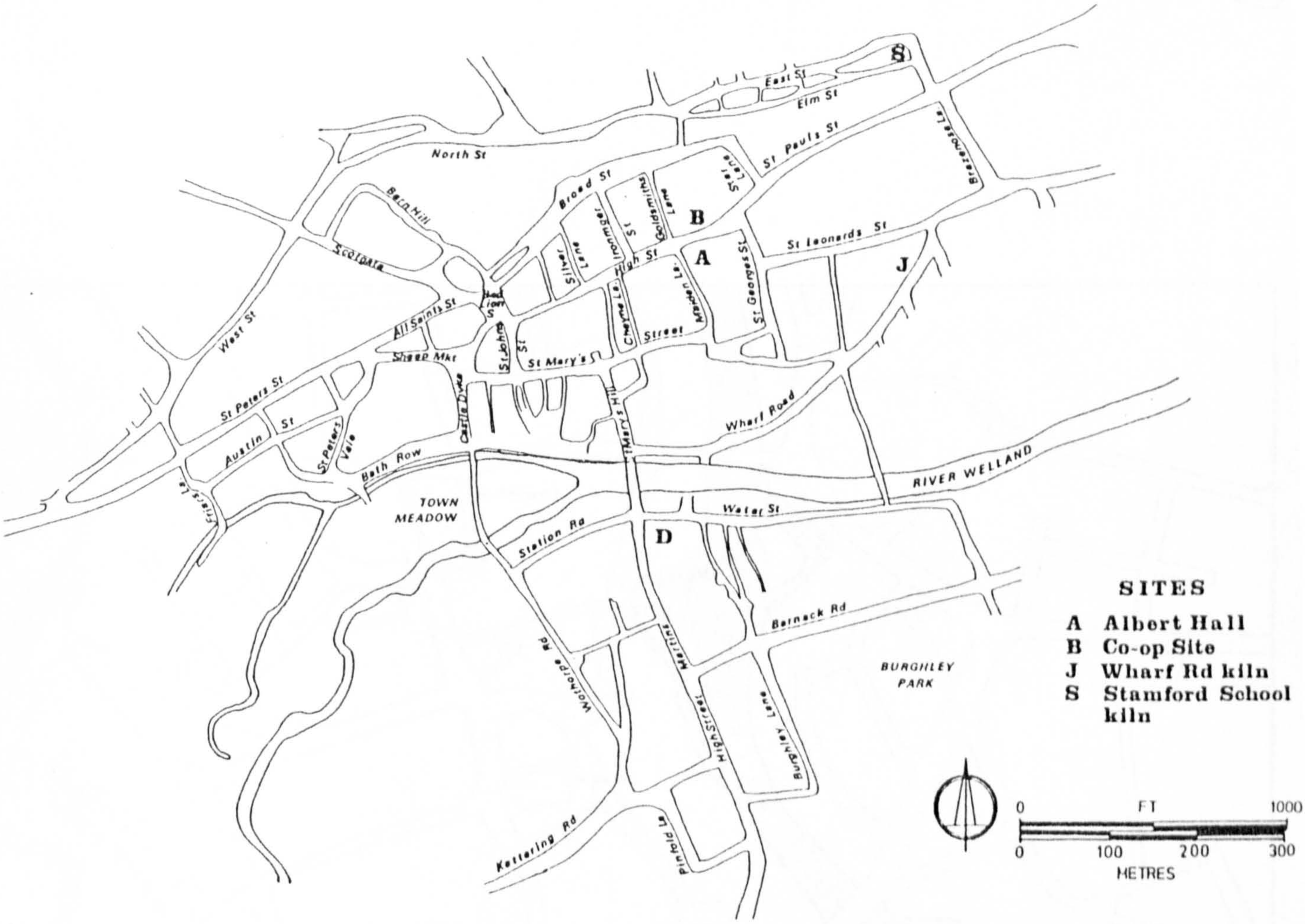

73 – Map of Stamford, with site locations (Mahaney, Burchard & Simpson 1982, 14)

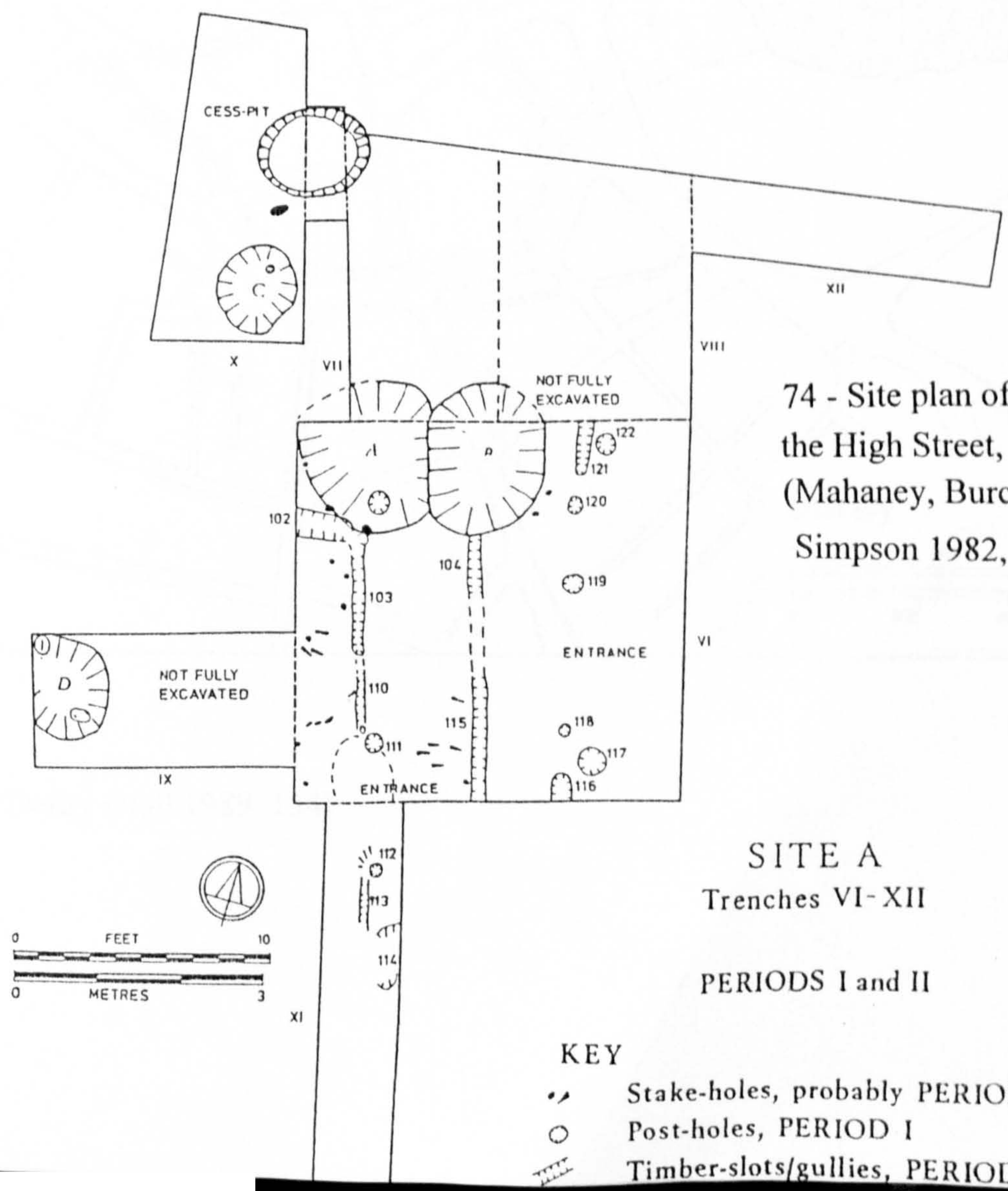

74 - Site plan of the High Street, Stamford (Mahaney, Burchard & Simpson 1982, 26)

SITE A
Trenches VI-XII

PERIODS I and II

KEY
Stake-holes, probably PERIOD I
Post-holes, PERIOD I
Timber-slots/gullies, PERIOD I

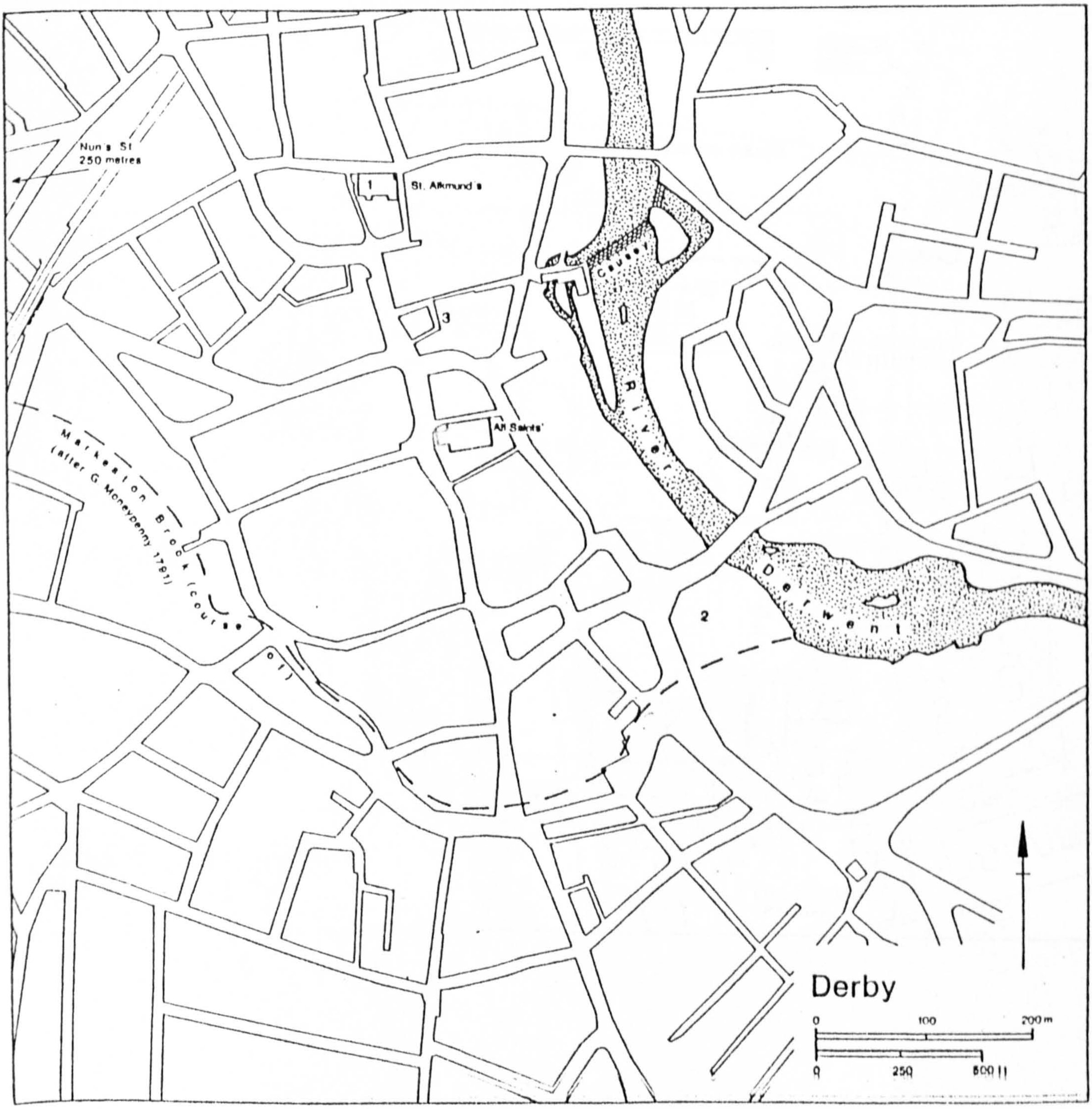

75 – Map of Derby (Hall 1989, 154)

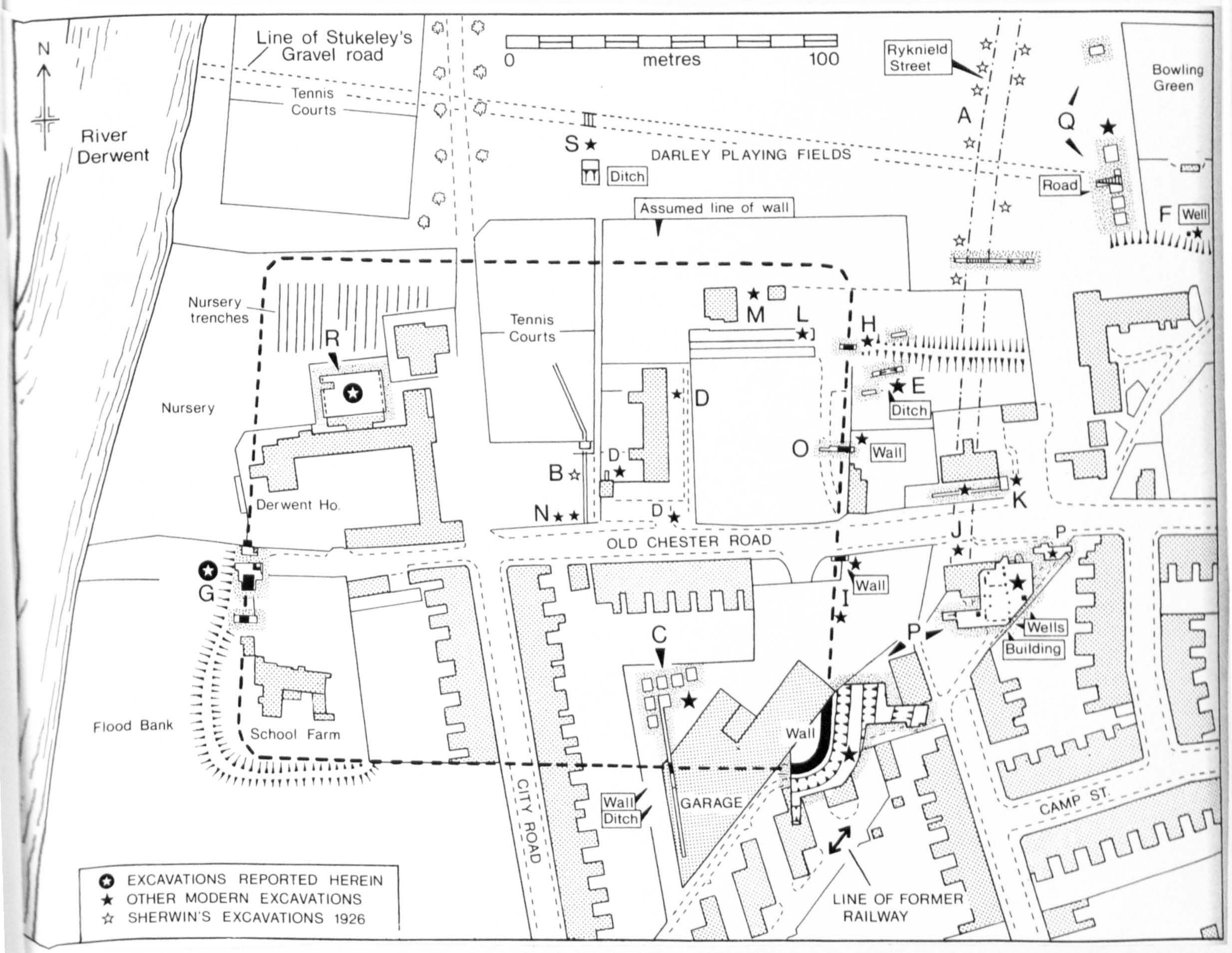

76 – Map of Little Chester (Birss + Wheeler 1986, 10)

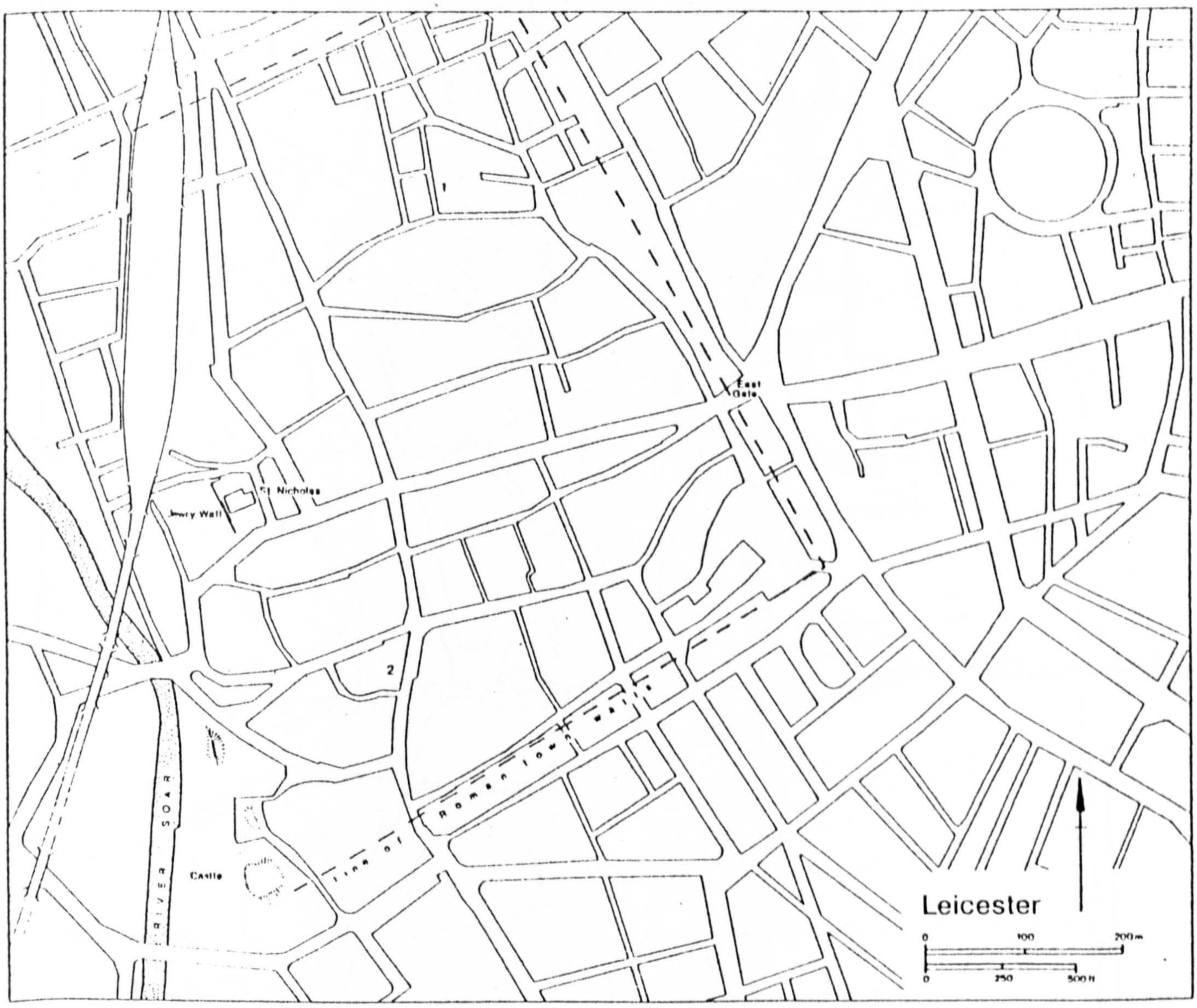

77 – Map of Leicester (Hall 1989, 164)

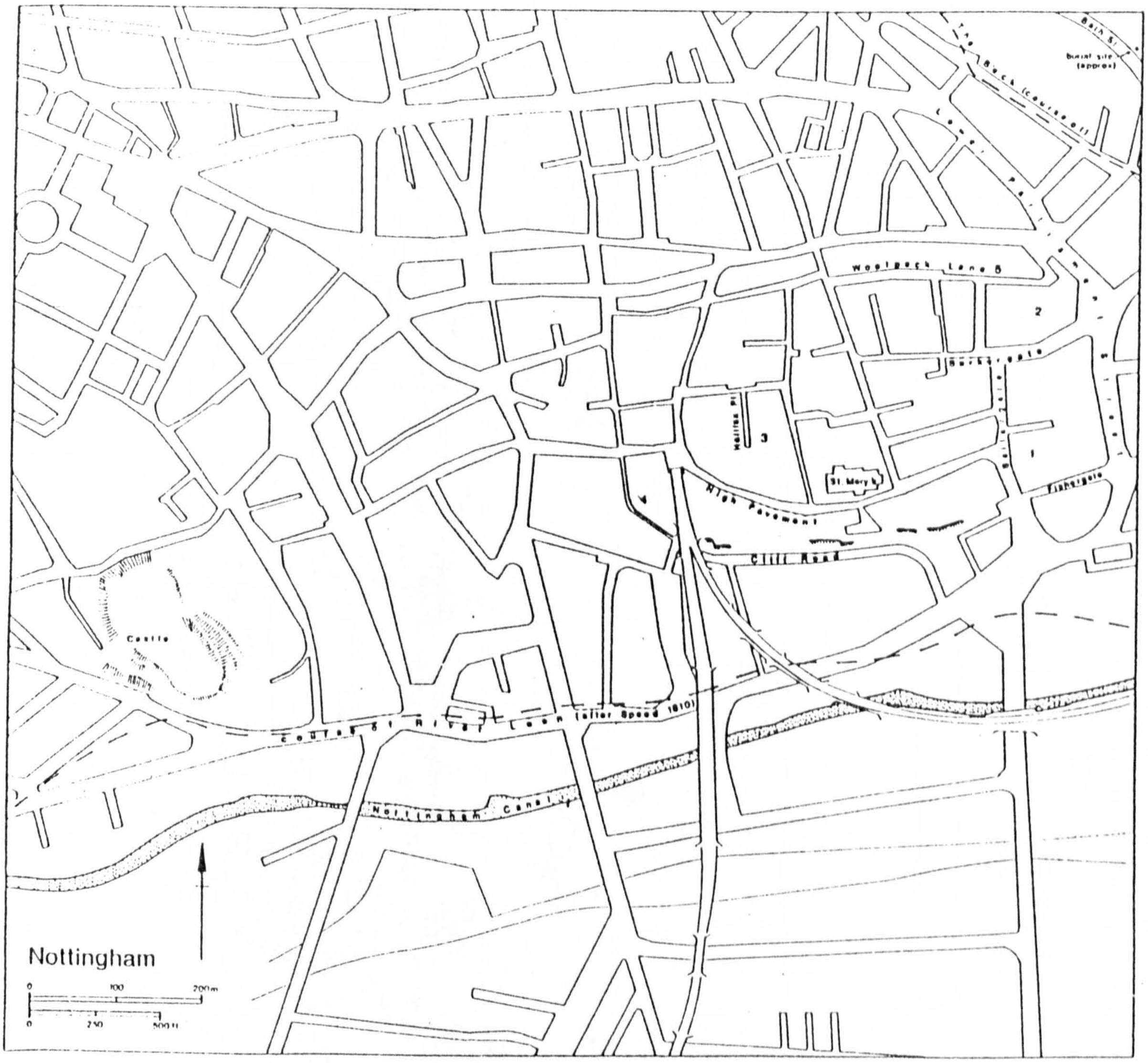

78 – Map of Nottingham (Hall 1989, 188)

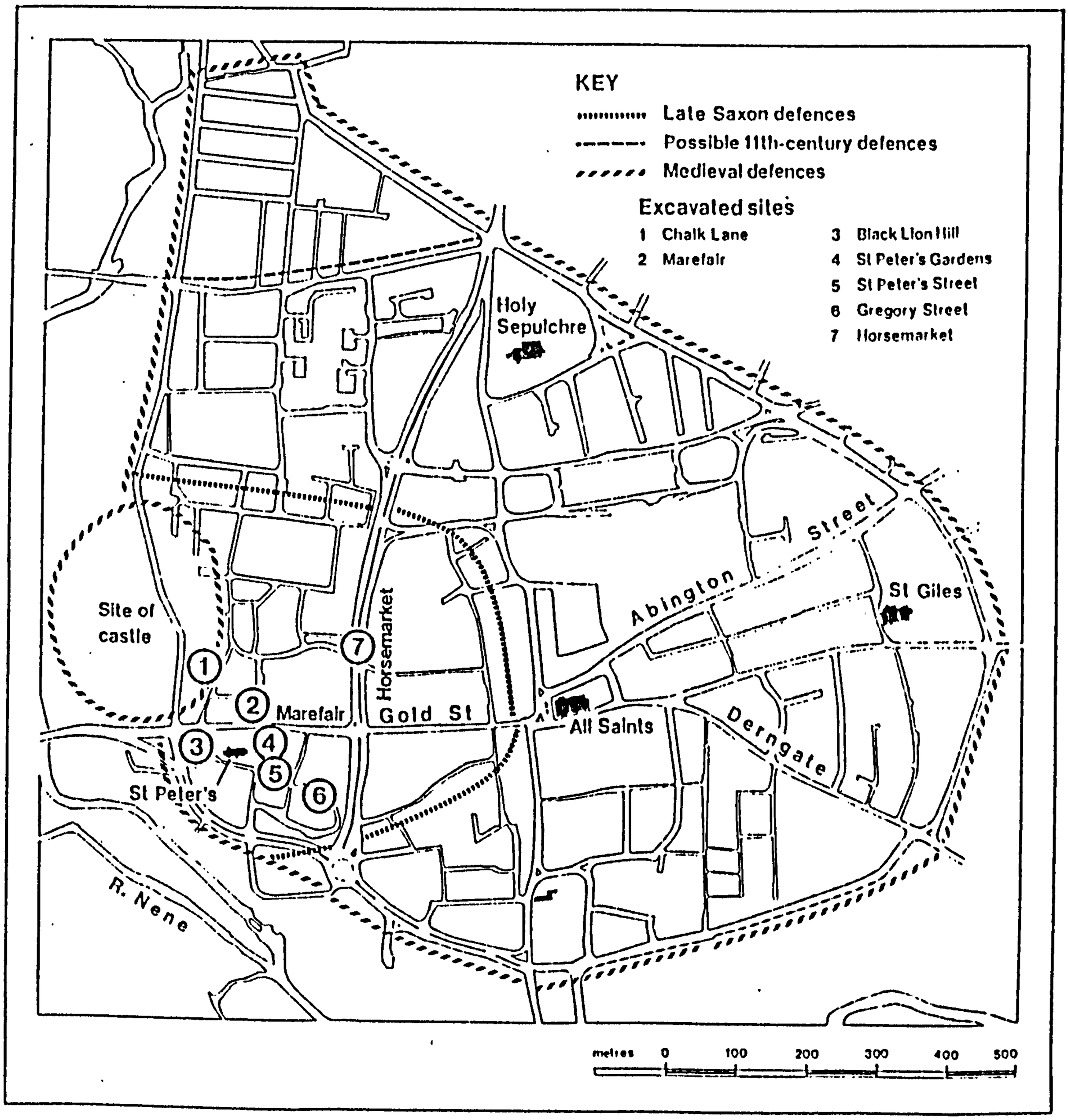

79 – Map of Northampton (Williams 1984, 116)

The Middle Saxon period

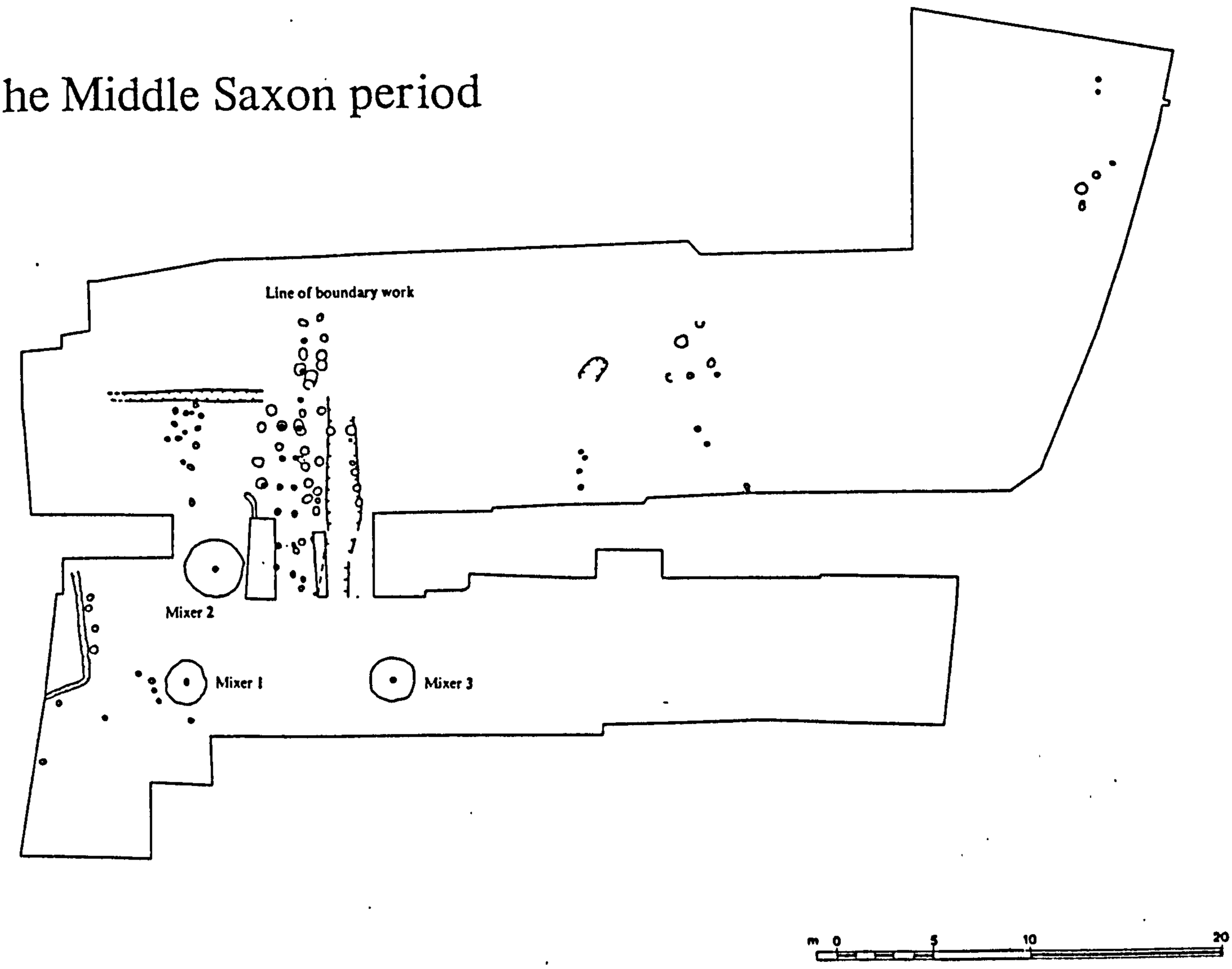

The Late Saxon period

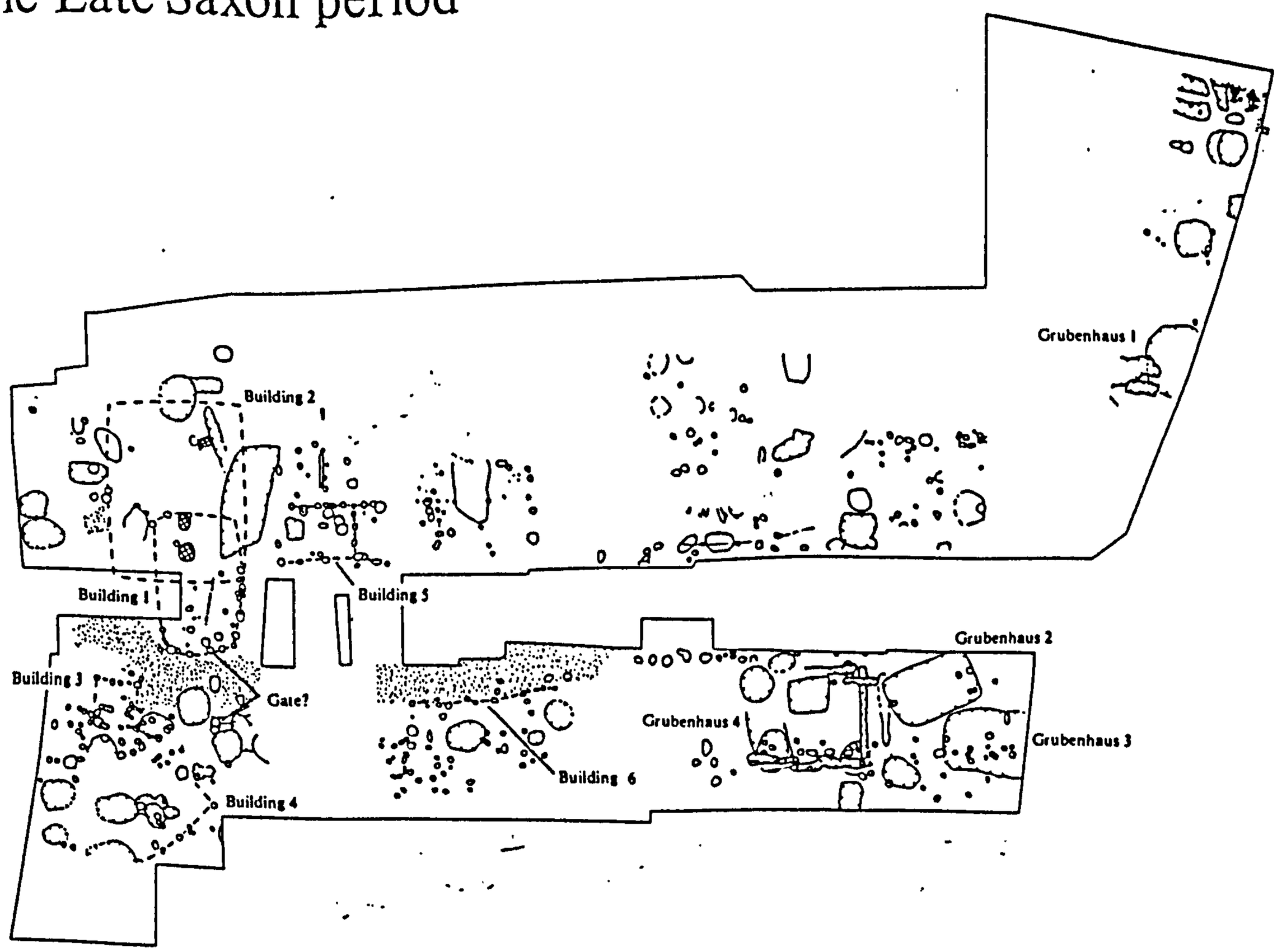

80 – Buildings at St Peter's Church (Williams 1979, 138, 142)

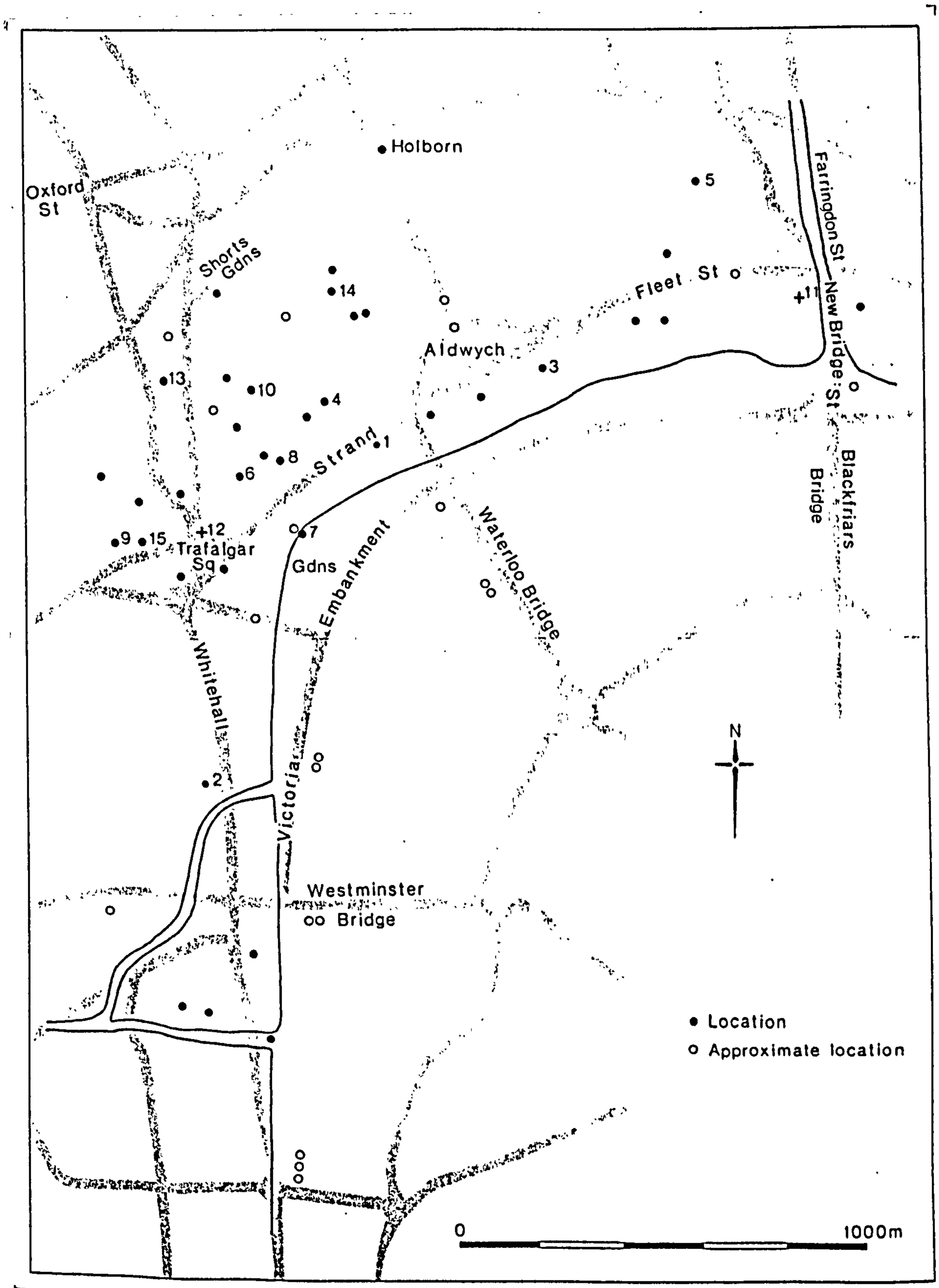

1 Savoy
2 The Treasury
3 Arundel House
4 Jubilee Hall
5 Fetter Lane
6 Bedfordbury
7 York Buildings
8 Maiden Lane
9 National Gallery extension
10 Floral Street
11 St Bride's
12 St Martin-in-the-Fields
13 Great Newport Street
14 Drury Lane
15 National Gallery basement

81 – Map of London with excavated sites (Cowie 1988, 38)

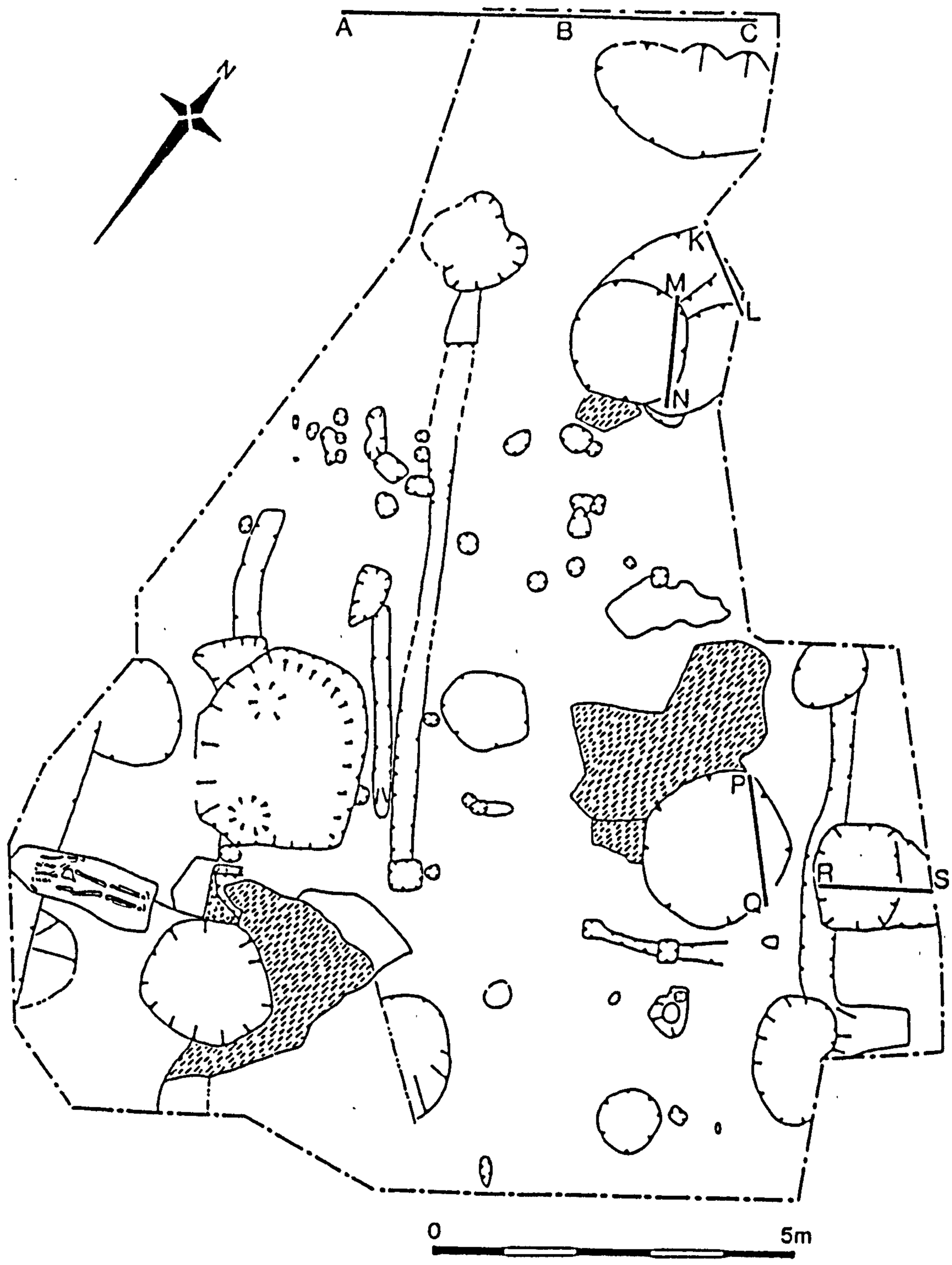

82 – Site plans of Jubilee Hall excavations (Cowie & Whitehead 1988, 52)

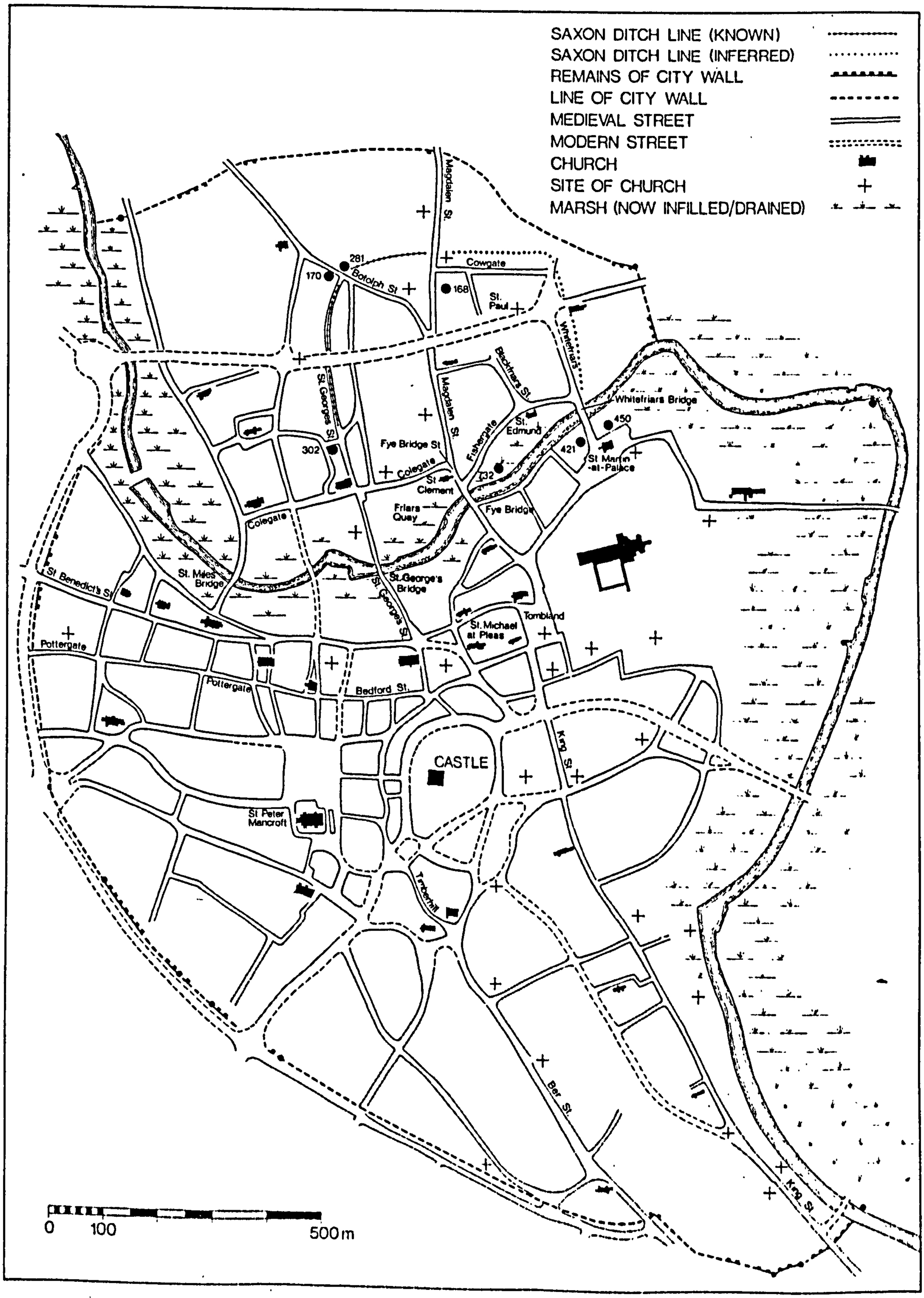

83 – Map of Norwich (Ayers 1994, x)

APPENDIX A:

ARCHAEOLOGICAL THEORY IN RELATION TO QUESTIONS OF SETTLEMENT DEVELOPMENT

During the last thirty years, archaeological theory has been characterised by intense struggles to articulate and understand its own paradigms. The inevitably personal and intuitive elements of the interpretation of the unrepeatable experiments of excavation have led to crises of faith in the validity of archaeological comprehension as a goal, and desperate attempts to quantify and control the process of site and synthetic interpretation as mediated by experience and preconception.

A largely inarticulate culture historical paradigm was typical of the practice of archaeology prior to the 1960s. At its most powerfully intellectual, it yielded the massive synthetic works of V. Gordon Childe (Childe 1925, 1951), establishing the idea of tracing the temporal trajectory of an archaeological culture as represented by recurring patterns of physical characteristics of certain types of remains. This idea had been proposed a decade earlier by the German archaeologist Kossinna (1911) who had imbued the concept with explicitly racist values, which were thankfully abandoned by Childe. The concept of culture history built upon the evolutionary understanding of the nineteenth century, and was, with its concern with the rise and fall of individual cultures, in many ways a reaction against the unbounded optimism of the latter part of that century, when both popular and scientific perceptions saw humanity as progressing ever onwards and upwards, becoming inevitably more complex and advanced in both understanding and the manipulation of the material environment. Culture history was also deeply concerned with specific peoples, directly associating the archaeological culture with ethnic and linguistic identity, and as such, although relevant to the developments of national histories, it associated all innovation to external impulses of migration and diffusion. As a result, it failed to address processes and mechanisms of change within societies, and was particularly vulnerable to racist exploitation.

Slightly later than, but temporally overlapping with this culture historical movement, was a concern with functionalism in archaeology which has continued in many areas to the present day. Strongly influenced by Marxist economic and political theory, this articulated a materialist interest in the interaction of society and its environment which had been implicit in some earlier work. It tended to be synchronic, however, and again did not address the issue of change, leaving an intellectual gap which was to be filled by a neo-evolutionist paradigm of processual archaeology in the 1960s.

This 'New Archaeology' developed out of an anthropological background, and was particularly associated with the American schools of archaeology. It made an attempt to define general rules of historical and cultural process, grounded in an evolutionary and functional understanding of cultural similarities. Its most outstanding proponent was Lewis Binford (e.g. 1962 & 1965), whose combative style presented the paradigm as revolutionary, drawing comparisons with the most extreme, artefactually based schools of culture history and functionalism, cutting off processual theory from its deep roots in the intellectual history of the discipline. One of the most basic arguments of the 'New Archaeology' was that societies were naturally homeostatic systems in which change was a response to imbalance caused by external stimulus. The response was seen as internal to the culture, and the paradigm emphasised the continual reinvention of a limited number of technological advances in response to a limited number of stimuli. The contemporary development of the 'New Geography' in Britain influenced, among others, David Clarke (1968) and Colin Renfrew (1973, 1979), who presented the archaeological aspects of general systems theory, and defined circumstances where positive feedback had arisen in archaeological systems, providing an explanatory mechanism for the homeostasis and change of Binford's ideas. This theoretical model asserted, however, that social, ideological and religious beliefs were as functional and clearly demonstrated in the archaeological record as was economic behaviour, and this simple association between the social and material, and concern with quantifiable explanation, came to be seen as simplistic and unproductively generalising.

The response to criticisms of the 'New Archaeology' was a group of diverse approaches with a common self-reflexive concern with the symbolic, contextual and

relative nature of society. Ian Hodder's work on the role of symbols (1982a & b), Michael Shanks' and Chris Tilley's on social theory in relation to archaeology (1987), and Henrietta Moore's study on gender (1986) all represent different approaches to a solution of the same problems, providing a theoretical basis for archaeology which embraced a self critical, dynamic, committed view of the discipline. In a move away from the aims of the processual, 'New' archaeology, quantifiable explanation was no longer a goal, rather value commitment was seen as important (Hodder 1995, 86). The profoundly relativist approach of the post-processualists led to extremes of interpretation, where the self-reflexive point of view of the archaeologist could potentially blind them to patterns within material evidence. The archaeological record, and particularly the person behind the archaeological record (as opposed to the archaeologist) could be seen as entirely the product of the archaeologist's perceptions, a relativity which distanced the site report and synthesis from the data source.

More recently, attempts have been made to move from the general, processual and post-processual approaches to archaeological understanding to a more integrated perception of the individual's conscious manipulative role in their society, through the medium of Gidden's social theory of structuration (Giddens, 1984). The archaeological expression of this aims to avoid the separation of social structures from the individuals who form them and exist within them, and to see instead that the material record is the result of the personal perception of what is appropriate within a local and specific social context.

John Barrett, in a recent case study based on Gidden's theory, argues that human motivation is implicit in the archaeological record (Barrett 1994, 70-71) and its accessibility is limited only by the observer/interpreter's perceptions. The profound importance of time in the human perception of place, action and appropriateness is also emphasised, yielded the concept of the 'fields of discourse' in which a person's life and role are expressed, and which result in regionality of social practice (ibid. 72-77). Methodologically, Barrett maintains, with many of his predecessors, that the patterning we perceive in the archaeological record is heavily theory-laden (ibid. 156), but avoids the relativism of much of post-processualism by emphasising the reciprocal relationship between observer and observed, and the lack of malleability of data.

APPLYING ARCHAEOLOGICAL THEORY TO ARCHITECTURAL MATERIAL

Archaeology and architecture inevitably overlap in their concern with historical or ancient buildings, and the context of such constructions, providing a fertile ground for debate and mutual criticism. The active concern of architecture with conscious design as well as sub-conscious appropriateness, can be combined with the socio-cultural preoccupations and long temporal perspective of archaeological theory to yield an holistic and contextual understanding of the role of buildings and settlements.

Initially, an attempt needs to be made to define potential approaches to the understanding of the nature of settlements (particularly urban settlements) and buildings. Two extremes of interpretation exist, parallel to the formalist vs. substantivist debate in economics: firstly, many historians, and some archaeologists, would transpose our modern legal definition and understanding of urbanism back in time, on the grounds that urbanism is essentially an historical phenomenon, and therefore 'prehistoric urbanism' is a contradiction in terms. The second school would argue that legal urbanism is a phenomenon of the modern age, and attempt to reach an understanding of settlement history and archaeology through an identification of the roles of contemporary centres of settlement in relation to each other.

The major weakness of the first approach, which has been characteristically an historical approach, is its rigidity. Pirenne's adherence to this point of view led him to underestimate particularly the importance of the northern trading centres in his comprehensive examination of the development of early mediaeval Europe (Pirenne 1992, 186-284), as the documentation led him to see urban centres only within Carolingia. This is a highly abstract paradigm, which makes no attempt to change our perceptions, and must distance the scholar from the patterns in the material and documentary evidence which do not conform to the patterns of the late mediaeval and modern cultures upon which the model is constructed. Its limitations have become increasingly clear as archaeological evidence and social theory have revealed the

complex physical expression of even apparently simple social and physical differences, such as population size and density, access to resources, and climate, between modern and earlier societies. The great attraction of this theory, however, is its recognisability. In avoiding the problems of dealing with socio-political differences of culture, it produces models which can be compared relatively easily with modern society, and provides a basis for a simplistic evolutionary approach to the advent of urbanism in societies. Settlements can be seen as 'proto-urban', ambiguously poised on the edge of somehow becoming modern. In recent years, some Scandinavian mediaeval archaeologists have continued to maintain and develop aspects of this model, among them Axel Christophersen (1989), whose work is further discussed below.

The opposing view, which is often linked to a substantivist approach to the economic questions relating to urbanism, is typified by the work of Richard Hodges (1982), and in later years, Helen Clarke and Björn Ambrosiani. Within this general, theoretical paradigm, different approaches are, of course, common. The more straightforward of these is used by Clarke and Ambrosiani in their summary of Viking Age urbanism (1991), where they adopted a definition of a town initially proposed by the historian Susan Reynolds, characterising a town as:

> ...a permanent human settlement ... in which a significant proportion of its population lives off trade, industry, administration and other non-agricultural occupations ... It forms a social unit more or less distinct from the surrounding countryside. (Clarke and Ambrosiani 1991, 3)

This very general definition is sufficiently flexible to fail to exclude any settlement in which the authors might be interested; its relativism allows the natural patterns in the archaeological material to be studied without abstract limitation. A serious terminological problem develops out of this, however, in that many of the archaeological settlements which are thereafter studied under the definition 'town', such as Skien, in Norway (ibid.67) and Helgö, in Sweden (ibid. 69) are not settlements which we would intuitively recognise as such, and which do not fit with our acquired understanding of the word. Even though the definition is made explicit, the incompatibility of the defined term and the commonly understood term can lead to misunderstanding.

Other approaches attempt to use archaeological and social theory to understand the perceptions of archaeological societies. For the historic and proto-historic periods of any region, these theoretical attempts can, of course, be augmented by documentary study. The documents give an immediate and intimate insight into the perceptions of people which cannot be afforded by any other source. Their weaknesses and biases, however, are well understood. Even filtered through our own perceptions, and as often as not, through unfamiliar, dead or archaic languages, and through the vagaries of physical survival, it is clear they were nearly always created by the dominant group of any given society, reflecting their attitudes, values, and desires, rather than a broad picture of the society as a whole.

Archaeological theory, in contrast, makes direct attempts to grapple with the interpretation of material remains of the whole of a society. The empirical 'new' archaeology of the 1960s, in its quest after a systemic understanding of the 'rules' of human social development, led to the development of generalised hierarchies, or patterns in which the process of urbanism and the phenomenon of urban settlements had set places. Urbanisation was seen as an inevitable stage in the progressively more complex social evolution of a group. This is an understanding which had its earliest roots in the evolutionary ideas of socio-economists of the nineteenth century, and was developed through the substantivist schools of economics particularly as represented by Polanyi (1969), moving into anthropological and archaeological theory via the work of authors such as Marshall Sahlins (1974).

The inevitable rigidity and generalisation which resulted from the 'new' archaeological paradigm was somewhat mitigated in Richard Hodges essay' on *Dark Age Economics* (1982) by applications of the more sophisticated aspects of systems theory (*ibid.* 151-161) to the processes of economic change and urbanisation in ninth century. Nonetheless, the analysis remains more descriptive than explanatory, and in generalising for the whole of North-Western Europe, fails to address the real differences between the post-Roman, and non-Roman worlds. It also assumes that superficial similarities in contemporary material remains represent real similarities in

social organisation and values, without taking into account differences in local histories.

Post-processual archaeological theory has also been used as tool with which to analyse architecture. Its more relativist, self-critical and symbolic approaches allowed deeper understanding of the process of the creation of architecture, and its potential for specific, local, social expression. Thus Linda Donley (1982), following the example of Ian Hodder's analysis of the role of symbols (1982a), examined the sophisticated use of symbols in the domestic architecture of the Swahili clans of the Kenyan coast in order to analyse the complex social ordering of public/private and gender relations in that society. Decorative details were greater in number and complexity towards the back of the house, in the most private of rooms where the husband and wife slept, where the Qur'an was kept, where the women prayed, and where bodies were laid out - a room of contradictions, where the most sacred and valuable objects were kept, but also where potentially polluting activities such as sex, and the laying out of corpses, took place. Symbols could be seen as a means for controlling and resolving the inherent conflicts in the presence of so many activities which were perceived as private for different reasons.

Another productive post-processual approach to the analysis of architecture was the linguistic analogy - the idea of a grammar of design, an artefactual grammar, in which various proportions and organisational models were sub-consciously appropriate and comfortable, under various specific historical circumstances, for specific local reasons. This is the model used in Henry Glassie's classic analysis of vernacular housing in a region of Virginia, in the United States (Glassie, 1975). The analysis is heavily data-driven, in an attempt to address the problem of theory-based analyses which lack data, and takes the risk of deferring interpretation until the data forms 'efficient, simple concepts that are natural to the corpus' (ibid. 14). The author stated his aim explicitly: 'the development of an account of artifactual competence, then is the minimum synchronic statement from which all analysis must proceed' (ibid. 17).

Both these approaches are particularly relevant to the study of architecture, with their emphasis on the means by which people create an enclosing, symbolic environment in

which they feel comfortable. The self-critical archaeologist or architectural historian was also a profound advance, as the realisation that 'objectivity' was inevitably coloured by the observer's own values and interests allowed the freedom to make those values and interests explicit. This latter theme, however, was to be carried to increasingly extreme lengths, and inevitably resulted in the undervaluing of the interactive relationship between data and observer, and overvaluing of political paradigm which characterised some later post-processual work, particularly that of Michael Shanks and Chris Tilley (1987), and Tom Saunders (1990). Other general criticisms must also include the neglect of the temporal and physical aspects of the context of the artefact, in favour of the examination of the immediate cultural context, and the emphasis on the human as a contradictorily passive creator, as when Glassie (1975, 20) states that the grammatical rules which generate building form are unconscious. The diversity of post-processual paradigms is such, however, that universal criticisms are not always either possible or productive; this theoretical explosion led to many flexible and apposite new approaches to the interpretation of architecture, though, interestingly, no new analysis of the process of urbanisation itself.

More recently, archaeological applications of structuration theory have opened the possibility of a contextual interpretation of the phenomenon of urbanism at all its levels, as process, artefact and design, which includes the possibility of the active manipulation of the material record by the people at its centre. In avoiding the empiricism and generalisation of the 'new' archaeology, it allows for the possibility of the culturally specific development of settlement patterns which may appear superficially similar. The conscious humanity of the paradigm also provides for the possibility that sets of symbols and activities can be used at different levels to emphasise similarities and differences within and between groups, and to communicate messages, but in an active manner which is compatible with the architectural concepts of design and planning, as well as in the passive manner emphasised by the work of Glassie (1975), Hodder (1982a) and Donley (1982). People understand how their culture works, and conciously exploit its media.

Elements of all these different theoretical paradigms form productive approaches to the analysis of architecture and urbanism, addressing different issues in what is a hugely complex question. Empiricism emphasises the ecological and systemic elements which form a part of the framework in which any society has its being, while the post-processualist's value-laden examination of the subconscious aspects and expressions of issues in the material record which are important to our own world view is a continual reminder that archaeology must be relevant, for both practical and intellectual reasons. Structuration theory, however, with its emphasis on the active manipulated and manipulative nature of physical space and material culture, is particularly relevant to the built environment.

THE BUILDING AS A CONCEPT

One important aspect of the built environment which need to be examined and understood in order to come to terms with the process of urbanisation, and which is rarely conceptualised, is the building. The definition and nature of a building are not normally thought problematic by archaeologists, but even a cursory examination of some examples reveals the concept of 'a building' to be ambiguous, and its physical boundaries often difficult to define. The Iron Age *broch*, or complex, monumental Atlantic round house, particularly in its Northern Isles incarnation, is a particularly good example of this ambiguity. A central, circular, dry stone tower is often found to be integrated with extensive areas of cellular, 'subsidiary' housing, which is structurally integral and contemporary with the tower. The physical continuity of the extended structure makes it amenable to analysis as one building (e.g. Foster 1989), but its function may have been similar to a settlement, in that it may have sheltered numerous families, related or unrelated by blood, and may have either been planned, or aggregated over time (ibid. 49). Similarly, at different periods in history, it may be possible to define the English mediaeval castle either as a single building, or several buildings in a closely integrated settlement, as the various households within it show greater or lesser degrees of social and physical integration (as demonstrated in Faulkner's analysis in 1964). Hillier and Hanson comment that: 'Buildings are distinguishable from settlements by their tendency to embody a much higher degree of

social information in their spatial form' (Hillier & Hanson 1984, 142); unfortunately, this fails to specify their physical distinguishing characteristics.

Implicit, however, in much architectural and archaeological work is the suggestion that one building is covered by a continuous roof (although this information is rarely explicit in the archaeological record). This leaves many ambiguities relating to relatively modern constructions, among them terraced housing, tenements, tower blocks, shopping centres and industrial complexes; the ambiguities are revealing in themselves, however, and open the possibility of structures whose social function and expression allows them to be analysed both as settlements (or groups of buildings) and as individual buildings. Any attempt to avoid these difficulties by defining the parameters of a building by its function and social role, rather than its physical nature, leads into ever deeper complications, as inevitably function is both multiple and variable over time. The physical definition of 'under a continuous roof', with all its potential ambiguities, remains the least gratuitously complex, despite its inherent incompatibility with the relatively two-dimensional archaeological record.

That a built structure, and particularly a building which functions as a domestic shelter, is a direct, though not necessarily simple, expression of its social environment, is generally conceded (Rapoport 1969, 54-5; Johnson 1990, 245-255; Hillier & Hanson 1984). This expression will inevitably include elements of the society's aesthetic, its familial and work organisation, its socio-political relations, history (both local and general) and the personal choice of the builder. The variety of different effects that these have on the physical and social nature of any building over the varying duration of its existence is the very reason that buildings have posed both an intractable and a stimulating problem to the analyst, whether archaeologist or architect. Any theoretical or methodological tool which provides a new insight into aspects of the social archaeology of buildings must be considered, and used.

APPENDIX B:

SITE METHODOLOGY AT BIRKA

The excavation and post-excavation methods used on site have been discussed and criticised in greater detail in the Method Report (Birka Studies 5, Bäck and MacLeod, forthcoming) and the interim report on the 1990 trial trench (Ambrosiani 1995) further discusses methodological questions and problems arising from that year's excavations. The reader is advised to refer to those volumes for a critical expansion of this appendix.

In brief, however, during 1990 excavation followed the phases and structures, where they could be distinguished. From 1991 to 1995, excavation followed the stratigraphy of the site, and was documented using a modified single context planning system, based on the use of a total station for simple planning, with additional plans for structural elements and other more complex contexts, and on context recording using standardised description sheets.

The post-excavation analysis consisted of grouping the contexts in a hierarchy of interpretive levels, thus reconstructing the site in reverse order of deposition. The terminology used on site and, from this point onwards, in this report, is not identical to that used in the English speaking world, and for the reader's convenience, a glossary and translations follow:

TERMINOLOGY FOR EXCAVATION AND POST-EXCAVATION 1991-1995

R-enhet, registreringsenhet

R-Unit, Recording Unit

English equivalents: none

A subdivision of a stratigraphic unit (see below) for the purpose of detailed location of finds. The unit may have any surface area up to 1 m2, any depth up to 0.2 m. Where the unit exceeds this size, more than one R-unit must be issued. An S-unit may contain any number of R-units from one upwards. The R-number is taken from a sequence of 4 figure numbers prefixed by R, i.e.. R1001, R1002 &c.

R-enhet + R-enhet = S-enhet

S-enhet, stratigrafisk enhet

S-Unit, Stratigraphic Unit

English equivalents: 'context', 'layer', 'cut'

Defined as any deposit which is consistent in appearance, content and texture, and has distinguishable borders, or any interface containing more than one such deposit. In so far as it is possible to define such, an S-unit should be the result of a single action, or continuous process, with discontinuities leading to a change in S-unit. See Appendix D.

S-enhet + S-enhet = grupp

Grupp

Group

English equivalents: 'subgroup', 'context series'

Any number of s-units which have close stratigraphic links and are functionally alike at a lowinterpretive level. Thus, for example, two or three repairs on a floor might form one group, while the floor itself would be in a seperate group. See Appendices D and E.

grupp + grupp = anläggningsenhet

Anläggningsenhet

Deposit series, A-unit

English equivalent: 'group'

A number of groups which are associated with each other at a slightly higher interpretive level, often forming a structural element or a series of linked activities. Following the example named above, afloor together with all its repairs, or the post-holes, stake-holes and preserved wood which make up a wall, might be a deposit series. See Appendix C.

anläggningsenhet + anläggningsenhet = bebyggelse sekvens

Bebyggelse sekvens

Structural sequence, B-sequence

English equivalent: 'phase', 'period'

A combination of deposit series which form a coherent sequence of associated activities with a defineable start and finish marked by substantial structural change in the archaeological record. All the deposit series which go to make up one building and its use, and eventual destruction, could thus be considered to be one structural sequence, defined by the removal of a previous structure, and the destruction layers of the structure itself. See Chapter III.4.3.3.

The agreed definition of an S-unit includes the phrase 'and any interface containing more than one such deposit'. Despite this, no cuts were recorded, and in practice, S-units consisted exclusively of deposits. This must be borne in mind when examining

the post-excavation analysis in detail, as most post holes, ditches and other cuts were recorded at their point of destruction, i.e. filling, rather than their point of construction i.e. cutting. Construction levels for buildings are therefore based upon floors, where clay floors are present (finds can fall through wooden floors, which do not effectively seal the underlying s-units), hearths, deliberate levelling of underlying structures, and stone packings for major posts (where seperable from post-pipe fills).

Stratigraphic ambiguities surrounded the positions of driven posts and stakes. Certain limits on their uppermost possible placements in the sequence could be defined by deposits which entirely and visibly covered the s-units, for example light coloured ash layers, but below these levels, stakes and driven posts were grouped on the basis of their geographical position in relation to other structural elements. Thus, stakes with slightly different stratigraphic levels, which nonetheless formed a coherent line, relating to a shift in the nature of the surrounding layers, would be grouped together.

APPENDIX C

A-UNIT DESCRIPTIONS FROM BIRKA 1990-1995

A1. 34 clayey silt fills, with rubbish, in northern lane
98 clayey domestic rubbish layers, in northern lane
101 sill stones along northern plot boundary set in clay

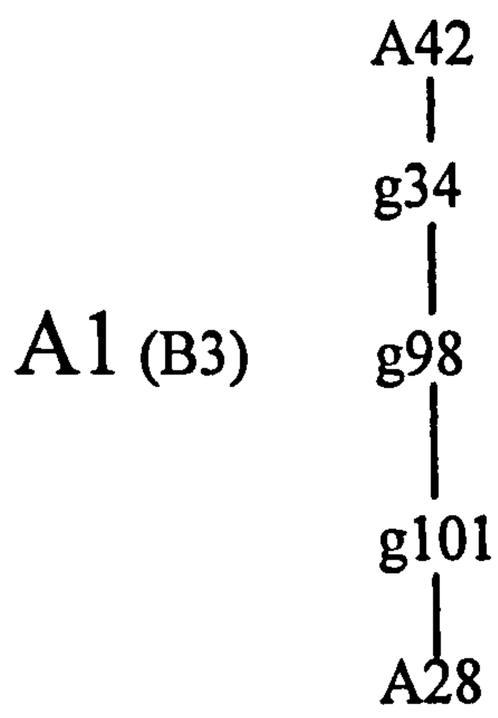

This A-unit consists of a series of primarily domestic rubbish layers, associated with a line of sill stones oriented north-west to south-east, on the northern boundary of the northern plot. These deposits are all badly damaged by Stolpe's excavations in this area, and isolated to greater or lesser degree from contemporary deposits. The stones are probably the foundation for a fence line marking the boundary, but the stratigraphic isolation of the whole deposit series makes it very difficult to interpret. The nature of the deposits, which contain large amounts of bone and organic material and are little laminated, suggests that even those contexts which lay within the bounds of the plot were probably not formed within a building.

A wasp bead (F66892, R 4941, s2095 see below, finds lists) suggests a relatively early date for this deposit series. The production date for these beads, in Ribe, where they can be dated by associated dendrochronological material, is c. AD 760-780 (Stig Jensen, pers. comm.). However, given that there is only one in this deposit, it may well be residual. Substantial amounts of casting debris, including crucible fragments and vitrified fired clay as well as mould fragments, indicate that much of the rubbish derives from the excavated plot, where copper alloy smithing took place.

It is likely that this deposit series is contemporary with A66, and forms a yard or open area to the east of the gable end of that building, but the stratigraphic relationship between the two has been destroyed by one of Stolpe's trenches, and the phasing of this deposit series is based on the phasing of underlying contexts.

AREA: E

PERIOD: B3

A2. 115 hearth
117 use of g115 - charcoal and ash clearances
118 stone packing set in redeposited clay
120 redeposited grey brown sand floor
131 stake holes
133 stakes
135 post hole
282 line of stake holes oriented NW - SE, making up the southern wall line with g372
307 laminated working surfaces and occupation deposits
310 hearth
311 floor of redeposited clay, and sand for casting
319 redeposited grey white ash
372 5 stake holes forming southern wall line
373 several stake holes forming the eastern wall line and hearth screen
374 casting bowl or warming hearth
378 2 stones (post pad)
517 eight stakes in a line oriented NE - SW, western wall line

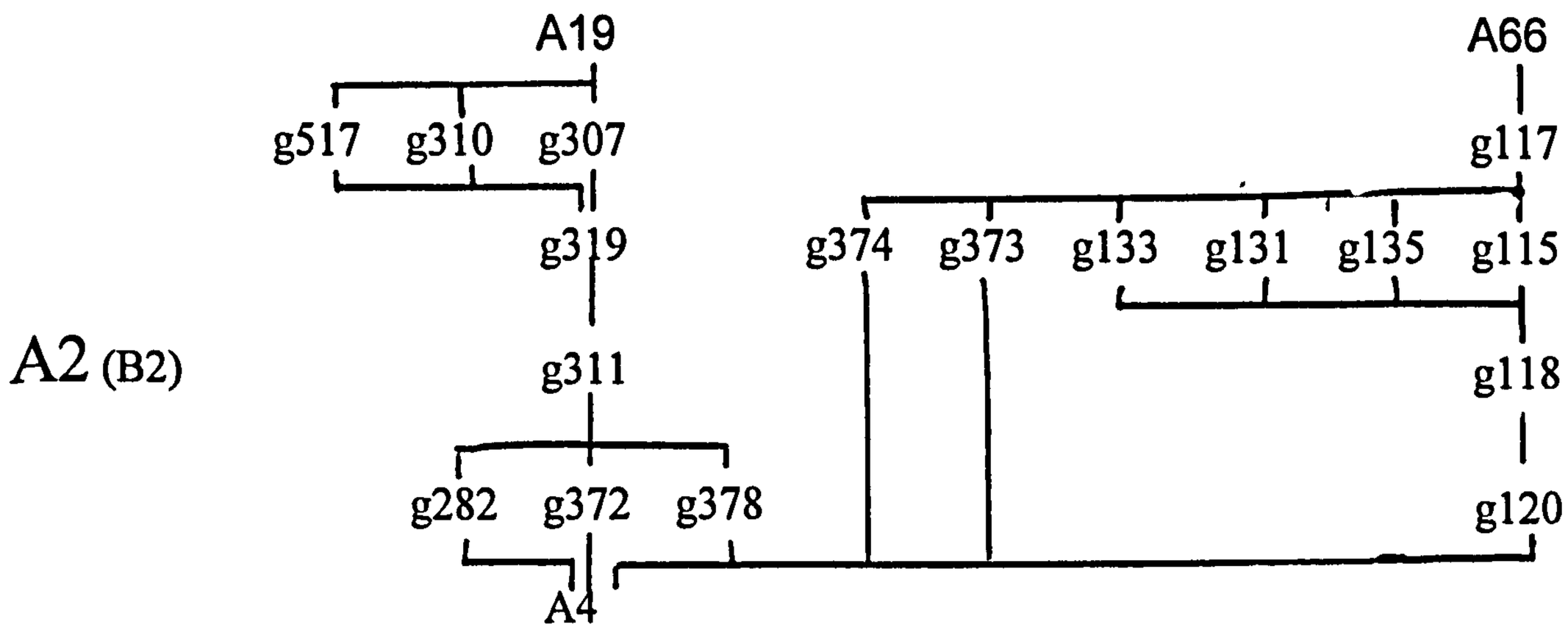

This building post-dates the quay and first jetty; there is an overlap between the destruction of the quay fence (A64) and the rubbish layers associated with the use of the building i.e. A). It does, however, respect the existence of the quay, and is not built over it.

A2 is more like a shed than a real building - 5 x 6 m in size, with a central hearth (g310), and slight construction with posts on pad stones and wattle walls. The finds

suggest that the building was used for copper alloy casting, as does the little warming hearth (g374) which lies to the south of the main hearth. The western side of A2 appears to have no extant clay floor, and may have been covered entirely with casting sand, the remains of which survive in g311. The hearth, which is of unusual type (see group description g310), raised rather than sunken, and continuous with the clay floor, shows only limited signs of burning, as does the warming hearth, suggesting that the structure was in use only a limited time before its renovation. A small additional hearth, g115 was placed just within the northern corner of the building. This structure was more heavily burnt than was g310, and may have been the industrial hearth for the building. At this point, the wall also had a stone foundation (g118), which suggests that it may have been exposed to higher temperatures.

Groups 307 and 319 are the use of this structure. Their limited extent and depth, combined with the lack of burning on the hearth suggests that the building was used for a short period only before its renovation.

This building stretched between the northern and eastern areas, although only c. 0.5m lay in the northern area. It forms one of the few clear stratigraphic connections between the two areas, lying as it does beneath the lowest level of Stolpe's trenches. Under the circumstances, it was therefore unfortunate that so little absolutely dateable finds material could be associated with A2.

The reconstruction and renovation of this building is A19.

AREA: N & E

PERIOD: B2

A3. 27 industrial rubbish in the northern lane
90 sill stones in clay
91 domestic rubbish in the northern lane
92 redeposited clay fill in the eastern corner

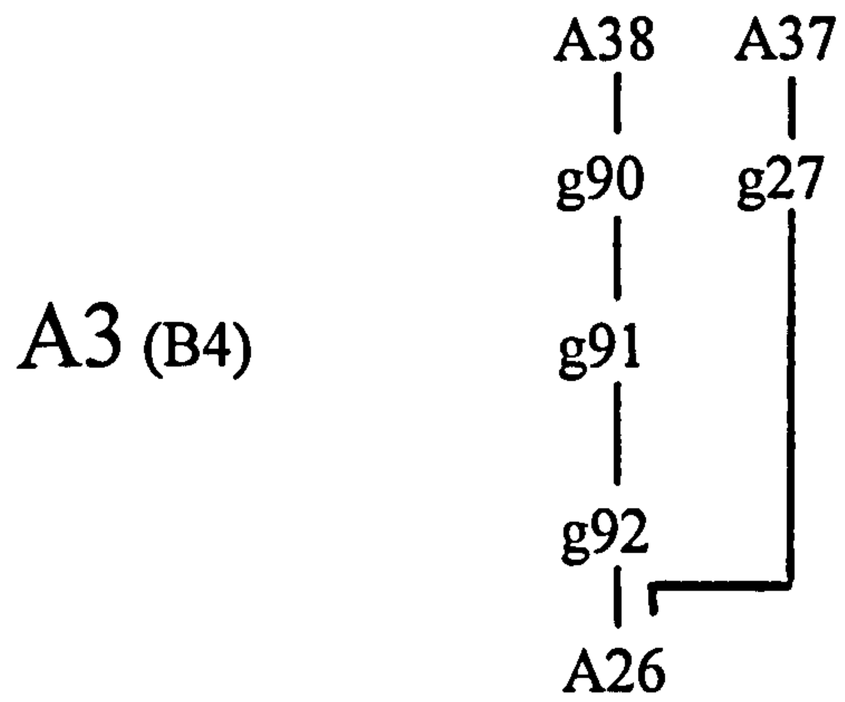

These groups consist of a series of rubbish layers deposited over a redeposited grey-green clay fill, in the northern of the two lanes. It is at this point that the northern lane joins the putative eastern lane, and subsidence over earlier boundary ditches (A6) appears to have been a problem, judging by the repeated deposition of substantial clay layers.

A3 post-dates A26, and pre-dates the northern building A37. It was defined separately from A26, which has a similar stratigraphic position and function, because A26 contained evidence for a resurfacing of the northern lane, which A3 post-dated.

The finds from the deposits demonstrate that the rubbish derives primarily from the metalworking carried out on the northern plot. The majority of identifiable moulds from this a-unit are Petersen's types P37 and P27A, associated with numbers of crucibles, vitrified clay, and a possible tuyere (R4477, F50723).

A functional interpretation of this area is limited by the degree of disturbance resulting from Stolpe's excavations. That these deposits lay outwith the plot and in an area of frequent traffic is, however, extremely probable. The finds were in general very fragmented, and the excavated surfaces were heavily compacted.

AREA: E
PERIOD: B4

A4. 289 domestic rubbish layers on the southern part of the plot
312 domestic rubbish layers in the south of the plot
314 rubbish layers in northern part of plot
316 rubbish layers on the plot
322 rubbish deposits on the plot
472 rubbish deposits on the plot

A4 (B2)

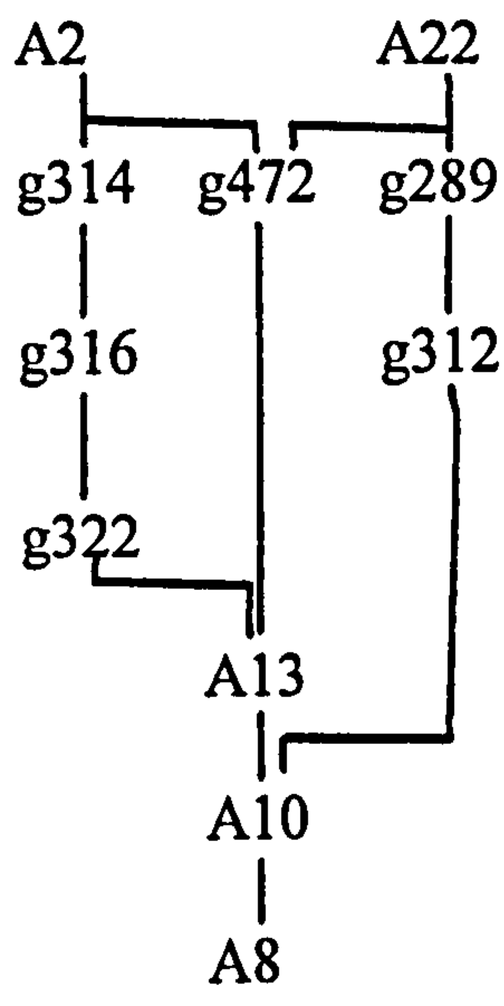

These rubbish layers form the surface upon which the first building on the plot (A2) was constructed. They pre-date the northern fence line A10, which cuts them away along their north-eastern edge. They also pre-date, therefore, the earliest surviving rubbish deposits in the north-eastern part of the northern lane (A18) which derive from the use of building A2.

This a-unit was phased to B2 because it post-dated the plot boundary marked by fences respecting the line of the first jetty (A9) and accumulated either at the end of the lifetime of the first jetty and quay foundation (A64) or, more probably, at the very beginning of the lifetime of the second jetty (A21).

Much of this rubbish was deposited under water, though the further east (i.e. upslope) the layers lie, the less the finds show signs of water erosion. g472 is cut away along its eastern edge by g309 (A19) and g517 (A2).

AREA: N & E

PERIOD: B2

A5. 337 clean, water deposited sand

A5 (B1)

A6
|
g337

This group is the earliest deposit which was excavated. It consists of water deposited sands, with lenses of vegetation, accumulated on the early shoreline. There continued to be finds from these layers, particularly animal bone. Many of the finds were heavily water eroded, and had clearly been exposed to long periods of movement in the sand layers, as would be expected under water.

AREA: E

PERIOD: B1

A6. 46 stake holes
58 three very large, stone-filled post holes
63 post hole on the eastern edge of the site
138 ditch on the southern plot boundary, with post holes
300 large, stone filled post hole
334 construction layer in g338
335 fills in ditch on northern plot boundary
336 ditch on northern plot boundary
338 shallow rectangular cut on northern plot boundary

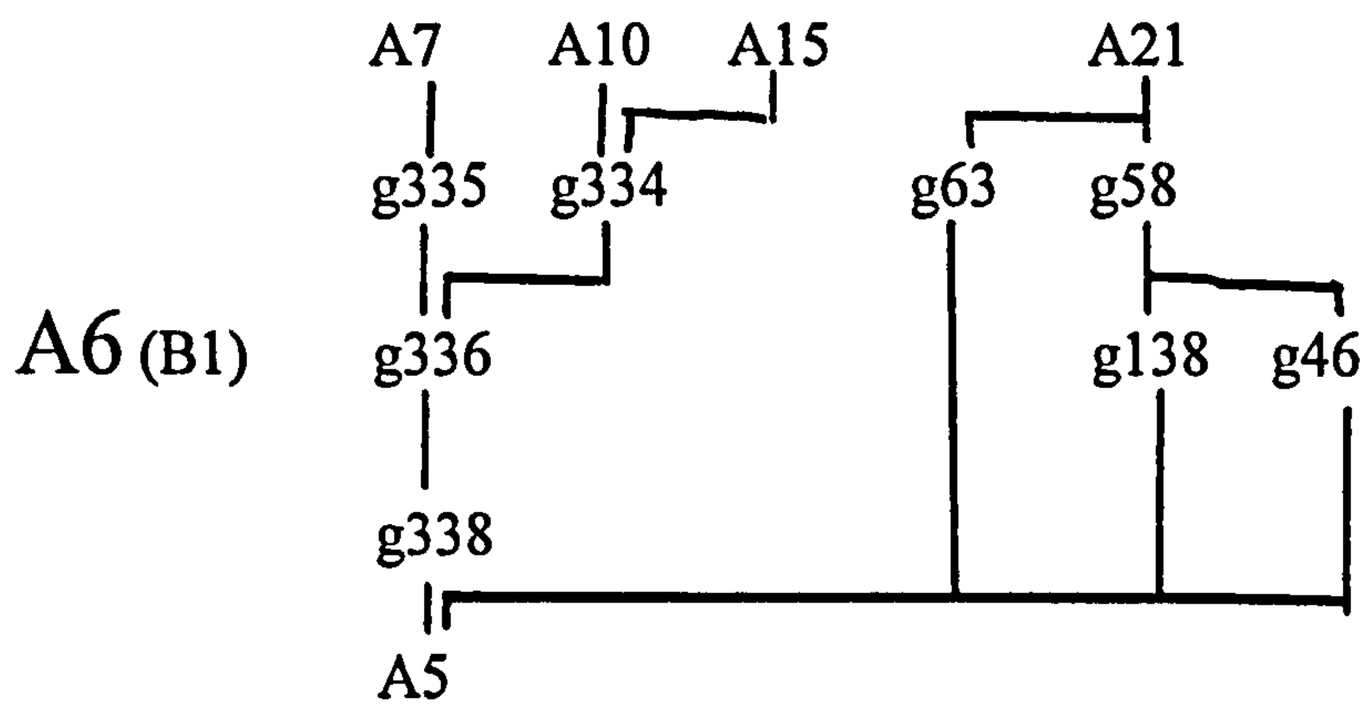

These structures probably relate to an earlier plot east of ours. g138 and g336 are boundary ditches which extend into the excavated plot from under the eastern edge of the site, on the northern and southern plot boundaries. The southern of the two ditches is stratigraphically earlier than the second jetty, and contains three large post holes, ca 0.3m diameter, for driven posts. The line of the ditch was continued eastwards by three stake holes and the start of another ditch.

At the end of the southern ditch, and clearly a part of the same structure, was a stone-packed post hole for a huge driven post of oak, 0.5m diameter with a tapered end (s1218, g58), which had been driven deep into the natural subsoil. The structure of this hole was identical to that of two other post holes (g58), which did not have preserved wood in them. One contained the remains of a rotted post, while it seems probable that the post in the third hole had been dragged up. These three, despite their stratigraphic isolation from each other, were grouped together on grounds of their form, placing, and relationship to the surrounding deposits. Groups 300 and 63 were also large post holes along the edge of the plot, whose stratigraphic relationship was insufficiently close for them to be included in g58, but which also clearly formed part of the boundary line in phase B1.
AREA: E
PERIOD: B1

A7. 45 three stake holes on the eastern plot boundary.
341 diffuse line of five stake holes on the eastern plot boundary
343 diffuse line of four stake holes on the eastern plot boundary
354 stake holes on the eastern plot boundary

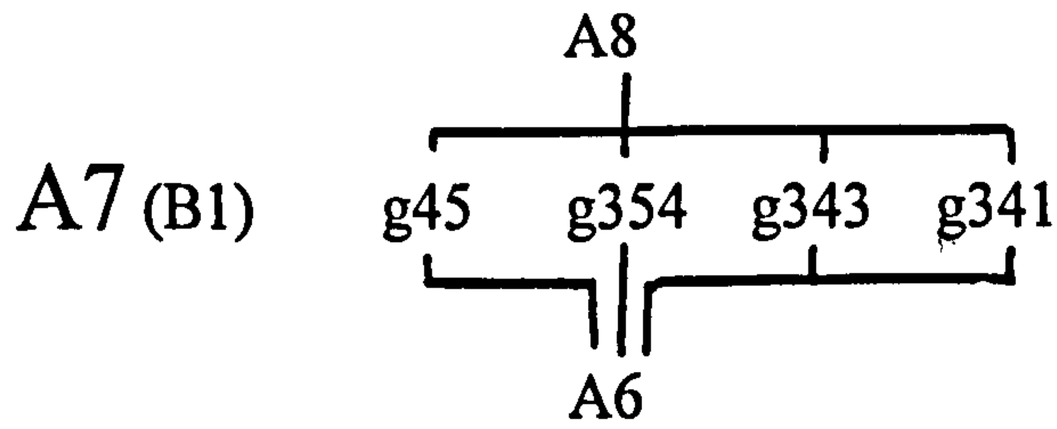

These stake holes form early fence lines along the eastern plot boundary. Their stratigraphic positions in relation to each other are far from clear, as they were cut into, and covered by, flood-deposited sands. Their geographical position makes it clear that a succession of at least three fence lines is involved, presumably moving downslope (westwards) as progressive land rise made the shoreline drier and more useable.

The movement of these fence lines into the excavated area suggests that the shoreline plot was not occupied at this early period, and this is confirmed by the very low position of this deposit series in the stratigraphic sequence. Unfortunately, this also makes it very clear that the excavated area was not among the first generation of occupied plots in the settlement, and that these lay to the east, upslope of the shore.

AREA: E

PERIOD: B1

A8. 47 domestic rubbish in the eastern edge of the site
332 water deposited gravel in northern boundary ditch
333 domestic rubbish eroded by water
344 water deposited sand, with lenses of rubbish

A8 (B1)

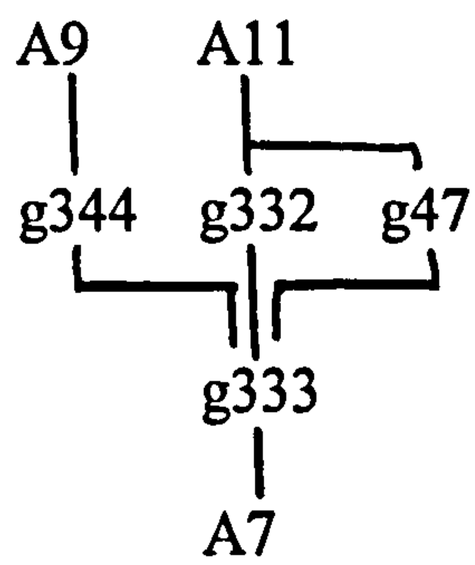

This deposit series covers most of the plot surface east of the quay foundations (A64), and is water deposited, or affected by flooding, in its entirety. It is possible that this reflects the impact of one particular year's spring flood, but more likely that it is the result of several seasons' intermittent flooding over the shoreline of the settlement.

Two wasp beads (F70248, F70172) in g333 date the deposit series to the third quarter of the eighth century.

AREA: E

PERIOD: B1

A9. 346 stake holes
355 stake holes on the northern plot boundary
356 stake holes on the southern plot boundary
357 stake holes on the northern plot boundary
359 stake holes on the southern plot boundary
360 stake holes on the southern plot boundary
365 stake holes on the northern plot boundary
379 stake holes on the northern plot boundary

A9 (B1)

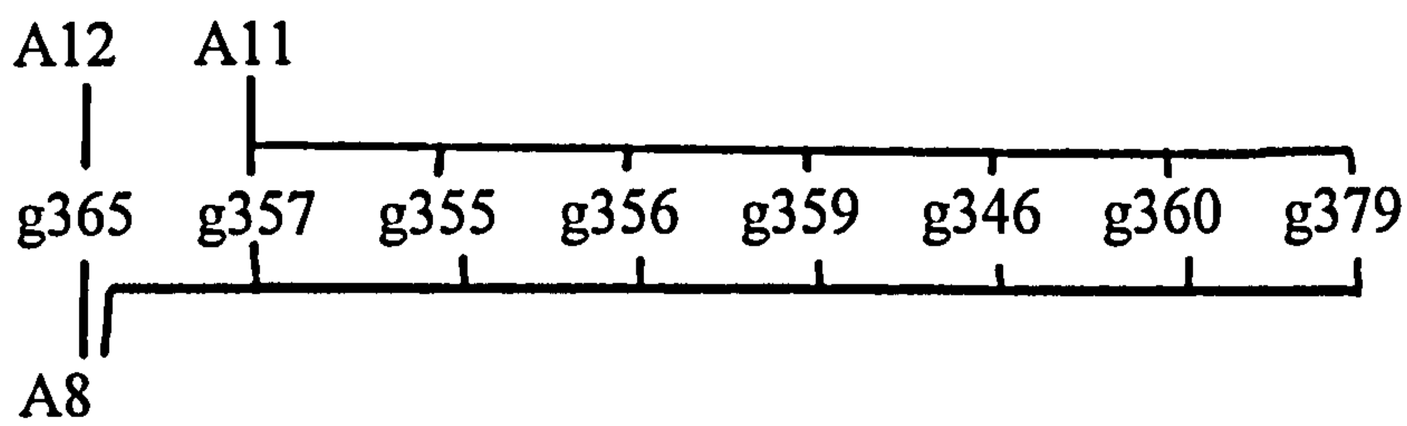

These stake holes form clear and well-constructed fence lines defining the northern and southern plot boundaries, still predating the construction of the first building on the plot and in all probability contemporary with the first jetty foundation (A64). Although they appear to have been stratigraphically later than the eastern fence lines in deposit series A7, the ambiguity of the stratigraphic sequence in A7 is sufficient that the two structures should be considered in relation to each other. There can be no doubt that they both date to prior to the construction of the first building on this plot.

The implications of the delineation of the plot at a period when it was either to wet to be occupied, or merely standing vacant, are interesting. This shoreline area was not merely absorbed into the area of the unexcavated plot east of it, nor was it settled first and then enclosed. The land was defined and bounded, but not occupied until noticeably later, suggesting control of the occupation of land within the settlement.

AREA: E

PERIOD: B1

A10. 340 stake and plank holes in a line oriented NW - SE
347 stake and plank holes in a line oriented NW - SE
350 stake and plank holes in a line oriented NW - SE
351 stake and post holes in the area of the northern lane
873 stake holes, forming 3 wattle panels, in a line oriented NW - SE
874 five plank holes in a line oriented NW - SE

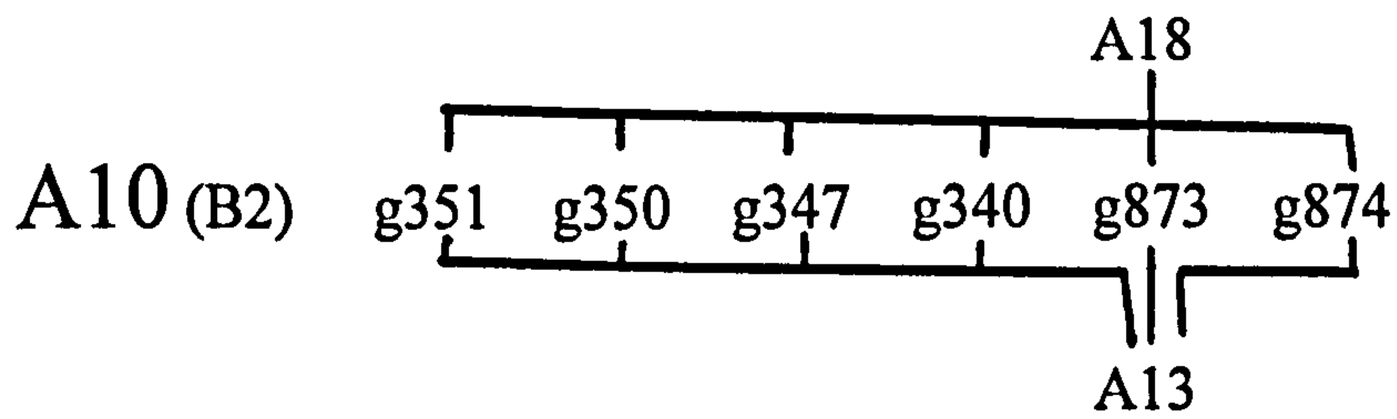

These groups form the remains of a substantial and well constructed fence of stakes and planks, oriented NW - SE along the edge of the northern lane, marking the boundary of the plot. g873 seems to be an extension of the fence, using wattle panels, but is stratigraphically contemporary with the rest of the structure. The whole is contemporary with the construction of the first surfacing in the northern lane, represented by g351, the supporting stakes and posts for a plank, or more likely split log (S - *kavelbro*) paving in the lane, and must therefore date to the period when the plot was first reliably dry, and worth building upon.

The relative dating of the fence line and paving is supported by the fact that the surfacing of the lane was associated with a shallow cut which removed the sandy flood layers from the area of the lane, down to the glacial clays, thus providing a solid foundation for the construction of the road.

The structure therefore post-dates the first jetty construction, and the quay to the west of the plot (A64), but may well be contemporary with the second jetty (A21), which apparently extended further out into the lake, and the first building on the plot (A2).

AREA: N & E

PERIOD: B2

A11. 327 limited water deposited layers
328 water deposited sand in boundary ditch
329 lenses of water deposited sand and gravel
330 rubbish layers showing signs of water erosion
331 water deposited silty clay in northern boundary ditch
348 natural spread of stones on shore line
361 spreads of stones

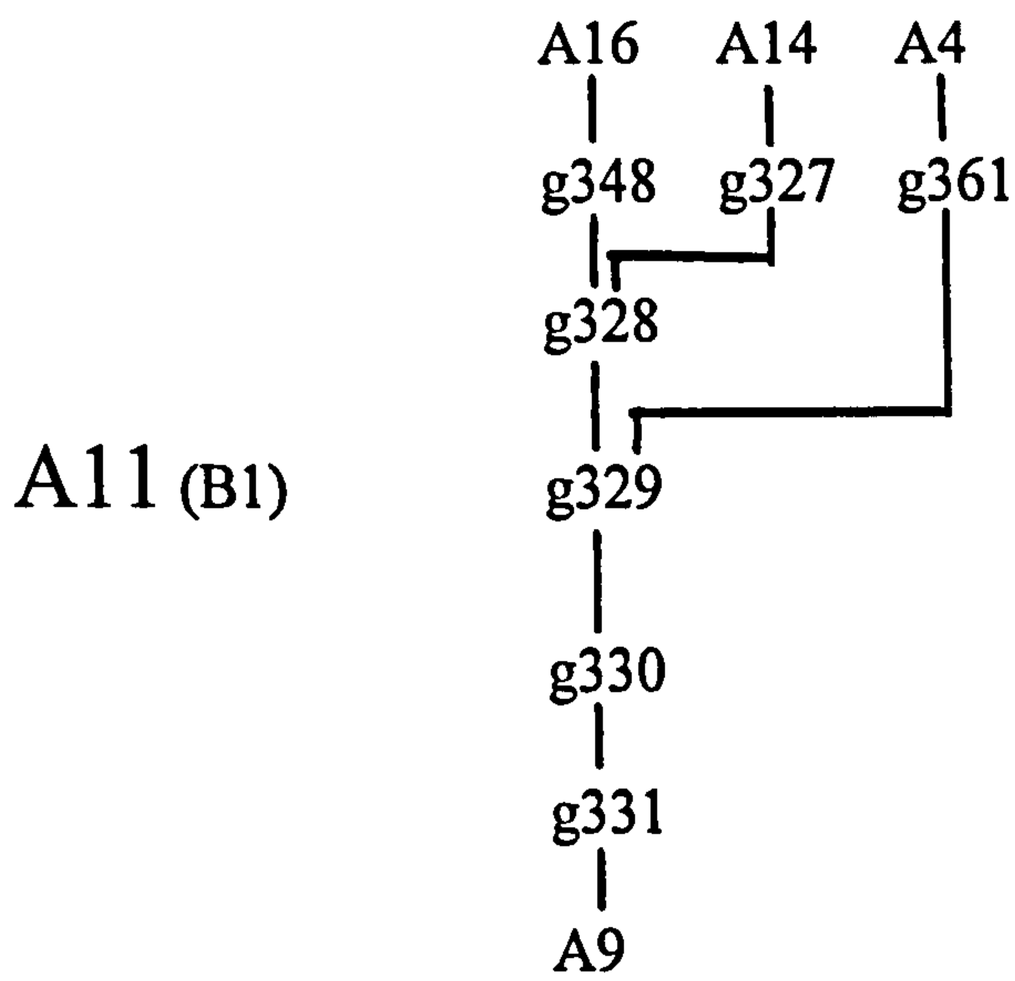

These flood layers, formed over the shore line during the period prior to its first occupation, but following the establishment of its boundaries as marked out by the fence lines in deposit series A9. The undoubtedly water-deposited nature of these layers demonstrates clearly that the plot was subject to flooding even after it had been laid out and bounded, as discussed with reference to A9. The delay in occupation, and the foresight demonstrated in the early delineation of the plot makes the planned nature of the centre of the settlement very clear.

Deposit series A11 is dated by the presence of five of the ubiquitous wasp beads (F70278, F70819, F70820, F70821, F69824) to the third quarter of the eighth century. This dating is confirmed by the presence of two dateable types of comb: in g329 (s2776) type C2 AD 750-800, and in g331 (s3043) type A2:8 AD 725-800 (Michél Carlsson, pers. comm.).

AREA: E

PHASE: B1

A12. 30 working surface laminated with industrial and domestic debris
31 redeposited sand casting floor
102 two stake holes
111 sill stones in clay
112 post hole
123 laminated working surfaces, respecting the southern wall line
130 use and occupation deposits, respecting the southern wall line
182 hearth
277 two wattle panels forming a right angled wall

A12 (B3)

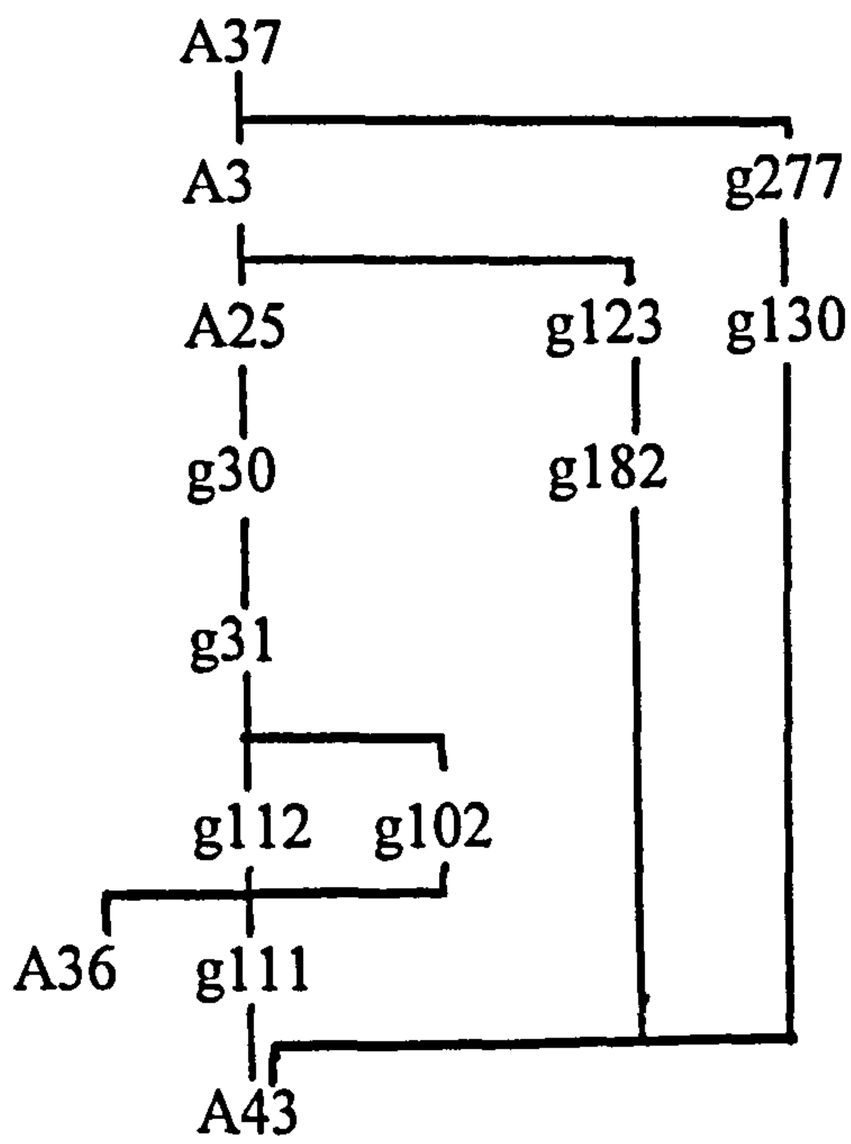

This deposit series forms the renovation of building A66. The finds from A12 indicate that this building also functioned, at least partially, as a workshop for the casting of copper alloy.

A small hearth g182, which was interpreted during excavation as deriving from the adjacent workshop building to the south, proved on further analysis to belong to this building. It is located very close to the south wall of A12, but the extent of g123 and g130 make it clear that the southern wall encloses the hearth. The southern wall line of this building survived only as a gap between the contexts deriving from the northern and southern buildings,

suggesting that it may have been of a sill-beam, or other non-intrusive construction.

The majority of structural details within this deposit series relate to ephemeral internal features (such as g277, and g102), and cannot be interpreted in more detail, given the complete lack of organic preservation. G111, on the other hand, which is a stone packing in clay, may well form the threshold for a door in the northern wall. Whether this is a replacement for an earlier door in the same place, or whether it is a new construction, is unclear.

AREA: E

PHASE: B3

A13. 313 water-deposited sand, with gravel lenses
315 gravelly, flooded domestic rubbish
352 water-deposited sand, and gravel, with iron pan
462 clayey silt fill packed with stone
463 rubbish layers over the quay foundation
464 layers of domestic rubbish over hard standing(A64)
465 layers of domestic rubbish over hard standing(A64)
509 destruction of fence line g872/871
875 loose stone packing in rubbish layer

A13 (B2)

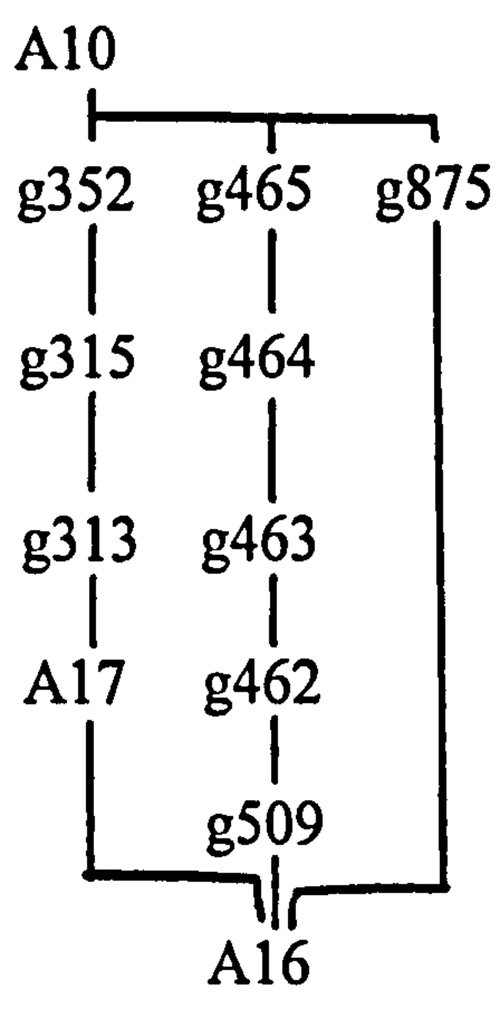

This deposit series consists of layers over the northern and eastern edges of the plot which post-date the construction of the quay or hardstanding on the western edge of the plot (A64), but are cut by fence line A10, which marks the first full time occupation of the land.

These rubbish layers vary from water deposited, over the shorewards, western edge of the quay, to dry on the more easterly areas of the plot. They pre-date the construction of building A2, but are stratigraphically contemporary with A4, i.e. the surface upon which A2 was built. The finds from A13 resemble those from A4, and are dated by the presence of 'wasp' beads (F70754, F59762 & F83405) to the third quarter of the eighth century.

A13 was disturbed in its eastern extent by Stolpe's excavations, and the upper groups (for example, g352) show the characteristic shape of the sub-rectangular pits excavated at the bottom of Stolpe's strip trenches into the lower stratigraphy.

AREA: N & E

PHASE: B2

A14. 326 remains of a bonfire/camp fire
349 stake holes on the northern plot boundary
364 2 plank holes
368 stake holes on the northern plot boundary

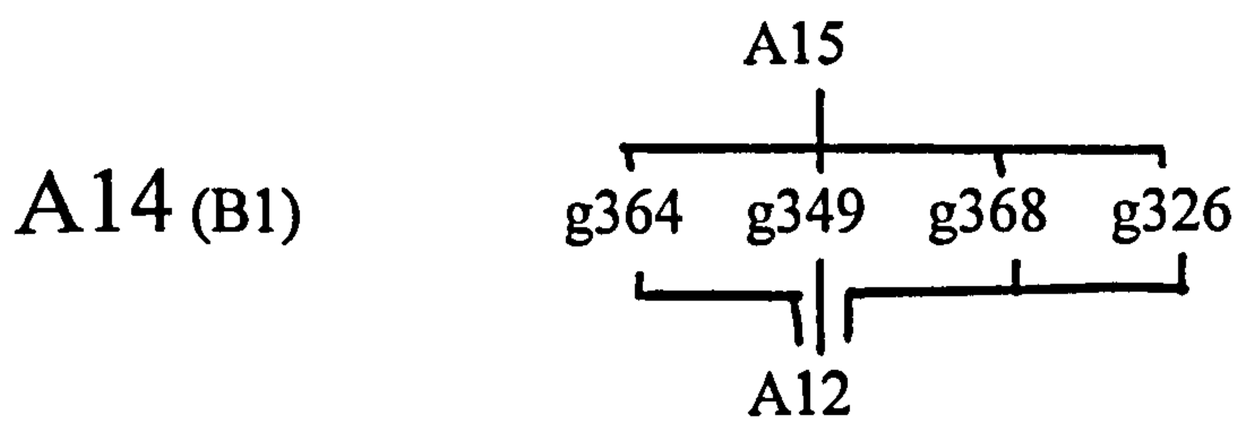

This deposit series represented a renewal of the northern plot boundary, previously marked by fence line A9, and an early use of the plot, in the form of the remains of a fire.

The position of the two plank or stave holes g364 may have marked an entrance to the plot, as the stakes in the fence line broke off at this point, leaving a gap of c. 1m, before they resumed.

A14 predated fence line A10, and building A2, and gave an indication that the plot might have been intermittently used prior to its permanent occupation in phase B2.

AREA: E

PHASE: B1

A15. 140 water deposited fills in the southern boundary ditch
325 laminated, water deposited fills in the northern boundary ditch

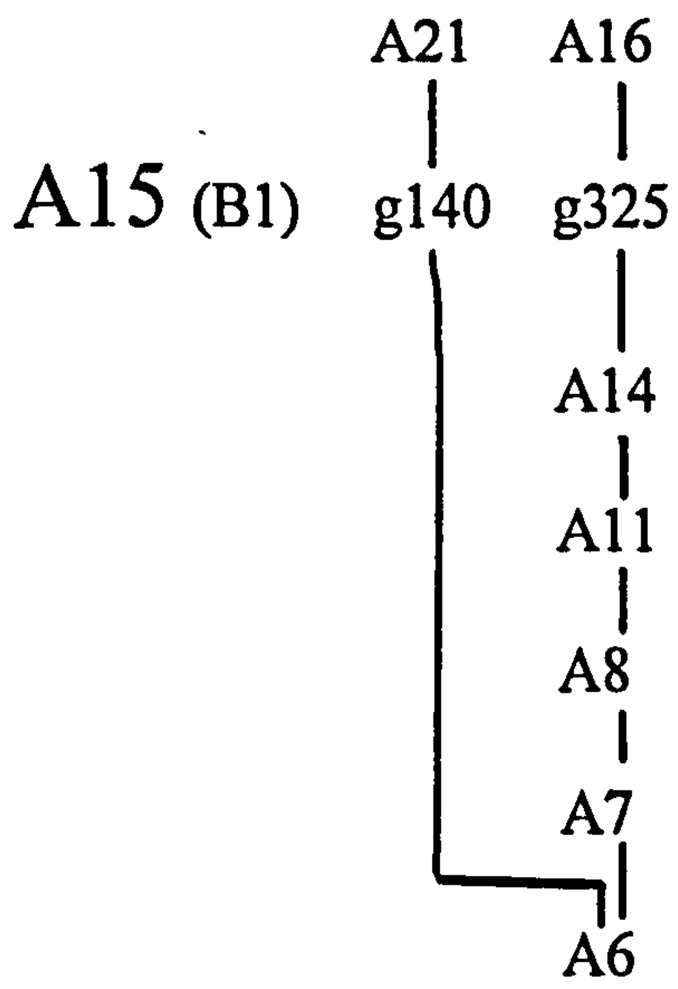

A15 contains contexts which derive from the unexcavated occupation east of the excavated plot. These contexts are fills in the northern and southern boundary ditches which lie between the flood and rubbish layers of A16, and those earlier.

The interpretation of these fills depends largely upon the interpretation of the flood deposits which lie over and under them in the stratigraphic sequence. If A16 and A11 are the result of annual spring flooding, then A15 could be interpreted as deriving from summer and winter seasons between the floods. If on the other hand, and as seems more likely, the flood layers are the result of a slower and less seasonal cycle of rising and falling lake levels, then the fills of these ditches may have accumulated over a period of some years.

One 'wasp' bead (F69899) cannot be used to securely date this deposit series, but its chronological position between the more productive deposits of A11 and A16 can leave little doubt that it also derives from the third quarter of the eighth century, or very little later.
AREA: E
PHASE: B1

A16. 318 rubbish, with wood chips
324 clayey silt with domestic rubbish
339 organic debris on the shore line
342 scattered stones on the shore line
353 scattered stones on the shore
362 row of stones on the northern plot boundary
363 stones on the shore line
369 row of stones on the southern plot boundary
371 scattered stones on shore line
458 sandy silt, with some water eroded bone, and iron pan
459 flooded, water eroded domestic rubbish in silty clay
460 sandy redeposited clay, with domestic rubbish
461 clean redeposited clay
508 rubbish deposited in the area of the later northern lane

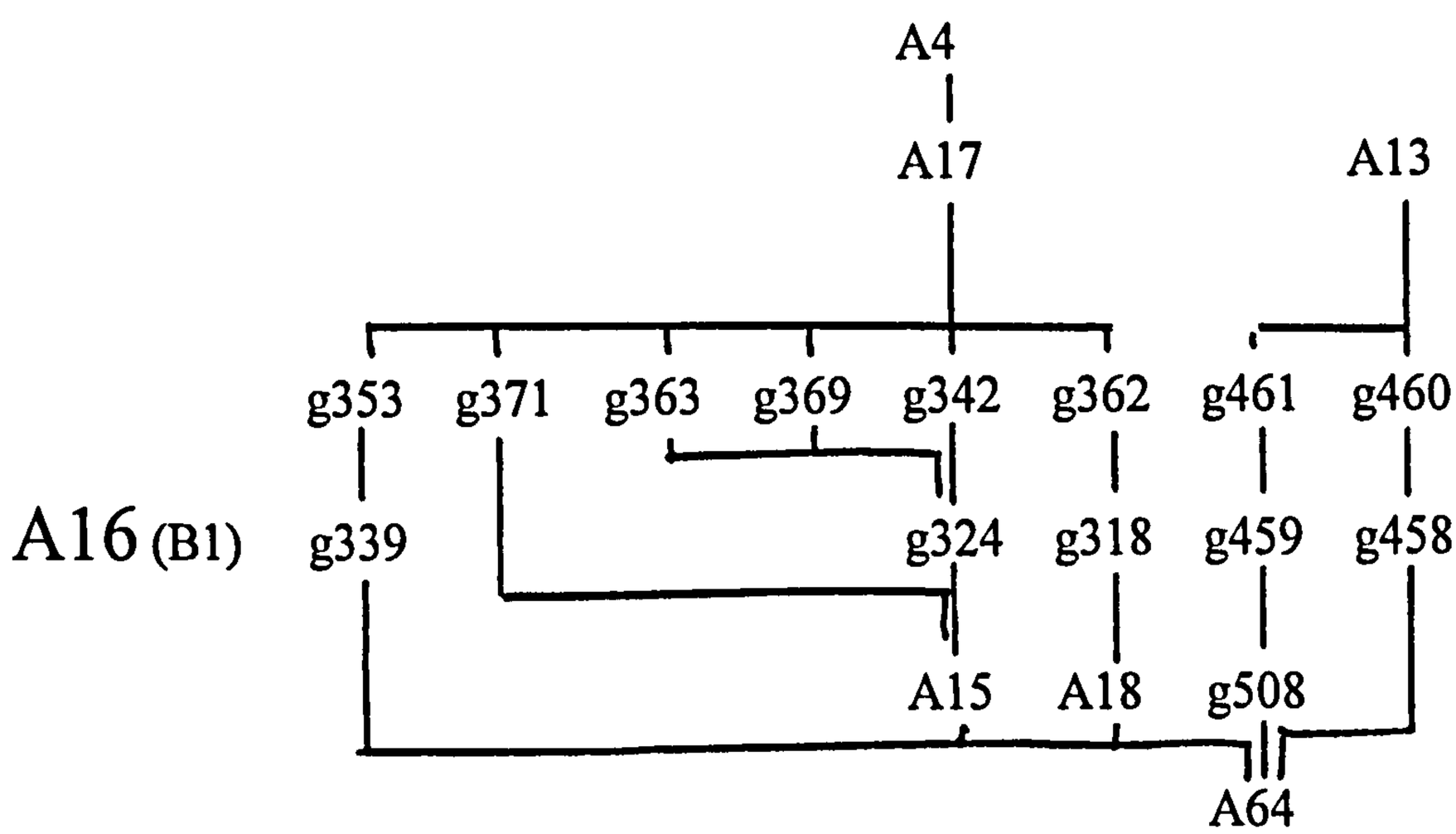

This deposit series forms a plot surface which post-dates the quay or hard foundations (A64), but pre-dates the first building on the plot (A2) and its associated northern fence line (A10) . Included in the A-unit are the redeposited clay layers groups 460 and 461, which were laid over the stone packings of A64. These clay surfacings appear to have been secondary to A64, as they lie over water-deposited sandy rubbish layers among the stones (groups 459 and 458).

The deposit series as a whole consists largely of water-deposited silts and sands, containing domestic rubbish. Those groups laid down further away from the shoreline (g324 and g318) appear to have been deposited under drier conditions.

The southern boundary of the plot was marked by a stone packing, g369, and the northern by another, g362. These

both demonstrate a continuing concern with the boundaries of this plot, despite the fact that it was not permanently occupied in this phase, and was intermittently flooded.

The surface can be given an approximate terminus post quem by the 'wasp' beads (F69826, F69825, F83386) found here. This is a fragile, thin-walled black, red or brown cylindrical bead, with trailed yellow lines of a type which was produced in Ribe, in Denmark, not earlier than AD 760 (Stig Jensen, pers. comm.). Their fragility gives them a short life span, and though the beads may not have had exactly the same dating in Birka, the liklihood is that this surface dates to the second half of the eighth century.

AREA: N & E

PHASE: B1

A17. 317 gravelly sandy, with domestic rubbish
323 silty sand, with domestic rubbish

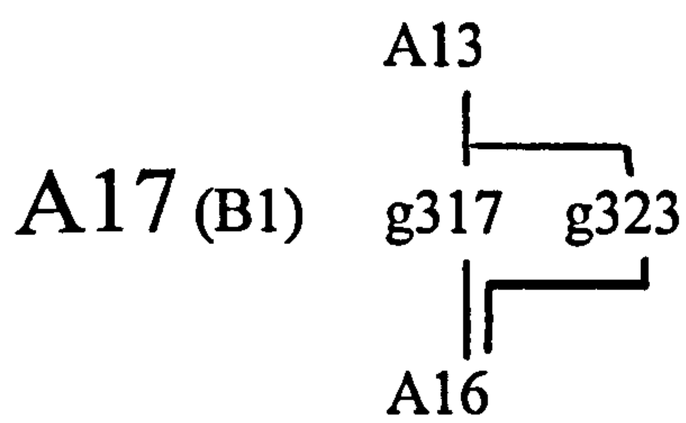

These rubbish layers built up on the sandy shoreline, east of the quay foundations (A64), and post-dating them. The relatively undamaged nature of the finds suggests that this deposit series was not greatly affected by post-depositional disturbance or flooding. It may therefore result from the use of the plot for rubbish dumping during a relatively dry season, or when the water level was at a low point.

AREA: E

PHASE: B1

A18. 320 rubbish deposits, with casting waste
321 sandy rubbish, with less casting waste
512 rubbish in northern lane
with wood flecks

A18 (B3)

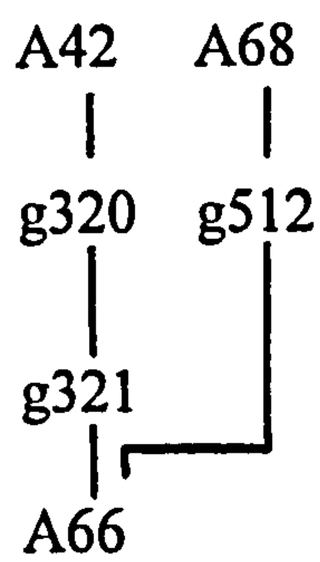

This A-unit represents the deposits accumulated over the earliest surfacing of the northern lane (see A 10), and probably contains the remains of that surfacing (g512). It is clearly contemporary with the first metal working on the adjacent plot to the south, and the copious finds derive largely from industrial copper alloy casting. Unfortunately there is risk of contamination as a result of Stolpe's excavations in the northern part of the A-unit.

The very short duration of phase B2, and the cut edge of fence line and road paving A10 against the northern lane makes the phasing of this deposit series, A18, a little ambiguous. While there is no doubt that A10 belongs in phase B2, the fills over the construction of the road paving, i.e. this a-unit A18, derive from the occupation of the plot during both phase B2 and phase B3. A18 is therefore phased to B3, although it also contains material from B2.

A18 pre-dates the first renovation of the northern building (i.e. A68), and contains a 'wasp' bead (F59758) and a variant of the form (F69893). The dating of this deposit series is very difficult, although the noticeable drop in numbers of the 'wasp' beads so characteristic of the earlier phases does suggest that it may be in the later part of the eighth century, or the early part of the ninth century.

A noticeable concentration of broken moulds from oval brooches of Petersen's type 27 (Jansson's variant B - Jansson 1985) was found in g320. This variant on an otherwise early Viking Age type, which shows Christian influence in its cross decoration, has normally been dated to later than the beginning of the ninth century (B. Ambrosiani, pers. comm.).

AREA: N & E
PERIOD: B3

A19. 192 row of stake holes, southern wall line
272 row of three stake holes, inside building
279 two stake holes inside building
281 two stake holes inside building
284 five stake holes adjacent to hearth g309
285 two post holes in hearth g309
288 southern corner post and two stake holes
292 eastern corner post and two stake holes
303 double post hole in the centre of the building
304 two post holes in the northern wall
305 a group of stake holes inside the northern wall
306 red brown redeposited silty sand, forming a casting floor
309 hearth
377 clay fleck
514 redeposited clay floor
551 post hole, with stone packing
877 stake holes forming a rounded northern corner
881 two stake holes and a small post hole in the southern wall line
895 two stake holes

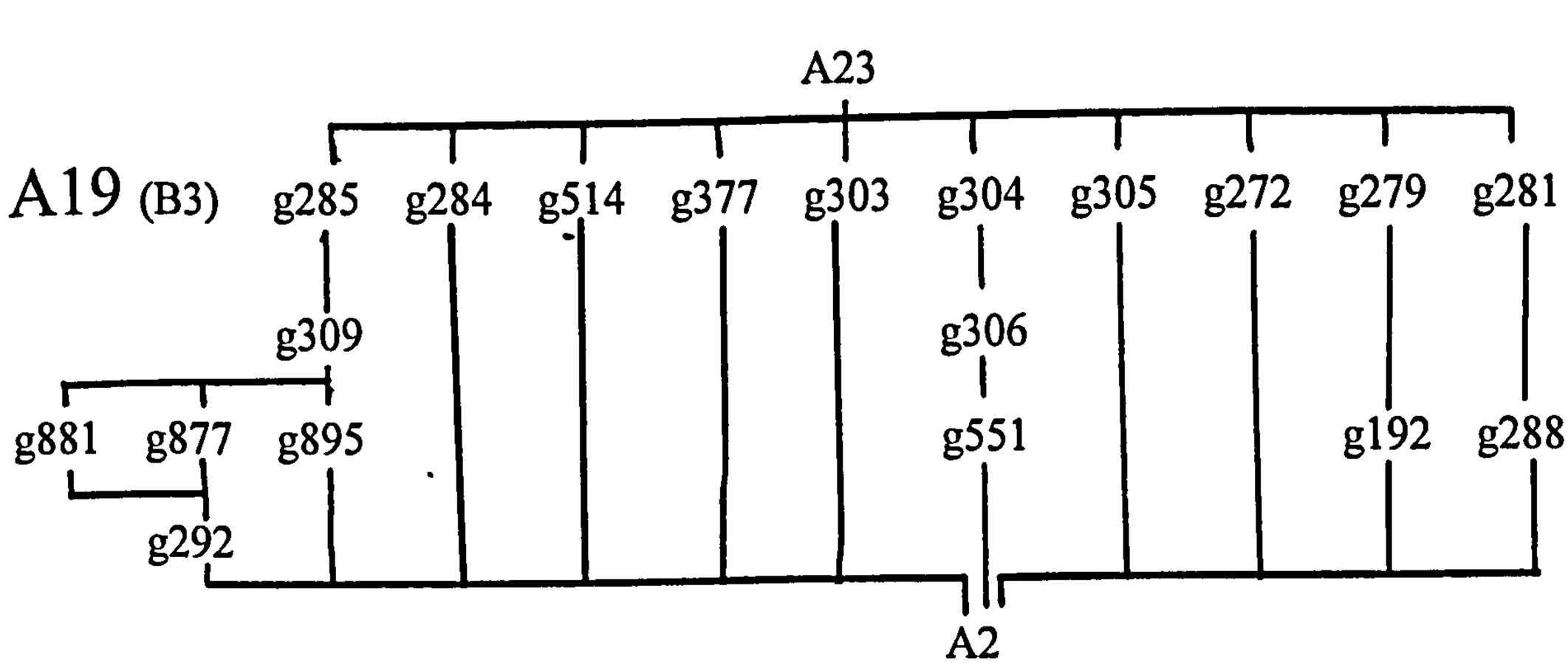

This deposit series is a renovation and extension of building A2, contemporary with the first building on the northern part of the plot A66, and probably sharing a long wall with it. The evidence for a western end wall in A19 is scant, and the likelihood is that the structure was simply a lean-to or covered work area south of the more substantial house/workshop A66.

Slight corner posts were excavated at the eastern, western and southern corners (g292, g881 and g288), and stake holes along the wall lines between indicate that A19 had post and wattle walls. The small size of the corner posts may

explain the placement of g303, a double post hole in the centre of the floor, which may have carried much of the weight of the roof.

It should be noted that g514 is particularly difficult to fit into this A-unit, but logically cannot fit anywhere else. The layer does not appear to extend into the Eastern Area, but may be the same as the clay construction of g309 and the small clay layer g377. The eastern edge of g514 appears to have been cut away by Stolpe's excavations, which did not continue into g306, which he may have believed to be natural subsoil, but could not have continued more than 1.5m further east without being visible on the eastern side of Stolpe's trench. The attribution is generally satisfactory; g514 respects the stake holes of the western wall of the booth A2, which continue to form structural elements in this reconstruction, until they go out of use in A23 (see below).

This building is longer and slightly narrower than A2. It continues to use some of the wattle wall lines from A2 as internal divisions, e.g. g517, which goes out of use during the life of A19, but functions as an internal wall during its construction and is respected by some of the deposits within the building.

The relatively few finds from the construction of A19 suggest that it was regularly cleaned. Contemporary rubbish deposits outwith the building, however, such as A18 and A20, indicate continued copper alloy working as the major activity on the plot.

AREA: N & E

PERIOD: B3

A20. 143 areas of redeposited ash
145 rubbish layers, with large, horizontal bones
147 rubbish layers

It is only with some difficulty and lack of precision that the deposits which derived from the use of the first, and the use of the second jetties can be distinguished. The monumental stone foundation of the second jetty (A21) isolated these groups of layers from the surrounding stratigraphy, and it could not be removed to determine which deposits pre-dated A21. Under these circumstances, it was necessary to move the groups of deposits as high in the stratigraphic sequence as they could logically go. A20 is placed in phase B2, in association with the second jetty foundation A21, but contains residual material from earlier uses of this area.

Three 'wasp' beads (F57035, F52359 & F57027) support the dating of A20 to the third quarter of the eighth century or later. This agrees with the dates for the remainder of phase B2 (see the discussion of B2 for further detail). The finds from this deposit series also include noticeable amounts of copper alloy casting waste, tying it to the initial metalworking in building A2.

AREA: E

PERIOD: B2

A21. 144 foundation framework of large stones
146 post pad of small stones packed in circle and two post holes
865 six stake holes on the south-western edge of the jetty superstructure
866 four stake holes at the north-western end of the jetty superstructure
867 three stake holes inside the jetty superstructure
868 three stake holes on the northern corner of the jetty superstructure
869 six stake holes along the north-western edge of the jetty superstructure
870 post hole at the northern junction of the stone foundation and superstructure
880 structural remains of wooden superstructure

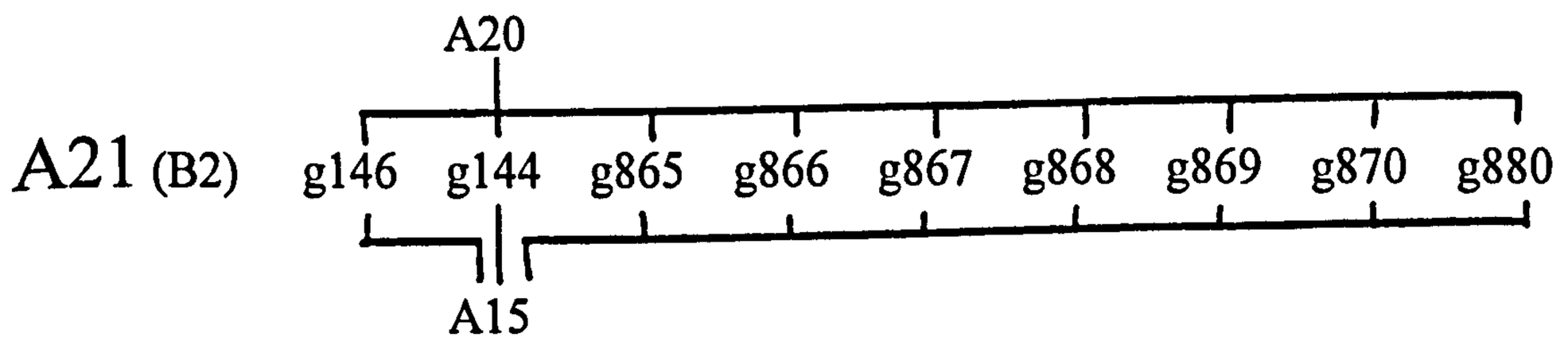

These groups derive from the construction of the second jetty. The massive stone foundation forms a hollow rectangle 13 x 4m, oriented NW - SE across the southern part of the site, about five degrees north of the alignment of the earlier jetty. It divides the northern from the southern plot. The stake and post holes which are included in A21 form a continuation of the stone foundation 3.5m north-westwards. This area was under water during the eighth century.

The relatively slight construction of the wooden part of the jetty is interesting. It is possible that some of the supporting posts from the first jetty continued in use, but regardless of this, it appears that jetty A21 had a wooden superstructure of posts generally not more than 0.1m diameter.

Wood samples taken from g869 (S4197, S4198 & S4200) proved to be of spruce, spruce and fir respectively, while the post or heavy plank in g890 (S4199) was of oak (Charlotte Björdal, Inst. för Virkeslära, Uppsala). The pragmatic use of available sources of timber seems to be usual (see A56

for further discussion), though it is difficult to believe that there would have been a shortage of timber in the hinterland at this early date. The use of oak for the major supporting timber is probably significant, in the light of the use of oak in the first jetty construction and plot boundary (A107 and A6). Its strength and durability as cut timber must have made it particularly desirable in structures which were exposed to significant loads, as the jetty would have been.

AREA: N & E

PERIOD: B2

A22. 57 rubbish deposits in the eastern lane
61 rubbish deposits in the eastern lane
62 small pit with two rubbishy fills
148 rubbish layers in the eastern lane
149 clayey rubbish layers in the southern lane
150 sandy silt, with rubbish in the southern lane
193 sandy silt with rubbish in the southern lane
296 redeposited ash and charcoal

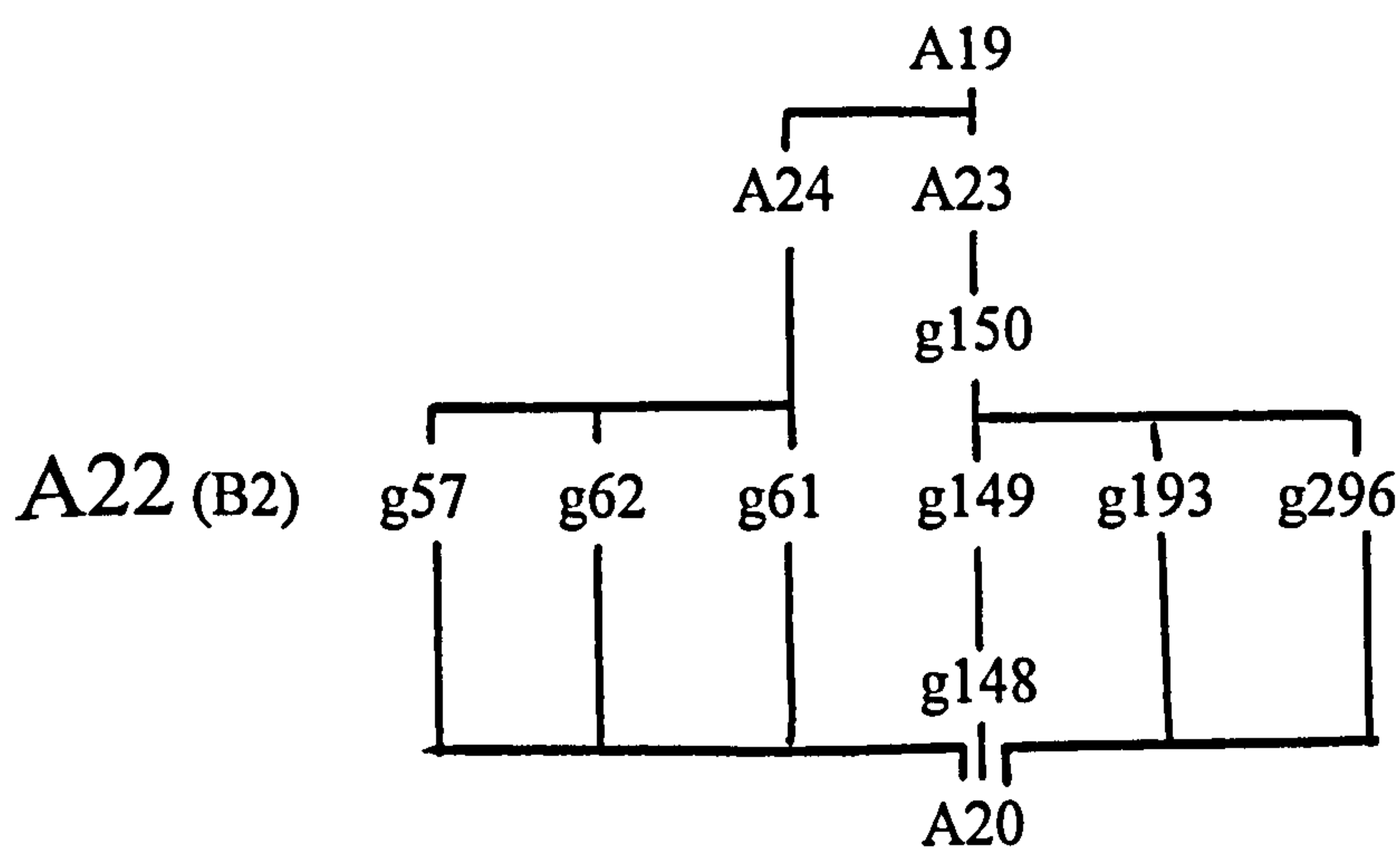

These rubbish layers, which cover much of the southern and eastern areas of the site, form the only stratigraphic link between the area to the east of the plot, and the southern lane. Disturbances in the areas of Stolpe's excavations have caused extensive damage to A22, and the stratigraphic links between many of the groups are weak. Nonetheless, the position of these extensive deposits below the phase B3 occupation of the plot is very clear.

A22 certainly post-dated the construction of second jetty, and the probability is great that it was associated with the occupation of A2. It is stratigraphically later than A20, which consists of rubbish deriving from the very earliest use of the second jetty A21.

AREA: E

PERIOD: B2

A23. 125 two large post holes in the southern wall line
151 stone packing at the eastern end of the southern wall
189 fill of wall bench along the southern wall
191 charred plank in the southern wall line
222 sandy floor layers
252 a large post hole in the southern wall line
273 imprint of barrel or large bowl
274 imprint of barrel or large bowl
275 stake holes near g273 and g274
276 stake holes near g273 and g274
280 fill of square feature by g275 & g276
286 charred beam, upright plank
287 six stake holes in a southern wall line
290 charred beam
291 seven stake holes in a southern wall line
293 domestic rubbish in the eastern corner of the workshop
308 fill in wall bench along the southern wall
467 domestic rubbish layers in the western end of the building
524 laminated rubbish deposits
525 clearance from hearth, ash and charcoal
529 clearance from hearth, ash and charcoal
530 redeposited sand
531 clearance from hearth, ash and charcoal

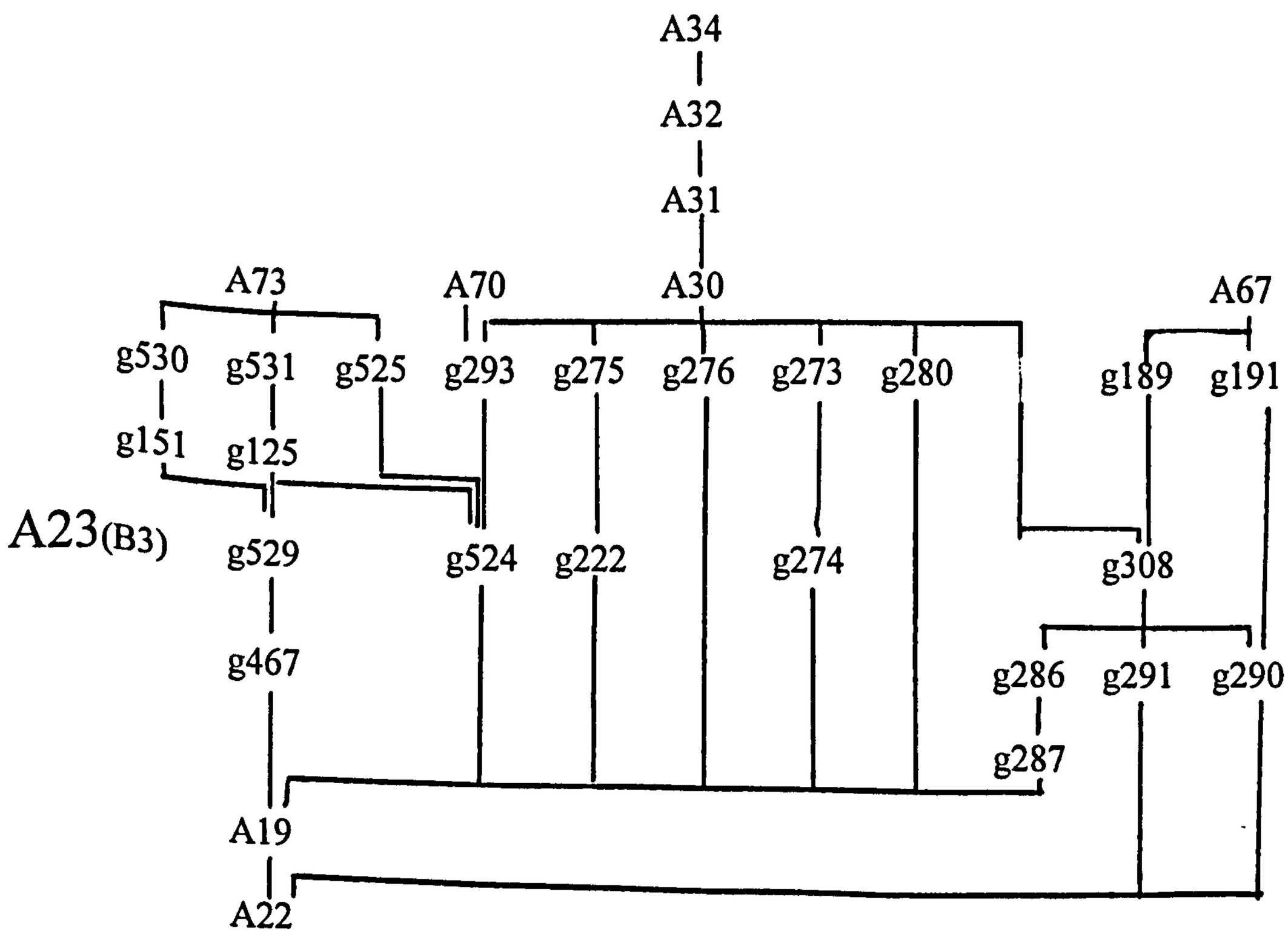

This complex deposit series is the latest of the southern buildings on the plot which survived relatively intact. It represents the use and substantial renovation of workshop A19. The building is 10 x 5.5m, following the orientation of the underlying A19. Along the southern wall, the fill of a wall bench (g189 & g308) establishes a feature which persists through the following renovations of the building up to A34. This bench is bounded to the south by a wall line marked by charred sill beams (g290 and g286), and to the north by the vertical edges of the floor layers g222, which had built up against the bench.

The eastern end wall of the building was cut away by Stolpe's excavations, and the western was extremely unclear, marked only by the shift in character of the layers inside and outside the building. It is possible that the western end of the building was open; the spread of layers in g467 from the inside to the outside certainly indicates that there was an access from the western open area into the building at this point.

In the southern corner of the building was a rectangular area 1.5 x 1m, approximately defined by the stake holes in g275 and g276. This contained the imprints of two successive small barrels or bowls, which had clearly stood semi-permanently in this confined space while the floor layers of g222 built up around them. It is tempting to define this as a cupboard or alcove used for the storage of some type of liquid. A similar confined space lay to the north of this, filled by g280, which was similar to the floor layers of g222. This appears to have been another small cupboard or niche, but no evidence for its function was found.

Interestingly, A23 contained no evidence for a hearth contemporary with the use of the building. Two alternative explanations for this are possible: hearth g309 continued to function from the underlying building A19 of which this is only a renovation, in which case many of the structural features assigned to A23 may have had their origins in A19. An alternative is that this building should be seen as entirely subsidiary to the use of the contemporary northern building A66/68, and that the hearth necessary for metal working was in that building. Great speed is necessary for casting molten copper alloy; only a few seconds can be allowed between the melting and the pouring of the molten metal, before it becomes to thick to cast cleanly (Torbjörn Jacobsson, pers. comm.), and it therefore seems most likely that the hearth g309 continued to be used during throughout the duration of this renovation. AREA: N & E PERIOD: B3

A24. 39 rubbish deposits
52 rubbish, charcoal and burnt clay
53 rubbish deposits
54 redeposited grey green clay
55 rubbish layers in northern lane
56 small post hole
60=40 redeposited grey green clay

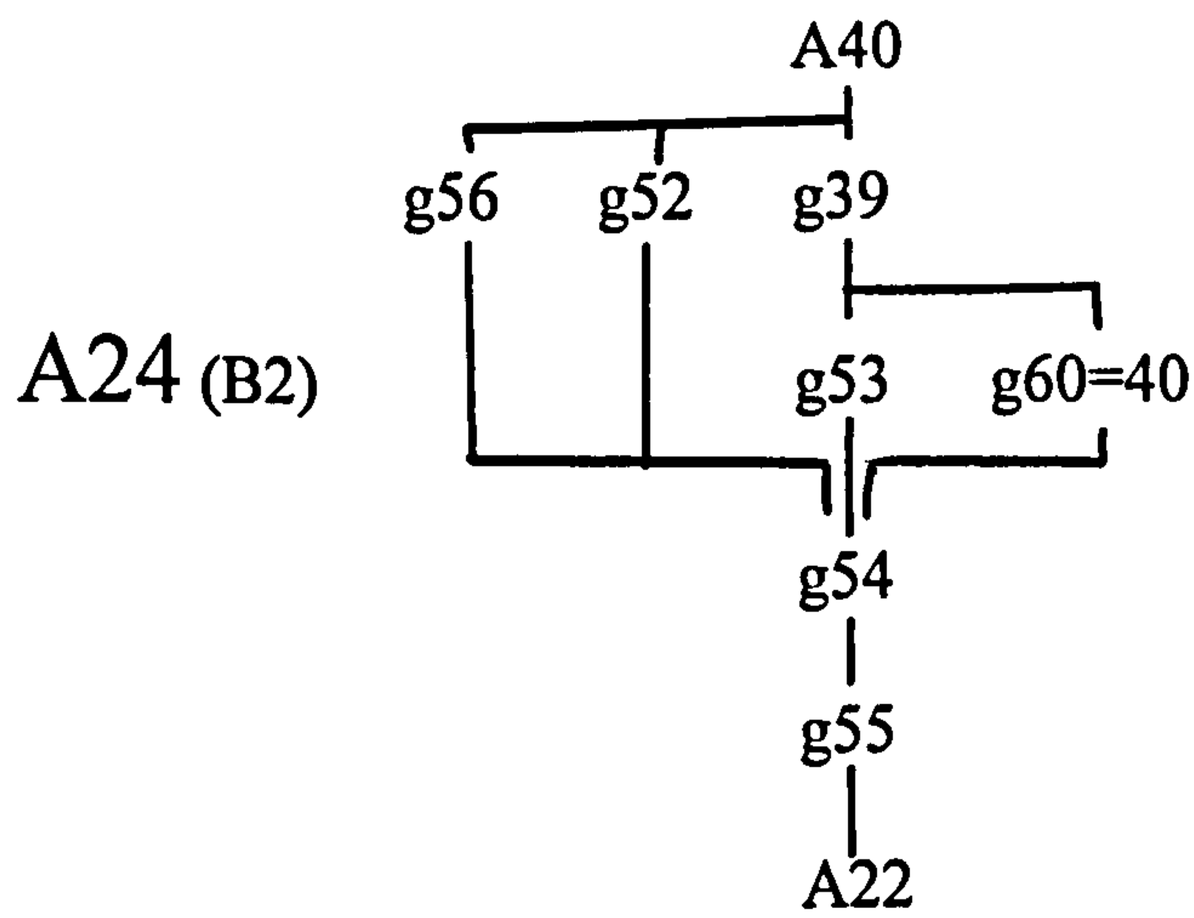

This deposit series, which was cut away by Stolpe's excavations to the south and west, consisted of a series of fills (g40, g60, g54) over the eastern corner of the plot, where the earlier eastern boundary features (A6) had caused problems with subsidence. Over these lay a series of rubbish layers, which contained finds deriving from both domestic and craft activities, among them one 'wasp' bead (F52502) of the late eighth century.

AREA: E

PERIOD: B2

A25. 43 industrial rubbish deposit
924 four post holes in the centre of the building
925 rubbish and activity layers, with metal working evidence
928 activity layers with metal working evidence

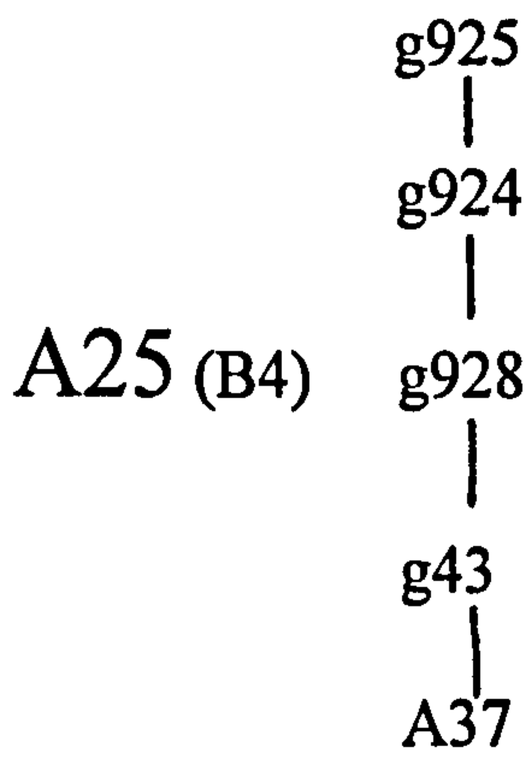

This deposit series was the very fragmentary remains of the latest surviving building on the northern part of the plot, in the area affected by Stolpe's excavations.

The structural evidence from this building is so exceedingly slight that it is impossible to attempt to associate it with surviving material from the northern area, or to say anything about the character of the building. On the basis of the finds and the nature of the deposits, it is clear that the layers must be phased to B4, when copper alloy casting was still at its peak. These deposits are contemporary with A40, which consists of rubbish layers in the northern lane probably deriving from the use of this building.

AREA: E

PERIOD: B4

A26. 28 domestic and industrial rubbish in the northern lane
93 redeposited burnt material in the eastern lane
94 isolated stake hole in the eastern corner
95 redeposited grey green clay in the eastern corner
196 laminated rubbish layers

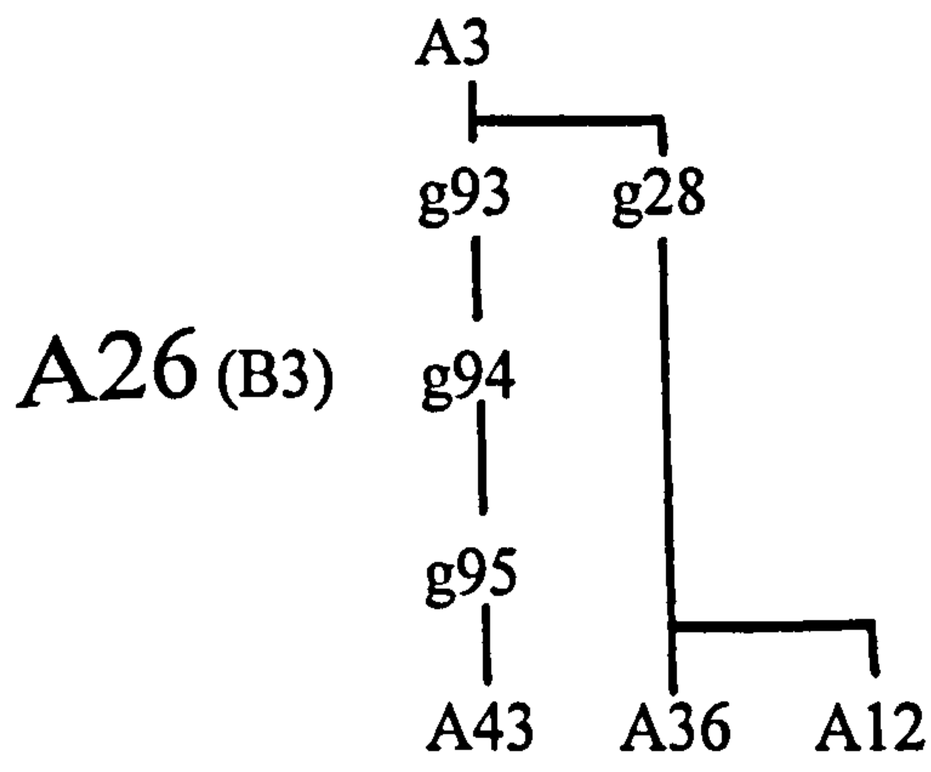

These rubbish deposits in the eastern end of the northern lane are stratigraphically later than the renovation of the northern building (A12), but in all probability derive at least partially from its use. G95 follows the pattern established in A1 of a substantial redeposited clay layer over the earlier boundary features (A6) forming the basis for the use of the eastern corner of the site. Clearly subsidence in this area had continued to be a problem.

Despite the weak stratigraphic relationship between g196 and the remainder of the deposit series, it was grouped here because it demonstrably post-dates building A66/68 and is contemporary with A12.

Typically, the rubbish deposits in A26 contain large amounts of copper alloy casting debris from the contemporary use of the plot.

AREA: E

PERIOD: B3

A27. 38 boundary ditch on northern plot boundary
50 domestic rubbish and charcoal
51 redeposited ash
67 industrial rubbish layers on the eastern plot boundary
68 sill beam on eastern plot boundary

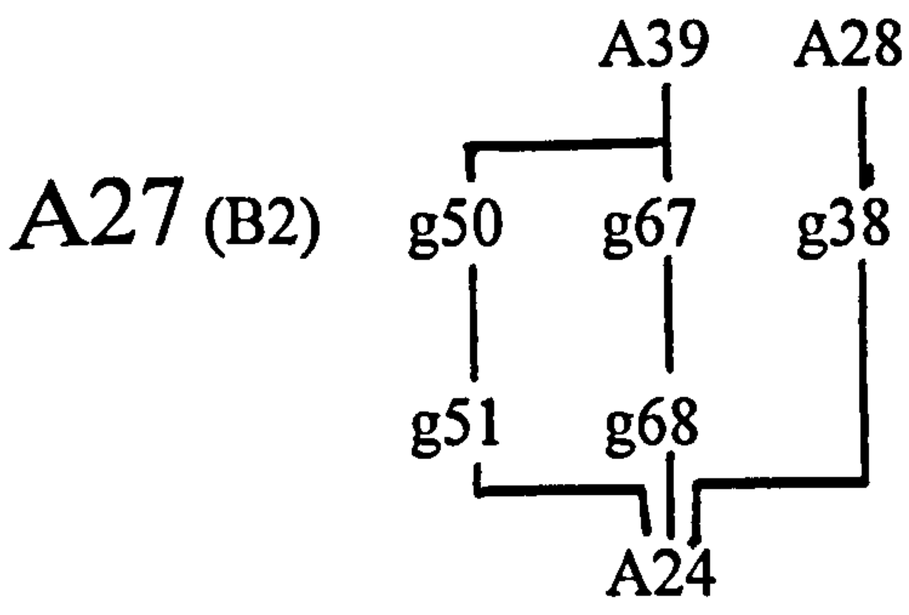

This deposit series marked the abandonment of the latest phase of the northern boundary ditch (g38), and its progressive infill with domestic and industrial rubbish. The importance of this as a major structural change in the organisation of the site should not be underestimated. After this point in time, it is possible that access to the excavated plot could be gained from a lane or path along the eastern side of the site, which in this a-unit was marked by a sill beam (g68) in a shallow cut on the plot boundary.

The rubbish layers in and around the eastern plot boundary (g67) also produced a clipped Abbasid dirham of Madinat Jayy dated to AD 778-9 (F47620) which provides a terminus post quem for the whole phase.

AREA: E

PERIOD: B2

A28. 35 nine stake holes
36 small pit filled with rubbish
37 rubbish layer
107 working surface/rubbish layer

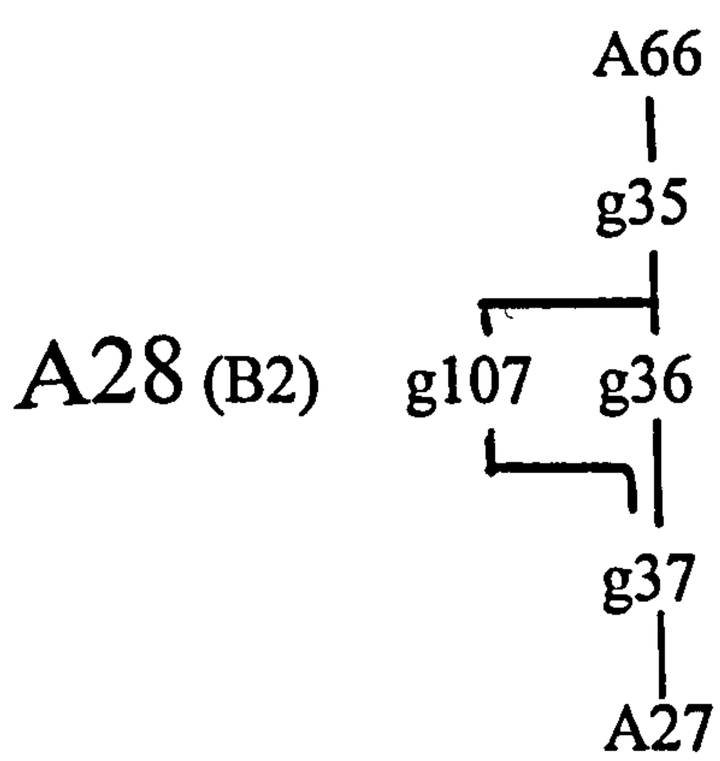

These deposits built up outwith the earliest building on the plot, A2, and appear to have formed a working surface continuous with the production inside the building. G35, which consists of nine stake or small post holes set in a regular square arrangement of 3 x 3, has clearly been the base for a piece of fixed equipment or furniture. Its function is, alas, irretrievably lost.

The finds from this deposit are relatively few, and although they contain some copper alloy casting debris, including moulds, crucibles and droplets, the small absolute amounts indicate that the surface was probably kept free of substantial debris, in contrast to the contemporary surfaces in the lanes around the plot.

AREA: E

PERIOD: B2

A29. 132 redeposited burnt material in use layers
133 stake holes forming a wall line with right angle corner
134 use/occupation deposits
136 charcoal layer

These deposits built up within workshop A2, and stretched out through the line of the north-eastern edge of A2, onto the surface formed by A28, with which they are contemporary. Their extent indicated that the eastern end of the northern wall of A2 was open, giving access to the plot outside.

The finds indicate that the rubbish deposits here derived largely from copper alloy casting, but they also included other, more domestic debris, including noteably a comb of a so-called 'Frisian' type (F53246), dating to the end of the eighth century (Michél Carlsson, pers. comm.).

AREA: E

PERIOD: B2

A30. 221 trampled, clayey laminated layer with industrial waste
237 group of four stake holes in the east end of the building
283 group of stake holes in the east end of the building
301 stone filled post hole

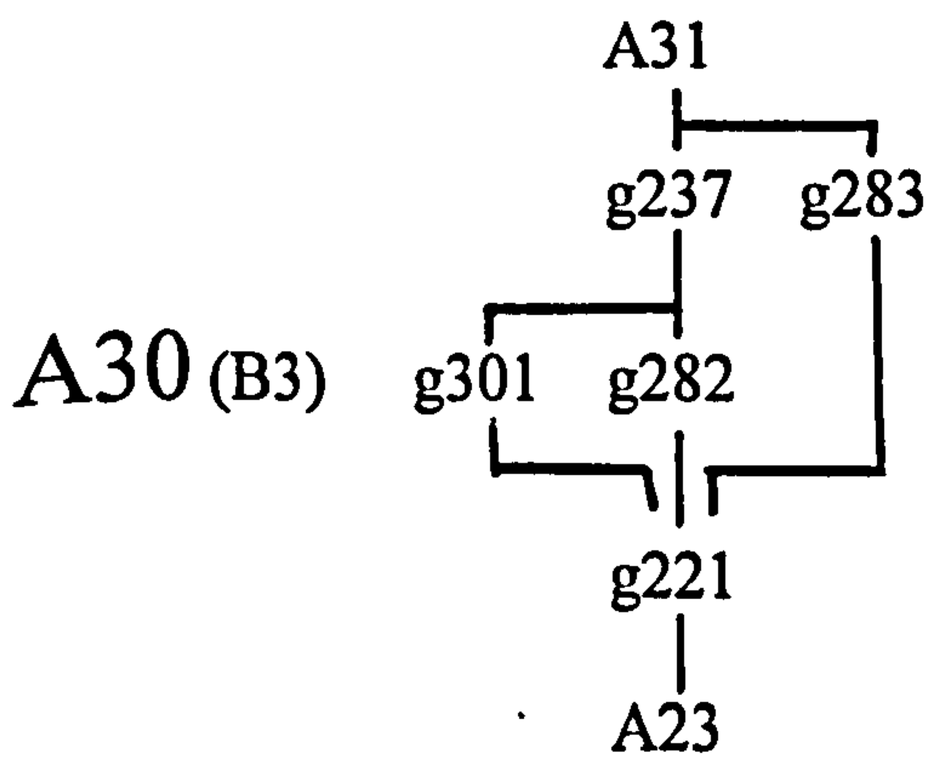

These groups derive from the continuing use of building A23 as a workshop. G221 is an extensive spread of laminated clay floor layers incorporating copious amounts of metal working debris. Associated with this surface are a couple of groups of stake holes deriving from internal fittings contemporary with the use of the floor surfaces. The deposit series respects the southern wall line of A23, but extends northwards through an opening in the northern wall line into building A66. This gives the only, and very important, evidence for the presence of a door linking the two buildings as one functional unit.

The continuing lack of substantial evidence for the character of the northern wall line of this building is very interesting. A sill beam construction would, of course, be invisible except as a break in the deposits, under the poor conditions prevailing on this site. Alternatively, the possibility that the southern building was a lean-to should be considered.

AREA: E

PERIOD: B3

A31. 215 laminated use/occupation deposits
216 redeposited sand and clay
220 areas of in situ fire layer

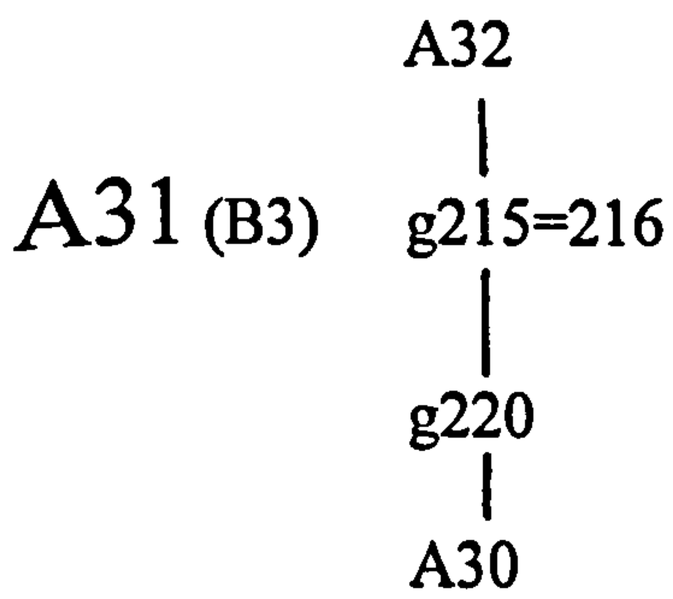

These deposits represent the levelling up and use of workshop renovation A30, still within the building established in a-unit A23. The groups respect the northern edge of the wall bench g178/308 (in A23), and also form a straight line along the northern wall of this building, defining its position with a clarity and regularity which strongly suggests that it was based on a sill beam foundation. The eastern wall is cut away by Stolpe's excavations, and the western wall lay in the Northern Area, isolated from this deposit series by the most westerly of Stolpe's trenches.

All the deposit series between A19 and A33 can be seen as progressive use and renovation of the same building. The finds from A31, as from all the others, strongly suggest that the building continued in use as a casting workshop. Although no hearth is visible in this particular a-unit, it may have been cut away by Stolpe, or lie in the extension of the same building into the Northern Area.

AREA: E

PERIOD: B3

A32. 205 stake holes in the southern outer wall of the workshop
207 row of stake holes in the southern wall
209 hearth
210 row of stake holes in southern wall
217 clean sandy silt - casting floor
218 stake holes and a post holes in an internal wattle wall
219 post hole and plank in the southern wall
223 diffuse line of stake holes south of the hearth
224 line of stake holes forming part of the southern wall, turning a corner to form a western wall
225 two stake holes
226 three stake holes
227 a line of stake holes marking a northern wall westwards from the end of g224
228 three stake holes
229 five stake holes
230 two stake holes
231 double post, and stake hole
232 square post hole
233 stone packed post hole
234 stone packed post hole
235 square post hole
236 square post hole
298 row of three stake holes

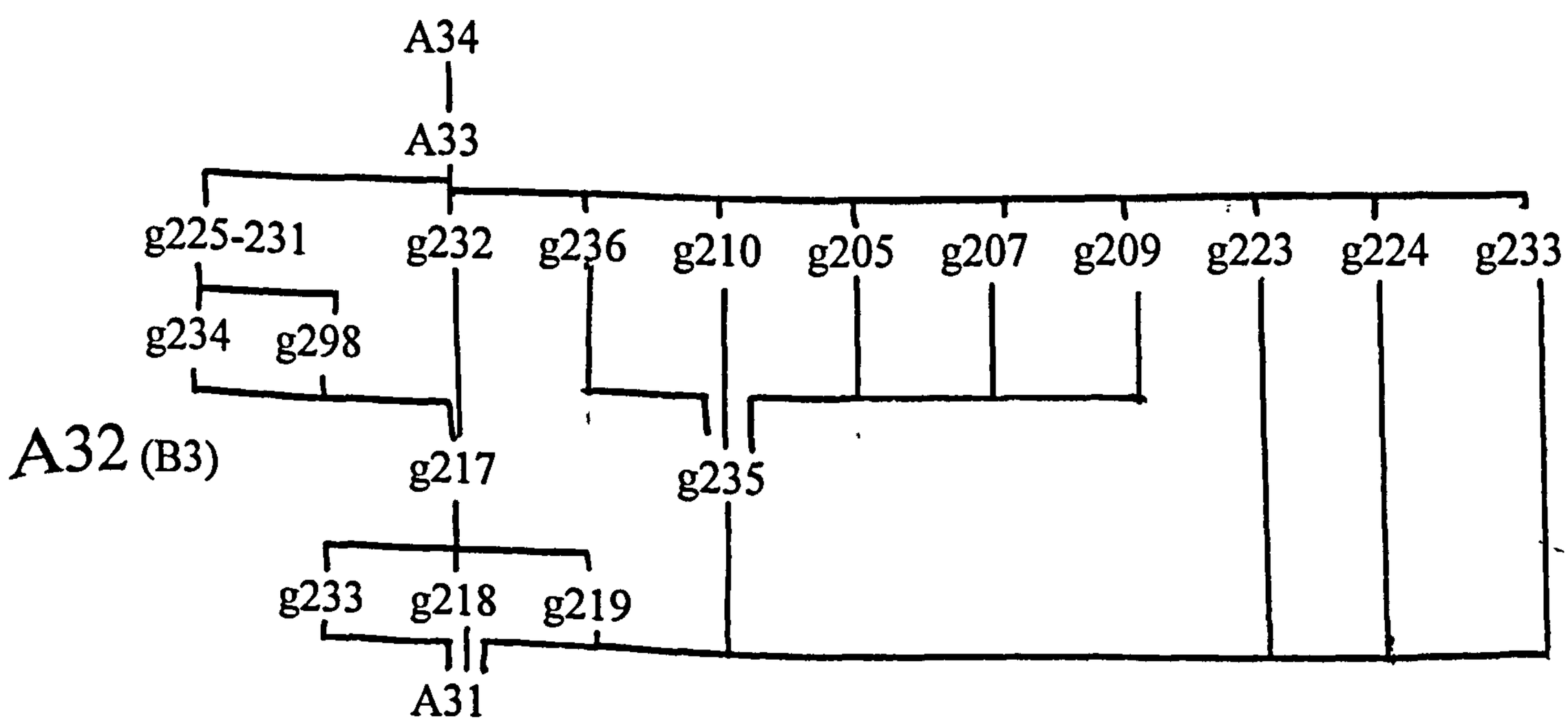

A32 was a substantial rebuild or renovation of workshop A19/23. Although the established pattern of a southern wall bench persisted on the same line, and apparently with the

same fill, the northern edge of the bench g178/308 (A23) was reinforced with a new wattle line (g210).

The bizarre proliferation of stake and post holes (g225-231 &c.) is grouped here because: g223 is under the clay floor of A34, as is part of g224. G224 forms an internal line which is respected only by the layers of A33 (the occupation of this building) and not by anything else at all in the entire stratigraphic sequence of the Eastern Area. The bitty, discontinuous layers of A33 respect the vague lines and divisions formed by the other small groups of stake holes, and leave a gap which is defined by the large post holes of g231-236 in the centre of the building.

The implications of all these internal divisions are unclear. G227 appears to be an internal wall line parallel with the long axis of the building. The possibility that this may be the edge of another wall bench in the northern end of the building, against the north-eastern long wall, is worth considering, despite the lack of other evidence for such a structure.

The area around the hearth appears to have been subdivided, with little or no accumulation of activity layers between the post holes g231-236. This suggests that they provided support for some structure or piece of furniture which covered the underlying material, preventing the deposition of new rubbish. The area between the posts measured 1.5 x 0.5m, in an irregular oval.

G298 gives the continuing line of the wall bench or southern wall lines into the eastern area, and although the group is stratigraphically isolated because of disturbance by Stolpe, the alignment is quite clear.

AREA: E

PERIOD: B3

A33. 186 use and rubbish deposits
188 use and rubbish deposits
206 hearth clearings from hearth g209 (A32)
212 use and rubbish deposits
213 fill and levelling - possibly packing for renovation of a corner post
214 hearth clearance of ash and charcoal
242 hearth clearance
278 laminated use layers and working surfaces

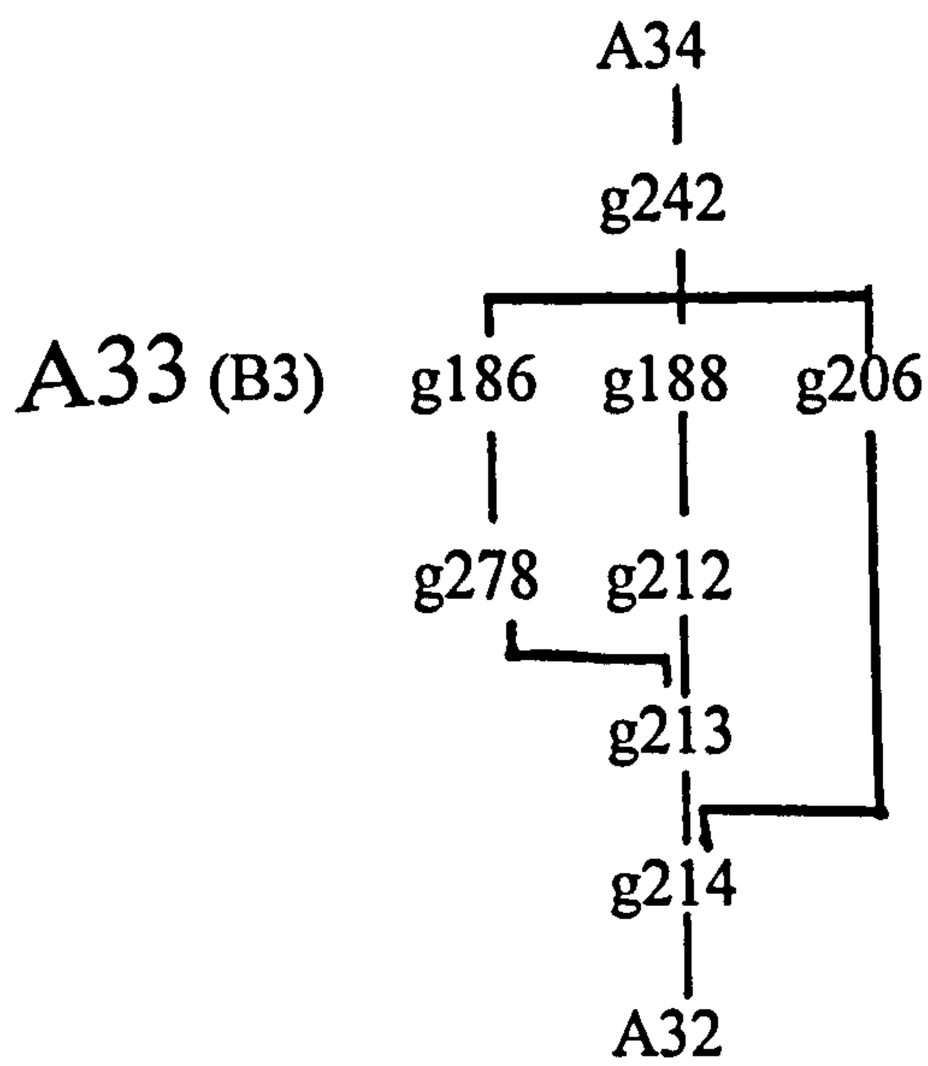

These limited, discontinuous layers of primarily industrial debris derive from the use of A32, and should be considered in association with the description of A32. The stratigraphic position of the groups in A33 is not in doubt, but their geographical distribution provides a certain degree of information about the organisation of the building as a whole.

The area around the hearth, g209 (A32), was dominated by ash and charcoal layers cleared from the hearth (g206). These, however, were relatively limited in their distribution, and on the western edge of the deposit series, g188 formed the fills in two rectangular features, each c. 1.5 x 1m, and both cut away on their western edges by one of Stolpe's trenches. These were roughly outlined by stake holes in A32. Although the function of these features is as yet unclear, it is interesting that the deposits contained remarkably little metalworking debris of any sort, particularly in comparison to g186, which lay only 0.2m north of g188. There was a marked functional sorting of the finds between these groups.
AREA: E PERIOD: B3

A34. 168 working surfaces covered with laminated debris
169 clean redeposited sand, in door area
170 post hole beside door opening
171 post hole in wall line
172 stake holes in the workshop (internal wall or fire screen)
173 clearance from hearth, ash and charcoal
174 cut and fill for post hole in wall line
176 clearance from hearth, ash and charcoal
177 post hole, or more probably, small warming hearth
178 working surface, with laminated industrial waste
179 clearance from hearth
180 clearance from hearth
181 clean, redeposited sand
183 group of stake holes forming a diffuse internal wall line
184 three stake holes in northern wall line of workshop
185 redeposited grey green clay floor layer
187 industrial deposits and sandy ash
204 birch bark and ash
299 six stake holes inside the building

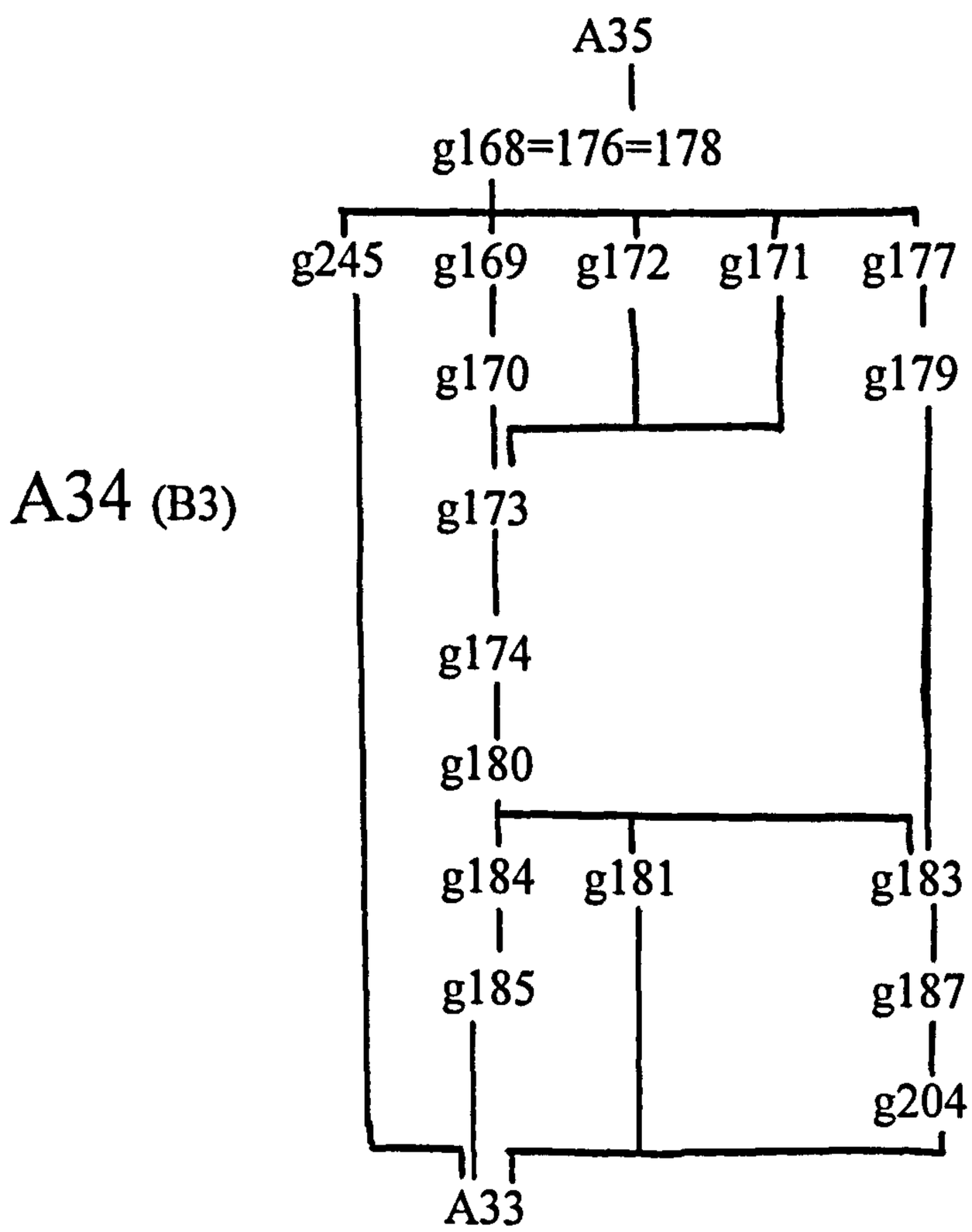

A34 marked the rebuilding of A32 and its use. Substantial structural changes in the internal organisation of the building made this an important shift in the stratigraphic

sequence. A floor of redeposited clay (g185) extended over the area previously occupied by the southern wall bench g178/308 (A32).

No evidence survived for the nature of the southern wall line of the building, although a small group of stake holes in the northern wall line (g185) suggests that this may have been of wattle. The eastern wall was cut away by Stolpe's excavations, and the western end of the building was also detatched by one of the nineteenth century trenches. It lay within the Northern Area.

Three pieces of a composite, single-sided antler comb, damaged by fire, from g180 (F52129, 56895, 56812) fitted with a fourth piece from g176 (F51736), also in this deposit series. Otherwise, as was usual in the southern building, the finds from these groups tended to reflect the use of the building as a metalcasting workshop.

AREA: E

PERIOD: B3

A35. 153 charcoal and soot
154 water sorted gravel and small stones
155 fill layer, or hearth clearings
156 working surfaces and 'occupation' deposits
158 rubbish deposits
159 laminated working surfaces
160 clearance from hearth
161 redeposited grey clay, levelling and floor
162 fill of sandy silt, relatively clean
163 stone packing
164 clearance from hearth
165 hearth
166 redeposited yellow sand, casting floor
167 double post hole, probably internal
175 redeposited grey sandy clay
197 two stake holes
198 a group of stake holes in the southern part of the building
199 large amorphous group of stake holes inside the building
200 stake holes, as g199
201 post hole
202 patch of floor layer
203 row of stake holes in the southern wall line
243 post hole beside hearth g165
244 post hole in the centre of the workshop
253 clearings from hearth g165
254 clearings from hearth g165
255 clearings from hearth g165
256 domestic rubbish
257 clearings from hearth g165
258 burnt wall line for eastern end wall, stone packing and stake holes
265 post hole in eastern wall line
266 redeposited clay floor
267 stake holes in the eastern wall line
268 stake holes in the eastern wall line
269 redeposited clay floor
270 stake holes in the southern wall line
297 post hole in the southern wall line

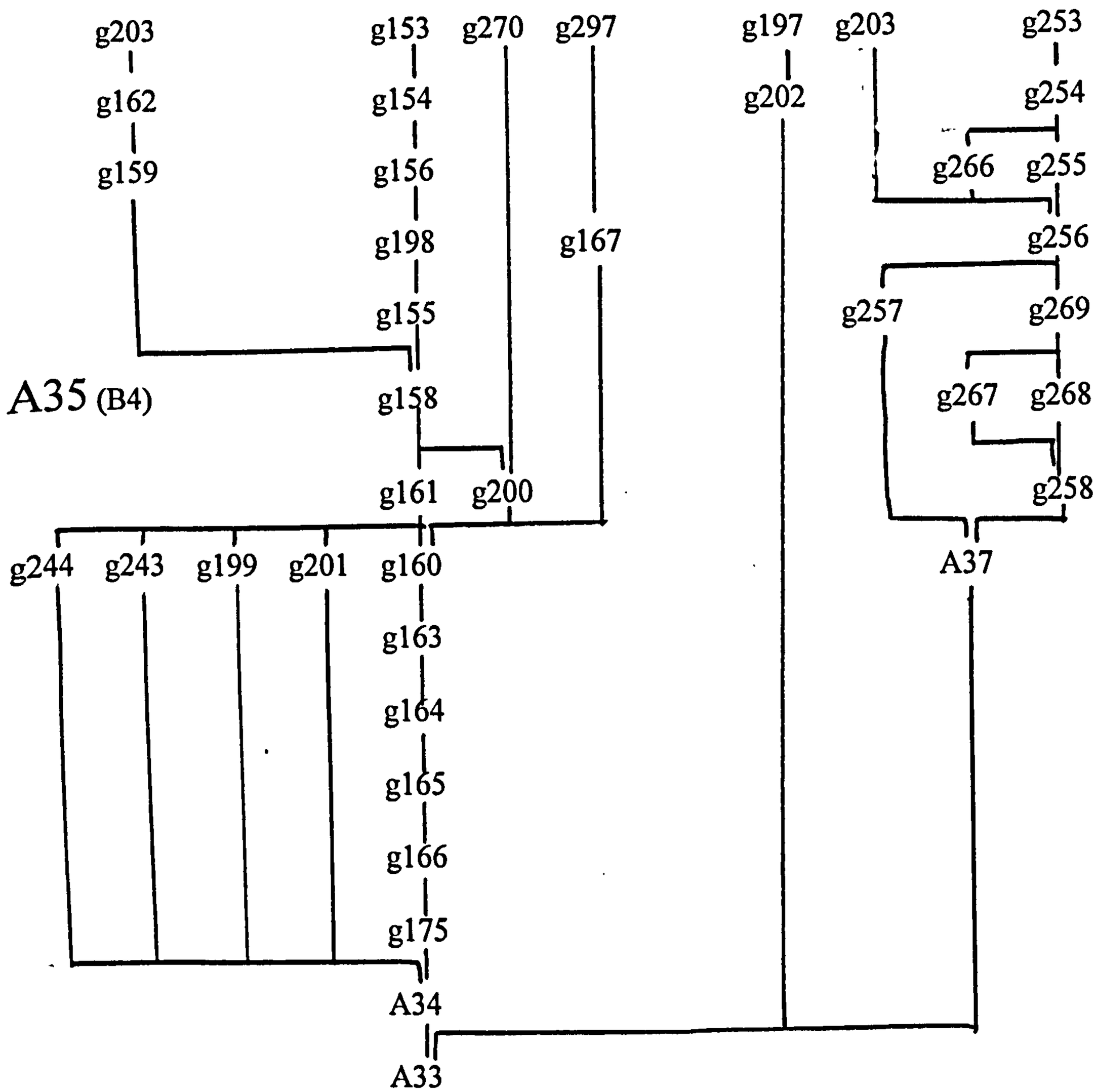

This deposit series is the very fragmentary remains of the construction and use of a building on the southern part of the plot, truncated by Stolpe's excavations. Little can be said about the structure of the building, but the spread of use deposits respects a wall line 0.1m further south than the preceeding building A34. This difference is only marginal, but the scant evidence for a post and wattle wall provided by g270 and g297 suggests that it may be the result of a rebuild.

Groups 158 and 161 respect a NW - SE line parallel with the wall and defined on its north-eastern edge by groups of stake holes (e.g. g198 & g199). This appears to be a wall bench 1.5m wide, although its structure is less clearly defined than was that in the buildings underneath (g178/308, A23).

A hearth, g165, was bisected by a sub-rectangular pit

excavated in the bottom of one of Stolpe's trenches. Despite this, it was clear that the hearth was oriented along the long axis of the building, and was oval, 1.2 x 0.6m, and built of small stones mortared with clay. A post hole and the north-western end indicated that ancillary structures were probably present, though it is not clear what these might be. An area of water-sorted gravel at the north-western end of the hearth (g154) suggested that there may have been a hole in the roof over the area of the hearth, presumably a smoke hole.

Groups 243-270 were cut away from the remainder of the building by Stolpe and are grouped here on the basis of their neat structural fit into this building, and on the sequence of structures underneath them. Given the uncertainty of their stratigraphic relationship to the remainder of the sequence, they were moved phased as late as was compatible with the finds from the deposits. This is the only occasion when the eastern wall of a building survived, as it happened to fall precisely between two of Stolpe's strip trenches. The surviving NW - SE length of A35 within the Eastern Area is therefore 5.5m, and it was 5.5 wide. The western end of the structure lay in the Northern Area.

The finds from A35 indicate that the building continued to be used for the production of cast copper alloy objects, particularly oval brooches.

AREA: E

PERIOD: B4

A36. 32 rubbish layers in the northern lane
33 sill stones set in clay on northern plot boundary
44 rubbish layer in northern lane
302 domestic rubbish in the northern lane

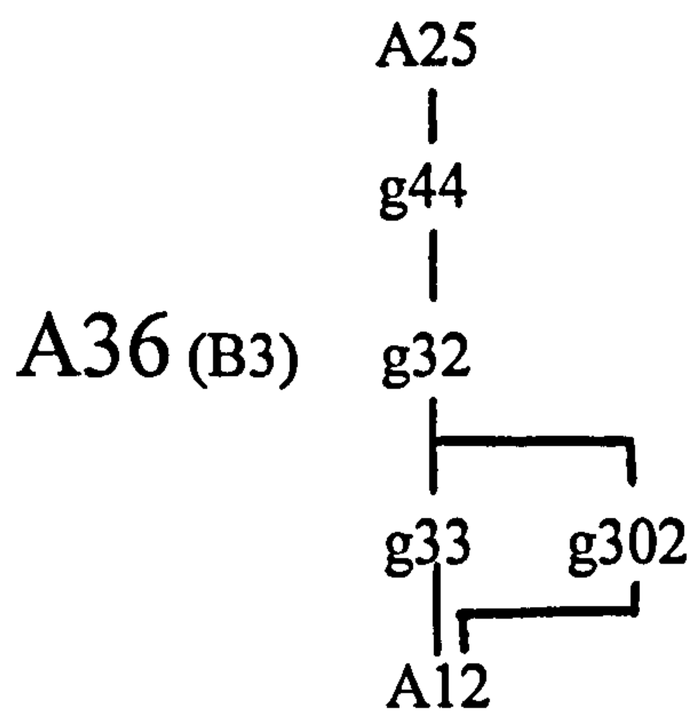

These rubbish layers in the northern lane derived from the use of the renovation of building A66, i.e. A12. G33 is a line of sill stones which continues the line of the plot boundary and north-eastern wall of the building eastwards out of the excavated area. It probably formed the foundation for a fence along the plot boundary, or for the surfacing of the lane itself. Despite evidence from the underlying deposits (e.g. A22) for the existence of an open area, or indeed a lane, to the south-east of the plot, this north-eastern boundary line is persistent. It should, perhaps, be seen as the boundary of the lane itself, rather than the boundary of the plot.

The finds from these deposits include large amounts of copper alloy casting debris, with notable concentrations of particular types of moulds for oval brooches. Petersen's type 27 (Jansson's variant A - Jansson 1985) is the commonest, with large amounts of P37 also occurring in S1868 (g32).

AREA: E

PERIOD: B3

A37. 17 post hole in the north-eastern wall line
20 post hole in the north-eastern wall line
24 post hole inside the northern building
25 use and occupation deposits in the northern building
26 post hole in an internal wall line
29 post hole
48 sill stones in the north-eastern wall line
121 use and occupation deposits
122 fragment of clay floor
127 four post holes in an internal wall line
128 sill stones in a wall line
129 post hole
238 gable post hole in massive stone packing
239 domestic rubbish in the eastern gable line
240 two stake holes in the eastern gable line
259 burnt wattle and daub in the eastern gable line
260 post hole in the eastern gable line
261 redeposited clay floor
262 stake hole in the eastern gable line
263 domestic rubbish in the eastern gable line

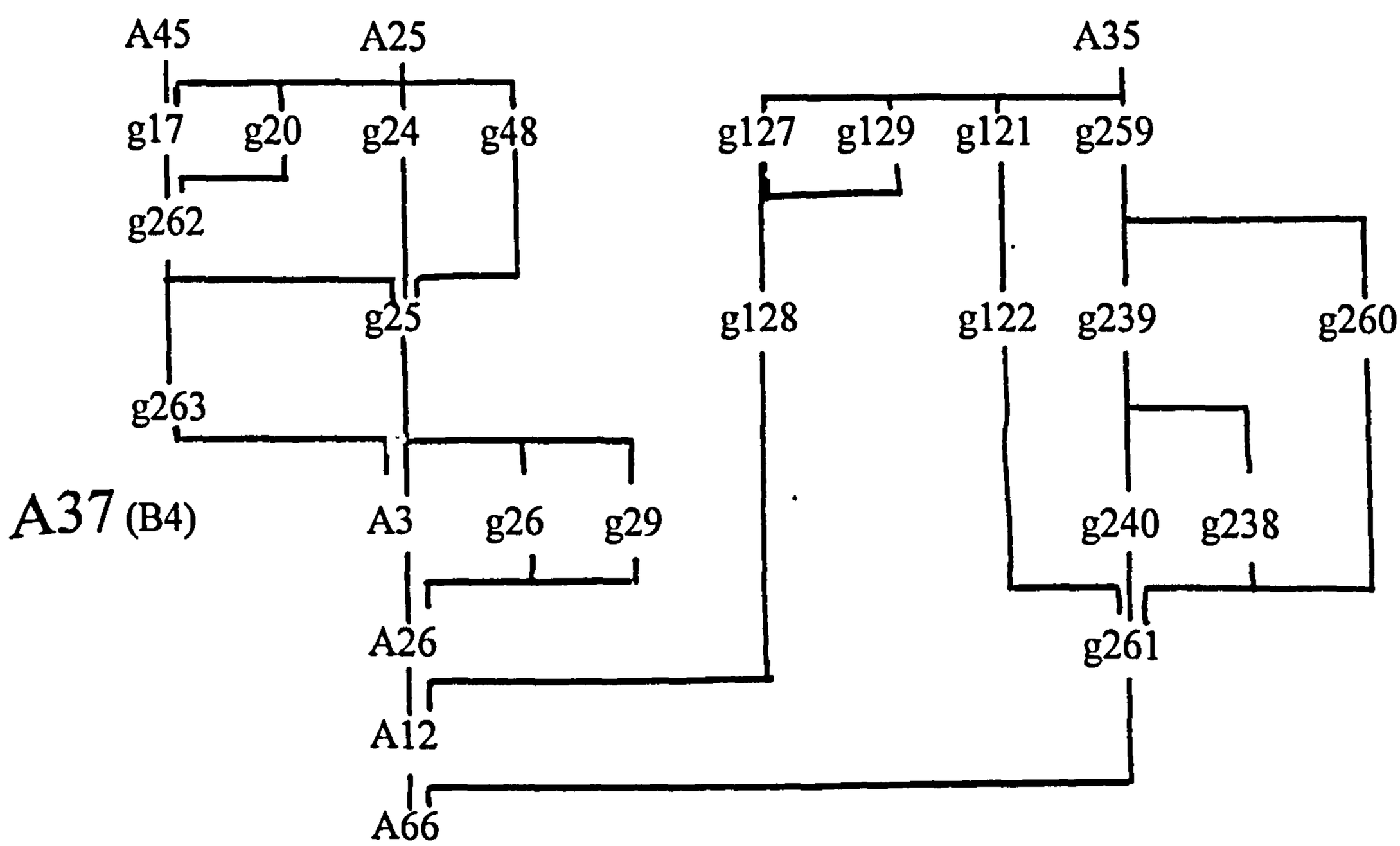

A37 is the use and renovation of the northern building post-dating A12. It is contemporary with a series of rubbish layers in the northern lane (A45) which link to it through an opening, presumably a door, in the northern wall.

This deposit series is badly damaged by Stolpe's excavations. Nonetheless, it is possible to make some deductions about the structure of the building. It was at least five metres wide (NE - SW) and possibly as much as six metres. The north-eastern wall is marked by small groups of sill stones and post holes (g17, g20, g48, g128). The fragmentary remains of the eastern end wall were isolated from the remainder of the building, but the size of the surviving post holes, particularly g238 and g260, suggest that it may have carried much of the load of the roof. The building probably had a gabled roof, if the load was carried on the end walls. Group 259 demonstrates that the wall between the gable posts was of wattle and daub.

Several internal posts (g127 & g26) appear to mark an internal wall line immediately south-east of an entrance in the north-eastern wall which is marked by the spread of occupation deposits (g25) through the wall line. This door was at least 1.5m wide.

Finds of moulds, crucibles and scrap metal from A37 indicate continued copper alloy casting in this building.

AREA: E

PERIOD: B4

A38. 69 rubbish layers in the northern lane
70 levelling deposit of grey-green clay
71 pair of large post holes
72 domestic rubbish layers in the northern lane
73 domestic rubbish layers in the northern lane.
74 domestic rubbish layers in the northern lane.
75 redeposited ash and domestic rubbish layers
76 stone packing
77 levelling/fill layer in the eastern corner of the plot
78 levelling/fill layer in the eastern corner of the plot
79 hole from deeply set plank or stave
80 primarily rubbish layers, uncrushed bones
81 fill and/or levelling deposits
82 levelling deposit in the eastern corner of the trench.
83 rubbish deposits in the northern lane
84 rubbish deposits in the northern lane
85 remains of resurfacing of the northern lane
88 ash layer
89 fill/levelling deposit in the eastern corner
264 large post hole in the eastern corner of the trench
295 stone packing in the eastern corner of the trench, possibly post hole.

A38 (B4)

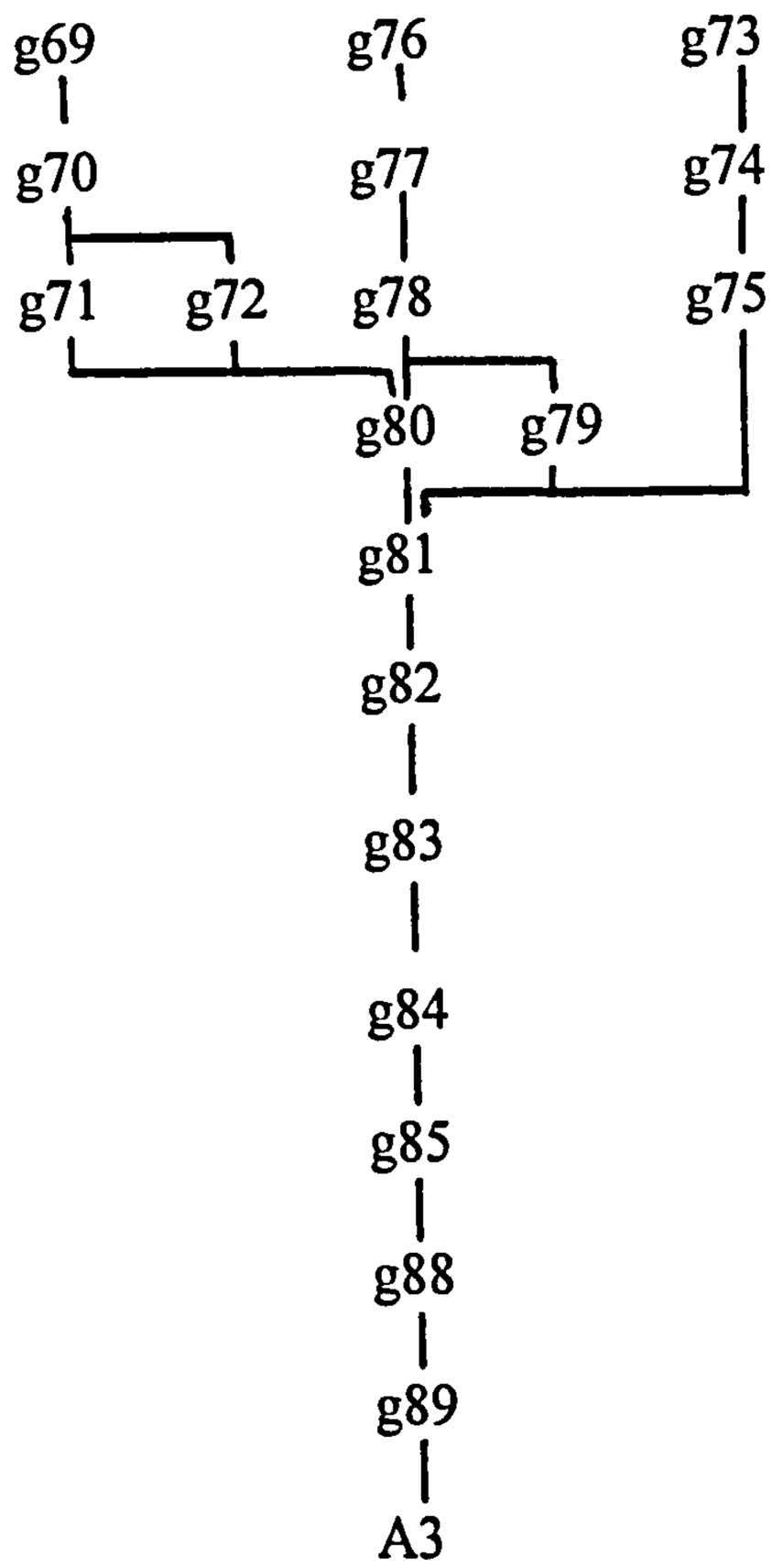

This deposit series consists of an accumulation of stratigraphically isolated deposits in the north-eastern corner of the excavation area, beneath Stolpe's excavations.

The structural elements in this group are extremely difficult to analyse, because of their isolation. It is likely that g71, g76, g79, g264 and g295 derive from a gable wall oriented NE-SW at right angles to the northern lane, but some of the groups may relate to later phases which were truncated by Stolpe's excavations.

AREA: E

PERIOD: B4

A39. 49 redeposited ash
64 redeposited ash
65 domestic and industrial rubbish
66 redeposited ash

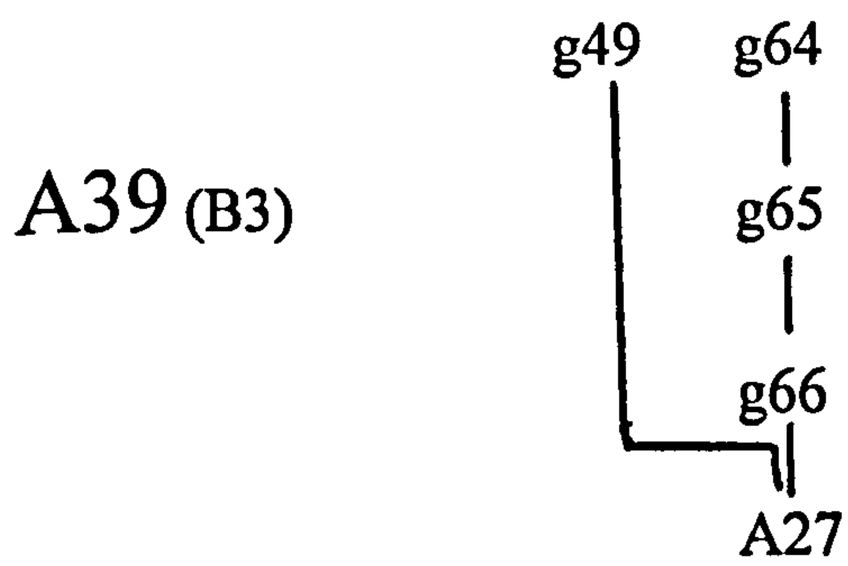

This deposit series consists of stratigraphically isolated peaks of archaeology in the eastern part of the northern plot, all the groups consisting largely of industrial and domestic rubbish. The laminated nature of the deposits, and their position on the plot both suggest that the groups were laid down within a building, probably a workshop. The A-unit is phased to Period B3 on the basis of the moulds contained in the contexts.

AREA: E

PERIOD: B3

A40. 1 small pit - possibly a post hole
2 domestic rubbish spreads
3 burnt turf,redeposited as rubbish
4 domestic rubbish deposits
5 probable post hole
6 domestic rubbish
7 small pit or post hole
8 domestic rubbish spreads
9 domestic rubbish
10 domestic rubbish
11 domestic and industrial rubbish
12 post hole with no stone packing
13 industrial rubbish

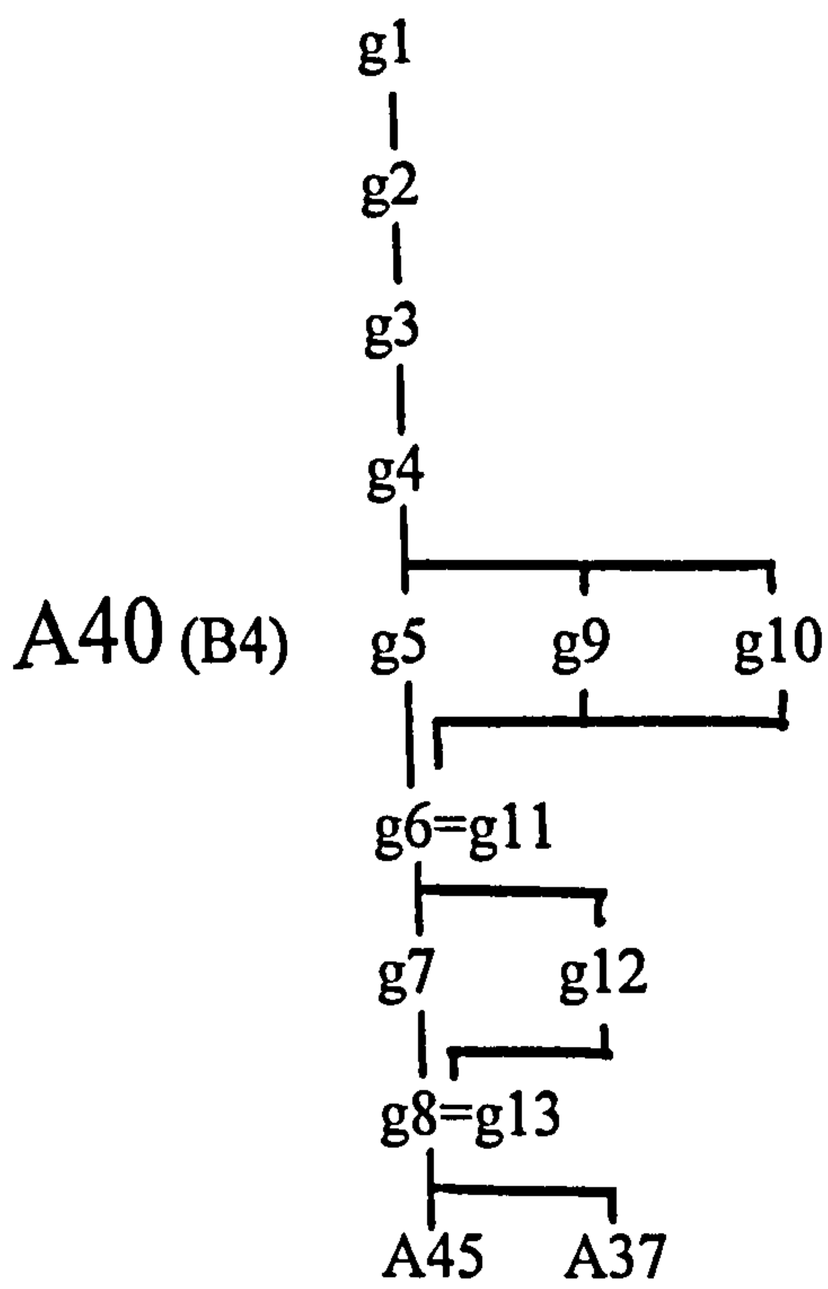

This deposit series consists of domestic and industrial rubbish layers in the northern lane, post-dating building A37, but contemporary with fragmentary building A25.

Post holes in the centre of the lane (g12 & g7) suggest the possibility that at some point during this deposit series, the lane was resurfaced. The evidence is, however, very slight.

Although the finds from this deposit series contain metal working debris, the amounts are less than those in underlying levels. This is undoubtedly partly because of the very fragmentary nature of A40, but may well also reflect some decline in production in the later levels of phase B4.
AREA: E PERIOD: B4

A41. 920 fragmentary burnt structural remains in the southern building
921 domestic rubbish in the southern building
922 a burnt clay floor
923 domestic rubbish in the southern building
926 activity layers in the southern building
929 silty clay and sand floor layers

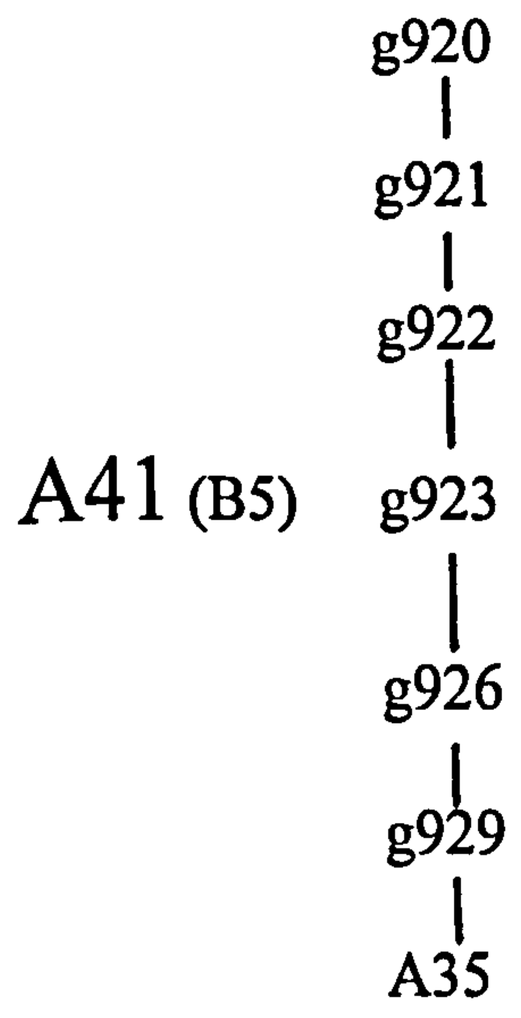

These deposits form the latest surviving workshop remains in the southern building. There is no hearth, but a floor level, g929 is followed by a sequence of use deposits (g926 & g923) before a renovation of the floor (g922), its use and destruction.

It is possible that this may have been two buildings, but the difficulty of interpreting such damaged deposits, and the impossibility of distinguishing a renovation from a reconstruction without the remains of the hearth, have led to their being grouped as one structural sequence. There is also 4no destruction deposit between the two floors g922 and g929, but the fire layer g920 appears to extend over both.

AREA: E

PERIOD: B5

A42. 59 boundary features in Stolpe's long trench south of the main part of the site.

These features were visible in the subsoil beneath Stolpe's excavations in the southern continuation of the most westerly of the parallel trenches excavated across the site. They had no stratigraphic relationship with the archaeology of the rest of the site. The backfill of the trench was stripped by machine, and the features recorded by hand.

These features appeared to mark plot boundaries on the glacial clays and fluvial sands of the subsoil. They marked the position of plots apparently radiating from the waterfront, whose divisions were visible as persistent shifts in the archaeology of the site in the long section of the trench. The plot boundaries did not shift substantially from their initial locations during the occupation of the settlement.

AREA: S

PERIOD: B1

A43. 849 rubbish layers in the southern lane.

A43 (B5)

A99
|
g849
|
A95

This group was impossible, stratigraphically, to fit into another A-unit, and has therefore been assigned its own. The deposits excavated in g849 were the result of the occupation of the adjacent plots to north and south during the whole of period B5. The northern edge of the deposit series respected the southern boundary of the northern plot, and it is therefore unlikely that its deposition extended into B6, the period of the lower use of the northern plot, when rubbish deposits from both lanes spread into the plot without hindrance.

In s2519 and s3354, however, large numbers of vessel glass sherds indicate the possibility that the uppermost contexts of this deposit series derive at least partially from the use of oven A51 (B6). Unfortunately, the lack of a clear stratigraphic relationship between the two makes this a hypothetical rather than a proven link (see A51)

AREA: N

PERIOD: B5

A44. 429 domestic rubbish in the southern lane
843 domestic rubbish in the southern lane

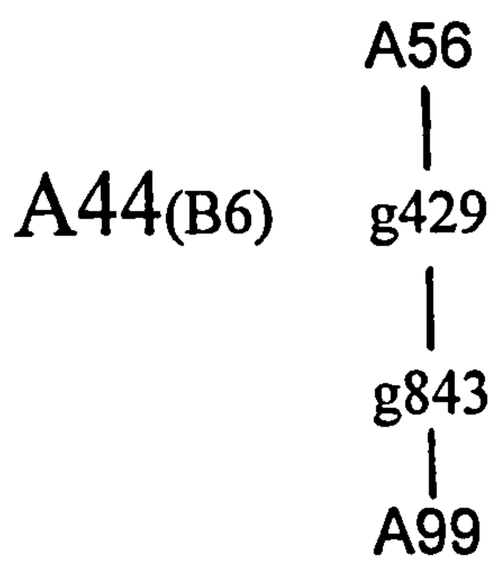

These deposits accumulated during the period of relatively low use of the northern plot, and are probably contemporary with buildings A49/55 on the southern plot.

There were few metal-working finds from these contexts, and a lack of vessel glass sherds relating to the use of A51 on the southern plot. This confirms the evidence from the northern plot that metal casting was abandoned during B6, but raises the question of whether the oven A51 continued to be used during the whole occupation of A49/51 for glass working, or whether, indeed, the evidence for glass working derived from the unexcavated deposits of period B5 on the southern plot.

AREA: N

PERIOD: B6

A45. 14 domestic rubbish spreads in the northern lane
15 domestic and industrial rubbish deposits in the northern lane
16 use and occupation layers at the entrance to the northern building
18 metal working debris in the northern lane
19 metal working debris in the northern lane
21 rubbish in the northern lane, primarily domestic
22 redeposited ash, burnt stone and clay, levelling
23 ash and charcoal, clearance from hearth

A45 (B4)

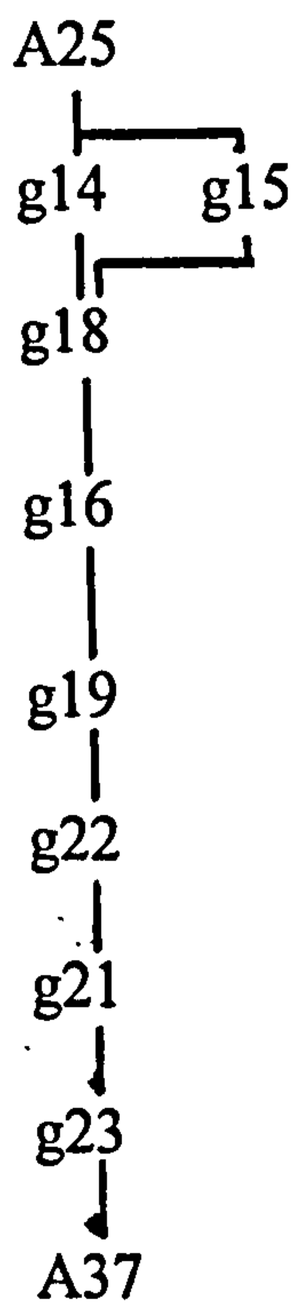

These rubbish layers in the northern lane derive from the use of building A37, on the northern part of the plot. They pre-date the use of building A25.

Finds from these groups provided evidence for contemporary metalworking activities on the northern plot.

AREA: E

PERIOD: B4

A49. 435 charred sill beam (round or half-round) of fir, and large, stone-packed post hole in a gable line
438 hearth, burnt stones in a burnt clay foundation
439 two burnt sill beams, with their foundation stones
574 fragments of charred planking in and over red burnt sand
660 two stake holes
663 one stake hole
664 stake and post holes forming a fire screen
665 stake holes forming a fire screen

A49 (B6)

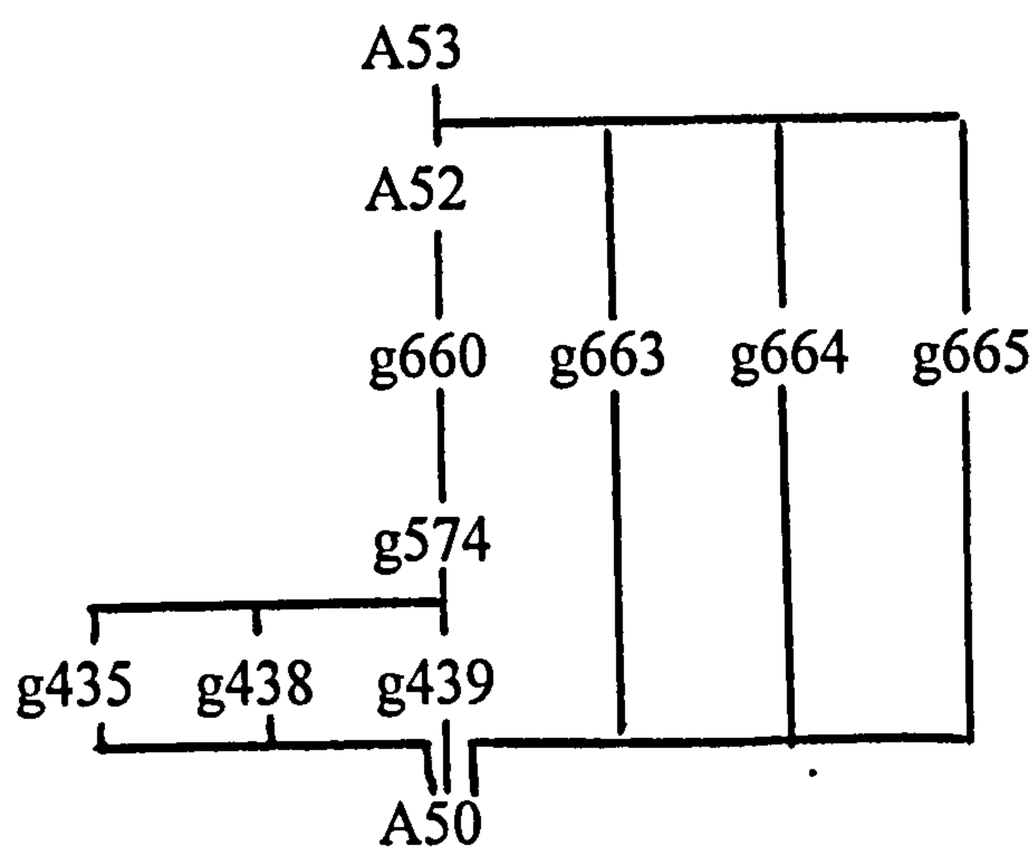

These groups form the structural remains of the earliest of the completely excavated buildings on the southern plot.

g435 consists of a substantial, stone-packed post hole, for a load-bearing post of 0.4m dia, and an associated charred sole-plate or sill beam of fir, on the corner and gable line of a building. The position of the apparent sole plate, slightly inside the projected line of the gable and parallel with it, suggests that it might, however, relate to an internal construction, such as a wall bench. In addition, during excavation the stratigraphic position of this beam was ambiguous, and it is possible that it may relate to an earlier structure.

Immediately to the east of this lies a corner hearth, g438, of typical clay and stone construction (see group description for further detail), Groups 663, 664 and 665 form fire screens and associated structures around the hearth. A long wall, g439, represented by a fragmentary charred sole-plate and associated sill stones lies to the south of the hearth. g439 also contains a sole-plate and sill stones (s3316), parallel with g435 and at right angles to the long wall, which probably represent an internal cross

wall in a rectangular building. This beam, although also fragmentary, stretches five metres from a pad stone at the south-western end, in the southern wall line, to a similar stone at the north-eastern end, and thus gives the NE - SW dimension of the whole of the building.

A wall bench is suggested by the presence of a charred sill beam (s3401 g439) parallel with the long wall. s3401 formed a right angle with s3439, joined by a spread of large pieces of charcoal. s3439, which is parallel with g435, indicates that the wall bench extended round at least two sides of the room.

It should be noted that it is undoubtedly possible to interpret this as a square building, ca 5m x 5m, with s3316 being an external wall. The stratigraphic connections between this and A55 (see below), which may form the eastern end of a 10 x 5m building with A49, are tenuous, though they undoubtedly date to the same phase. The narrow, NE - SW gap between the south-eastern end of A49 and the north-western end of A55 appears to have functioned as a passage, and the deposits in this area are truncated and worn away. The two have therefore been treated separately, despite the probability they are one building. See A55 for further discussion.

This building was destroyed by fire. Slight depressions in the ground along the projected wall lines, associated with overlying disturbances in the fire layers A54 and A53, suggest that re-useable timber may have dug out during the process of levelling the site following the fire. This would explain the relatively fragmentary nature of the remains of this building in comparison to the overlying burnt house, A56.

AREA: S

PERIOD: B6

A50. 440 compacted brown silty deposits full of relatively undamaged domestic rubbish, particularly animal bone
443 ash and stones from the levelling of oven g441/442
452 burnt deposits, relating to underlying, unexcavated structure

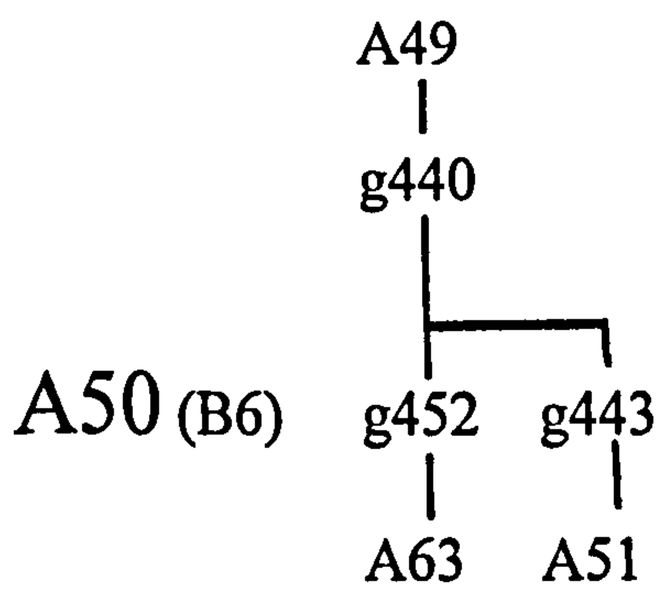

These groups form the construction levels for A49 and A55. Groups 443 and 452 contain material deriving from the levelling of underlying structures, in the case of g443, an oven g441/2, which was excavated as A51 (see below), and in the case of g452, a virtually unexcavated structure, probably another building (the few elements of this building which were excavated are recorded below as A63).

G440, on the other hand, contained large amounts of domestic rubbish, particularly animal bone (concentrated in certain areas), with coprolites, iron objects and pottery. There was a certain degree of fragmentation in the finds, but the large size and intactness of many of the bones, combined with a low degree of lamination in the deposits, suggests that the layers built up rapidly, in an area with little traffic, and may represent either conscious levelling of the plot with redeposited material before the construction of A49/55, or a very short period when the site lay empty and was used for rubbish disposal by neighbouring plots.

A noticeably large number of glass beads, cullet and sherds of vessel glass were found in groups 440 and 443, particularly concentrated in g443. The amount was not comparable to, for example, the amounts found in the glass bead maker's workshop in Ribe (Jensen 1991), and the concentration, though high relative to the other deposits here at Birka, is not sufficient to suggest large scale glass bead production (for further discussion see 'oven' A51, below).

A50 extended over the whole area of A49/55, with the exception of the south-eastern end of the structure(s), and did not cover the surface of A51, overlapping only the edge of its destruction deposits (g443), which therefore have an ambiguous and slightly uncertain stratigraphic to this A-unit (see below, A51)

AREA: S

PERIOD: B6

A51. 441 drystone sunken oven
669 stake holes in oven construction
442 ash layers in and around g441, representing its use

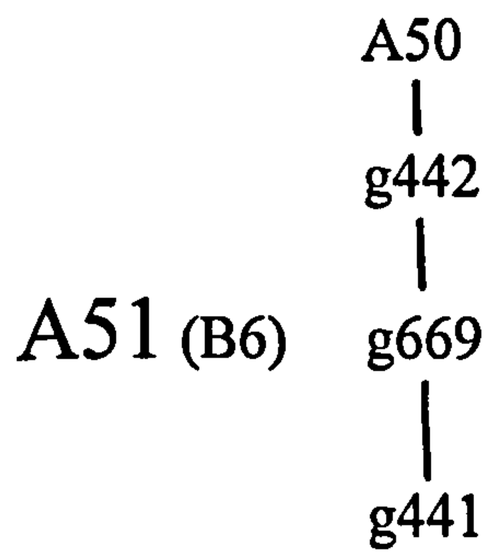

A51 is the well-preserved remains of an oven, whose construction in detail is discussed in the description of g441. Group 441, together with g442, represents the construction and use of the structure, which is treated as a separate unit at this level because of the lack of close stratigraphic relationships to any surrounding structures.

The finds in g441 reflect the domestic nature of the site, including scraps of metal, two glass beads (F83708 & 84115), and a spindle whorl (F79846); there is no unexpected predominance of any one type of find. This is in contrast to g442, which contained a number of fragments of vessel glass and cullet (F77016, 77017, 77677, 77004 &c.), and four whetstones (F73816, 73817, 76882, 76883).

The function of A51 is problematic. A relatively large number of vessel glass fragments and glass beads were found in the use (g442) and destruction (g443, A50) of the structure but the types of beads found were not those which are believed to have been produced at Birka (Kjellén pers. comm.). Recycling of glass in some form is possible, but the scale of this production must have been very small and far from industrial, as the absolute amounts of glass are very small. The associated deposits also produced large amounts of typically domestic type finds, including loom weights, comb fragments, bone and pottery, suggesting a continuing domestic use of the area, and possibly a primarily domestic function for the oven or furnace itself. As noted above, a large number of vessel glass sherds were also found in A43, and it could be that they derive from a use of the plot prior to the construction of A51.

A51 was undoubtedly constructed prior to building A55, and

possibly related to a building lying under A50 (the construction levels for A49 and A55), part of which was excavated as A63 (see below). Despite this, it is probable that A51 continued in use into the lifetime of house A49/55, fitting into the eastern corner of A55. The destruction spreads from A51 (g443) have been included in A50, but could possibly instead be assigned to A54 (the destruction of A49/55).

The ambiguity of the stratigraphic relationships in this particular part of the site caused interpretive problems throughout 1995, and have their roots partially in the fact that the eastern gable corner of the overlying buildings A56 and A58 (see below) lay just in this area.

AREA: S

PERIOD: B6

A52. 432 reconstruction of hearth g438, during the use of building A49.
434 charcoal, ash and red burnt sandy silt - fire affected deposits under floor g445.
437 ash layer in hearth g438, and related use layers on the surrounding floor.
445 charcoal, red burnt sandy silt, charred wood and planks.

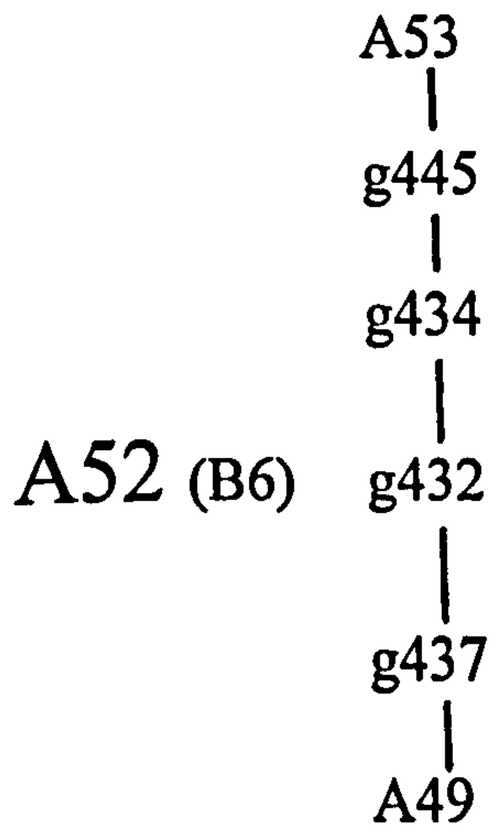

A52 is the use of A49. It consists of the deposits relating to the use of the primary hearth in A49, including an undisturbed ash layer lying over that hearth, and laminated, charcoal rich silty layers spread over the surrounding floor. A secondary reconstruction of the hearth, g432, is associated with a secondarily charred wooden floor (g445) and the deposits lying under it (g434).

The finds from g437 seem to indicate a purely domestic character for the occupation of this building, consisting as they do of a couple of glass beads (F83635, 83718), a weight (F77296), small fragments of metal including a nail, pieces of loom weight and a fragment of a stone gaming piece (80776). The spreads on the floor of the building also respect the line of a wall bench to the south-west (see description of A49 for further details), which evidently continues in use.

The reconstruction of the corner hearth, g432, is described in more detail in the relevant group description. The position of a post-hole (s3389) immediately to the east of the hearth, and associated with its construction suggests the presence of a smoke hood, which may indicate a smoke hole in the gable end of the roof, directly above.

Finds from g432 consist primarily of burnt clay from the structure of the hearth, with a fragment of slag, possibly itself vitrified clay, a nail, and another glass bead. Nothing contradicts the preliminary interpretation of the building as having a primarily domestic use.

Group 445 is the charred remains of a wooden floor. This appears to be a secondary construction, lying as it does over deposits which can be stratigraphically related to the use of the two hearths, g432 and g438. It is entirely possible, however, that the deposits lying under the floor (g434 and g437) consisted of material which filtered through the floor during its use, and therefore post-date the floor, although they lie stratigraphically under it. If this is the case, g445 could equally well be moved to A49.

AREA: S

PERIOD: B6

A53. 436 orange burnt sandy silt, ash and charcoal
444 burnt daub, charcoal and soot
450 charcoal and undisturbed ash

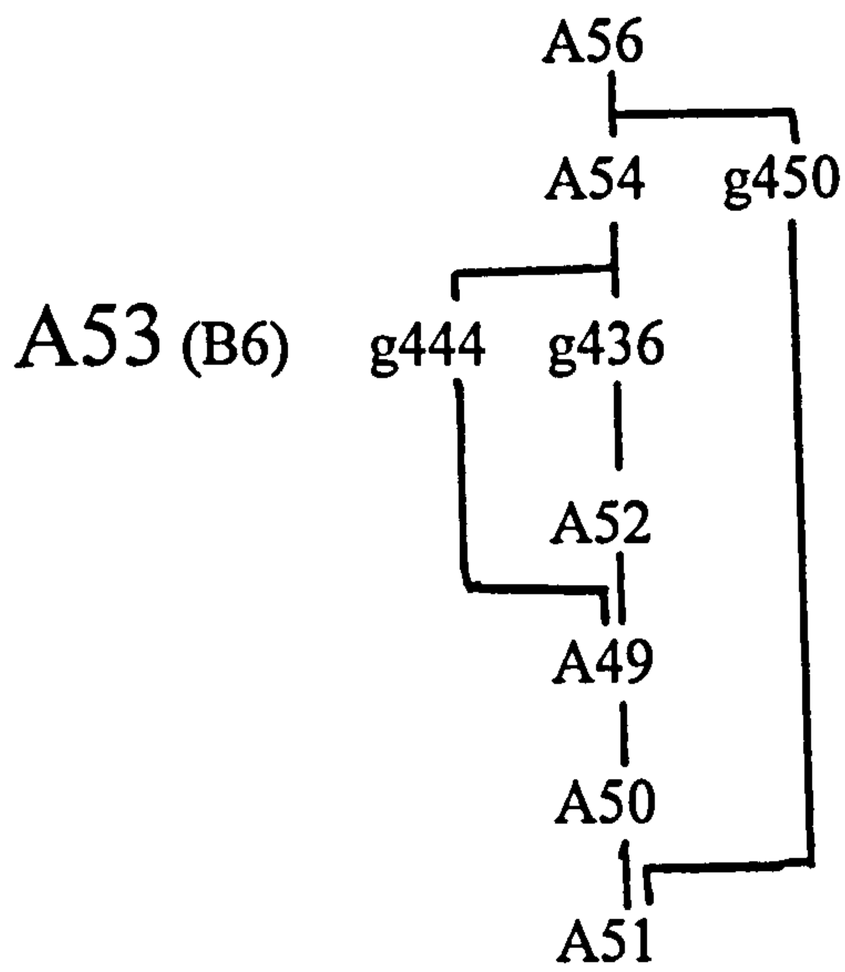

This A-unit relates to the destruction by fire of A49 and A55. The deposits included here show little or no sign of disturbance and reflect the underlying structure of the building(s). g444, for example, includes large amounts of burnt daub, and large pieces of charcoal, which derive from the north-western gable wall of A49.

g436, which lies over A55 and A51, contains relatively large amounts of vessel glass and some glass beads, including two (fnr:84269) which have melted together as a result of post-production heat, probably the fire which destroyed A55. This glass debris lies in the same area as the concentration noted in the underlying A-units A50 and A51

It may be possible that g436 could, in fact, be a part of an earth floor within A55, strongly affected by the fire which destroyed the building. The amount of ash in the deposit, however, suggests that the most likely interpretation is of a primary fire layer, which in all probability contains much material from the underlying surface.

There are no direct stratigraphic relationships between the groups in this A-unit, but they all lie under the levelling of the plot following the destruction of A49/A55, and over the building(s), and the similarity of their interpretation, as primary fire layers, justifies their inclusion in the same A-unit.

AREA: S

PERIOD: B6

A54. 404 red brown burnt clayey sand - burnt turf roof?
409 very mixed deposits of domestic rubbish and burnt material - ash, charcoal and traces of unburnt wood
411 localised ash deposits
414 charcoal rich layer with slight admixture of animal bone
431 redeposited ash, charcoal and domestic rubbish spreads
433 spread of burnt stones dragged up from underlying hearth g432, during levelling
447 grey brown redeposited ashy silts, with large amounts of stone
448 laminated charcoal, ash, grey-brown silt, with stones
451 homogeneous brown sandy silt, large stones

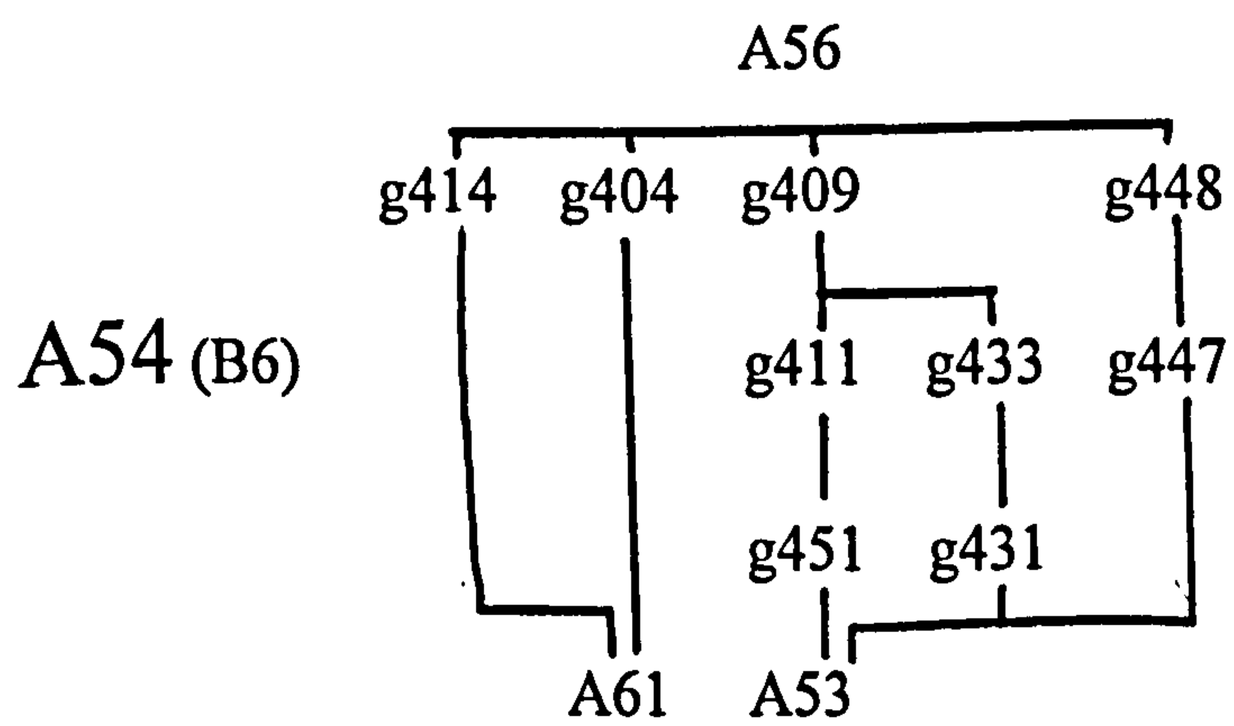

A-unit 54 consists of all the disturbed and levelled fire layers which form the surface upon which the later structure A56 is built. Disturbances in this surface are concentrated particularly on the lines of the underlying wooden structures of A49 and A55, suggesting an attempt to retrieve such useable timber as survived after the fire. This is confirmed by the presence of slight depressions along the line of walls in A49, where neither charred wood nor traces of organic wood survive (see above).

Despite these rather amorphous later disturbances, and the attempts at levelling the plot which are indicated by the redeposition of stones from underlying constructions in groups 447, 448 and 451, the distribution of the groups in A54 reflects the structure of the underlying buildings A49, A55 and A61.
g409 confirms the presence of an internal division parallel to the southern wall of A49, probably a wall bench, and suggests a similar structure along the gable wall of the building. g431 follows the line of either an internal cross

wall in building A49/A55, or the western external wall of building A49. g448 contains the stones redeposited from the levelling of the eastern gable wall of A55, and follows the line of that wall.

Although g404 has no immediate stratigraphic rel. with the rest of A54, its description, extent and nature, as a disturbed fire layer, reflecting the extent of the underlying structure (A61), and its position immediately under the best preserved of the buildings in this area (A56), suggest that it belongs to the same destructive episode as the remainder of A54.

AREA: S

PERIOD: B6

A55. 446 charred planks, running both NE-SW and SW-NE
449 cut and stone packing for post, shattered stones
573 double post hole, and associated post 0.5m away
661 stake hole
662 four stake holes in diffuse line
670 fragments of charred plank

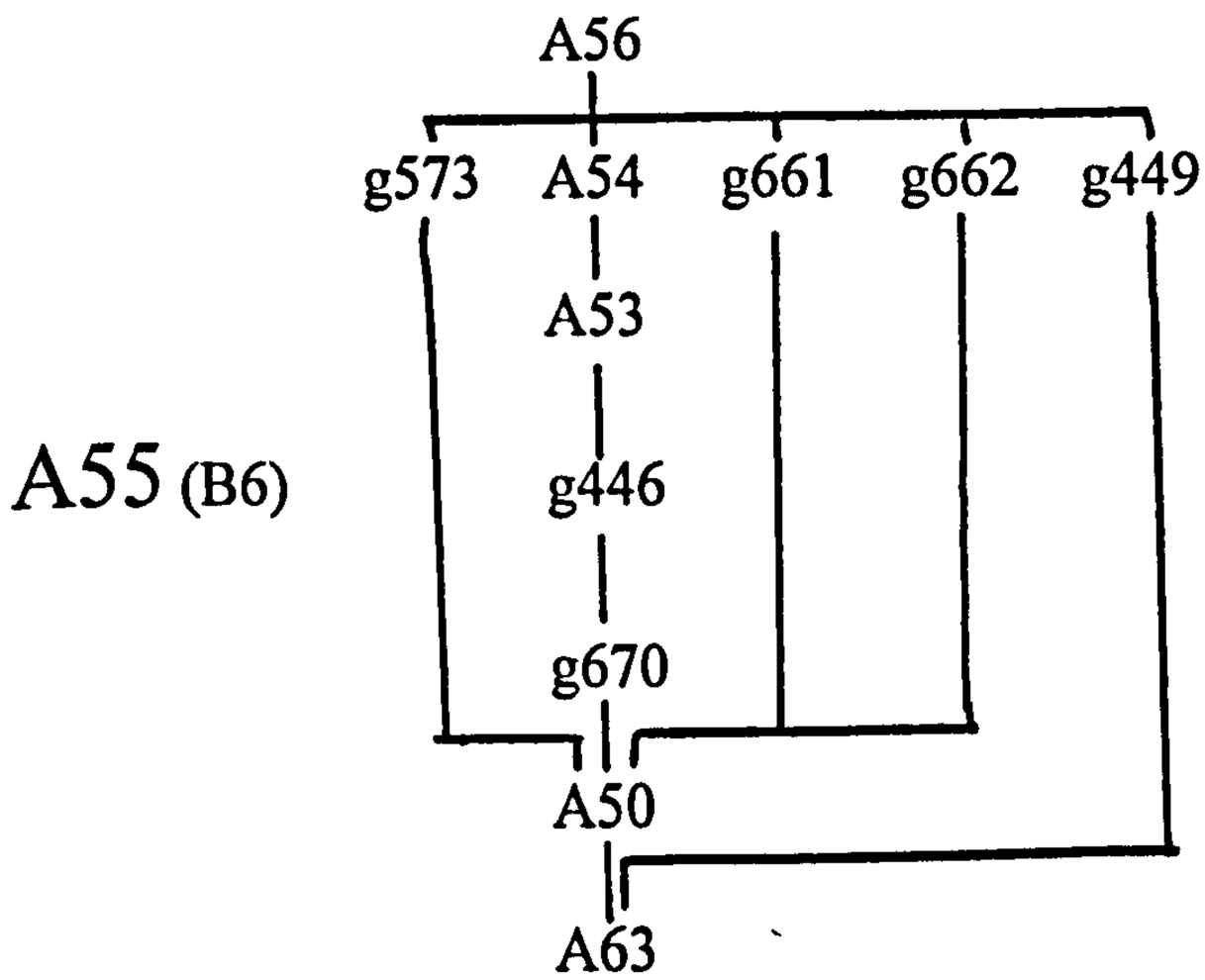

These groups form the fragmentary remains of two wall lines at right angles, and an associated wall bench. The stratigraphic point of construction is identified by the charred remains of the wall bench, g446 and g670, which lie under the associated fire layer A53, and are thus probably contemporary with A49. The diffuse line of stake holes consisting of g661 and g662 marks the northern edge of this wall bench, whose southern edge, against the southern wall of the building, is marked by the cessation of the charred wood, and the edge of the overlying fire deposits (see A53, A54).

The southern wall of the building has left no visible remains, suggesting a sill beam construction from which the reusable timber was removed after the fire, or which was not badly charred and hence rotted away.

The fact that no post-pipe can be seen in g449 suggests that the post was dragged up, with associated disturbance to the fill of the hole, and explains the stratigraphic position of this above the fire layer A54. The topographical location of g449 clearly indicates its association with g446/g670 and its size suggests that it was a load-bearing post.

The double post hole in g573 lies on the edge of the overlying g436 (in A53), and seems to form a part of a wall

line running NE-SW at right angles to the wall bench and its associated wall.
The remains of this structure are particularly slight, and the area between g573, and the parallel wall line in A49 (g439) was much disturbed by later levelling and retrieval of reusable wood (see also A49, A53, A54). As a result, it is difficult to determine whether A55 should be interpreted as the eastern room of a two-room building orientated NW-SE, possibly with a central cross passage running NE-SE (the other room being A49), or whether, instead, this represents a separate small square building of approximately 5 x 5m. Because of this ambiguity, the two structures are treated separately.

It should also be noted that it is entirely possible that A51, the oven/furnace which was built in this area prior to the construction of A55, continued in use during the lifetime of this building. The area where an south-eastern wall to A55 might be expected to occur is largely removed by the edge of Stolpe's excavations.

AREA: S

PERIOD: B6

A56. 390 ten stake holes in a straight line NW-SE
392 beams for floor, and associated fragments of charred planking
394 hearth
395 sandy silts, containing domestic rubbish and affected by fire
397 eight stake holes in a right-angle line
401 hearth
403 wooden lining in ditch
405 hearth
406 nine stake holes in a diffuse line NE-SW
408 domestic rubbish and redeposited burnt material used to level ground for building and provide foundation
410 3 load bearing long axial post holes
412 in situ ash containing charred structural wood - floor
427 ditch NW-SE, and associated fills
430 post and stake holes, with a horizontal plank around hearth g394
571 ditch NW-SE and associated fills

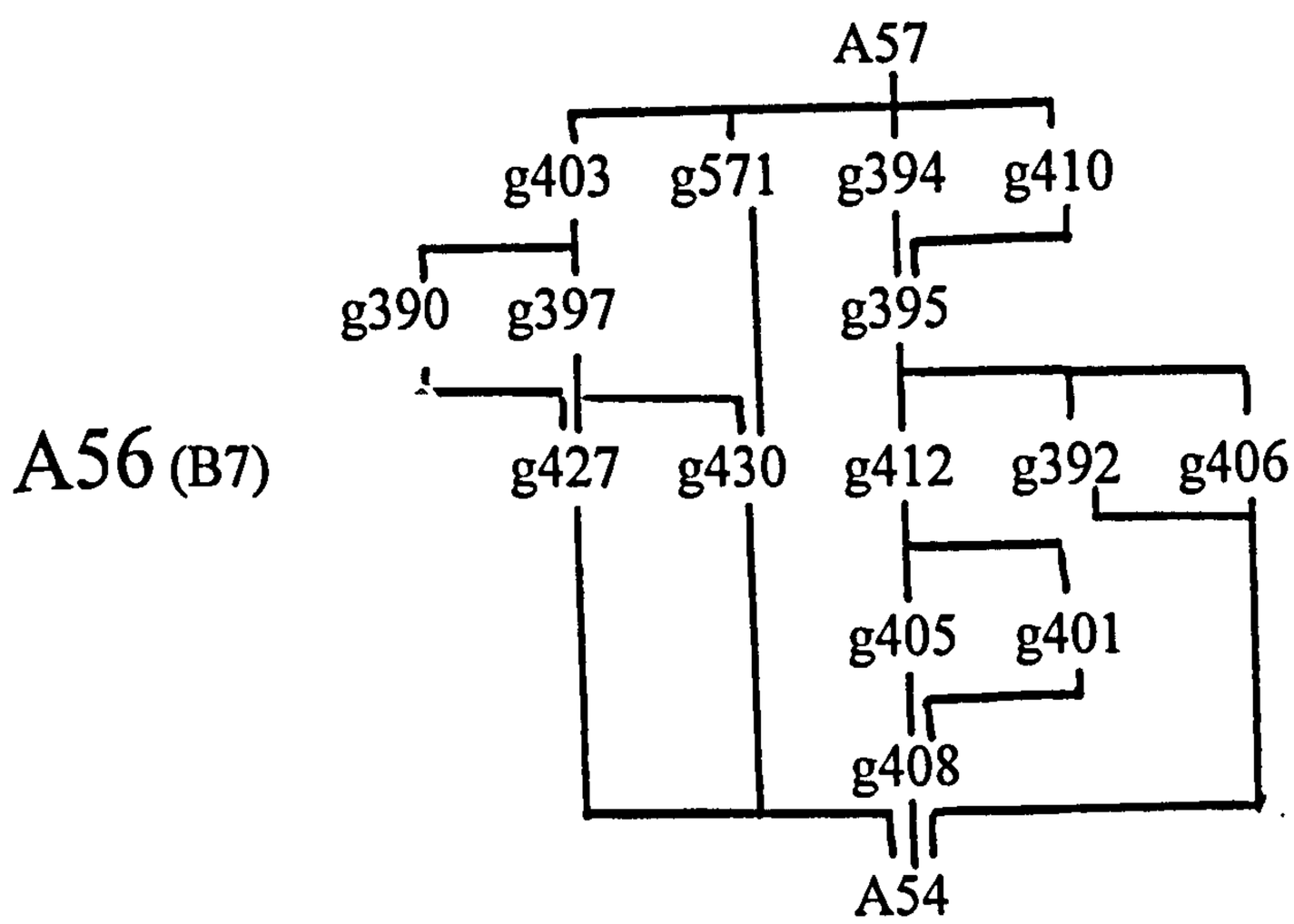

This complex association of groups forms the remains of the best preserved of the buildings on this plot. The whole is built upon redeposited and levelled spreads of domestic rubbish and burnt material from the underlying houses, g408, but g408 is so clearly limited to the extent of the building A56, that it must be seen as a conscious foundation deposit whose deposition dates to the construction of the building.

Groups 390 and 397 form the northern long wall of the building, with a right angle turn in g397 indicating the

northern end of an internal cross wall. The slight construction of this wall, and the lack of a load-bearing post at the junction of the cross and long walls is interesting, and confirms the suggestion that the important load bearing elements in the building were the long axial row of posts, g410. Ambiguity has arisen as to the stratigraphic position of g410, which could possibly belong to an earlier phase, but its alignment, in association with other elements of the building, fits best at this phase, where it creates a two-aisled building.

Wooden floors in both of the two rooms of the building are indicated by g412 in the western and g395 and g392 in the eastern room (see plan), although the charred remains of planking were very fragmentary. The floor in the eastern of the two rooms rested on sills. Both floors were removed together with the deposits immediately around them, which could not be separated; in both cases, the floors seem only to have extended over the southern side of the room.

The building contained three hearths, g394, in the eastern room, being of typical oval form, and with associated structures represented by g430. These structures may possibly have included a smoke hood supported on the post in post-hole s1529, but this is more likely to be a support for a pot hook, or for the probable fire screen consisting of stake holes s1623-5 and s1560. This hearth lay slightly to the south of the long axis of the building, although there do not appear to have been load-bearing posts in this room.

There were other two hearths in the building, both in the western room. g405 lay in the extreme south-western corner of the building, and probably had a smoke hood, judging by the presence of an associated post-hole in s1649. The other hearth (g401) was more central to the room, and showed no evidence of associated structures. Both hearths lay to the south of g410, which marked the long axis of the building.

The door between the two rooms was probably in the northern aisle of the building, avoiding the hearths, with the external door in either the northern half of the eastern gable end, or the north-western end of the northern long wall. It is, however, worth considering the possibility that the northern aisle in both rooms may have been occupied by a wall bench.

A stone packing of sill stones at the western gable end formed a sill for the gable wall. Ditches g427 and g571 were excavated parallel to the eastern halves of two long walls, probably to improve drainage. Interestingly, the fill of both these ditches, but particularly the northern, g427,

contained large amounts of burnt daub, with plank impressions, suggesting that despite the wattle indicated by g390, a part of the walls could have been of either horizontal planking or vertical staving. It is evident, however, from the physical relationships of g427, that it probably persisted in use during the occupation of the later house on this site, A58, and it is likely that the fills of the ditch derive from the destruction of that building, rather than A56 (see description of A58 for further discussion).

Finds from all these deposits indicate the domestic nature of the building. Fragments of metal, broken tools, loom weights, pottery and bone are among the commonest. A number of combs, and pieces of comb-making debris in A56 and its destruction deposits (A57) suggest the presence of a comb maker for a short time. There are also weapons, including a scabbard chape, from this building, and this building alone, which suggest that the occupants were of relatively high status.

AREA: S

PERIOD: B7

A57. 393 burnt orange sandy silt and laminated charcoal - burnt roof
398 burnt clay, ash, burnt orange sandy silt, disturbed
399 ash, disturbed, with sandy silt, charcoal, domestic rubbish
400 ash and charcoal spreads and lenses in sandy silt
402 burnt orange sandy silt, laminated with charcoal - burnt roof
417 domestic rubbish spreads, with fired clay, charcoal and ash.
420 description lacking but from position, probably fire layer
426 grey brown ashy silt fills in ditch and lane.

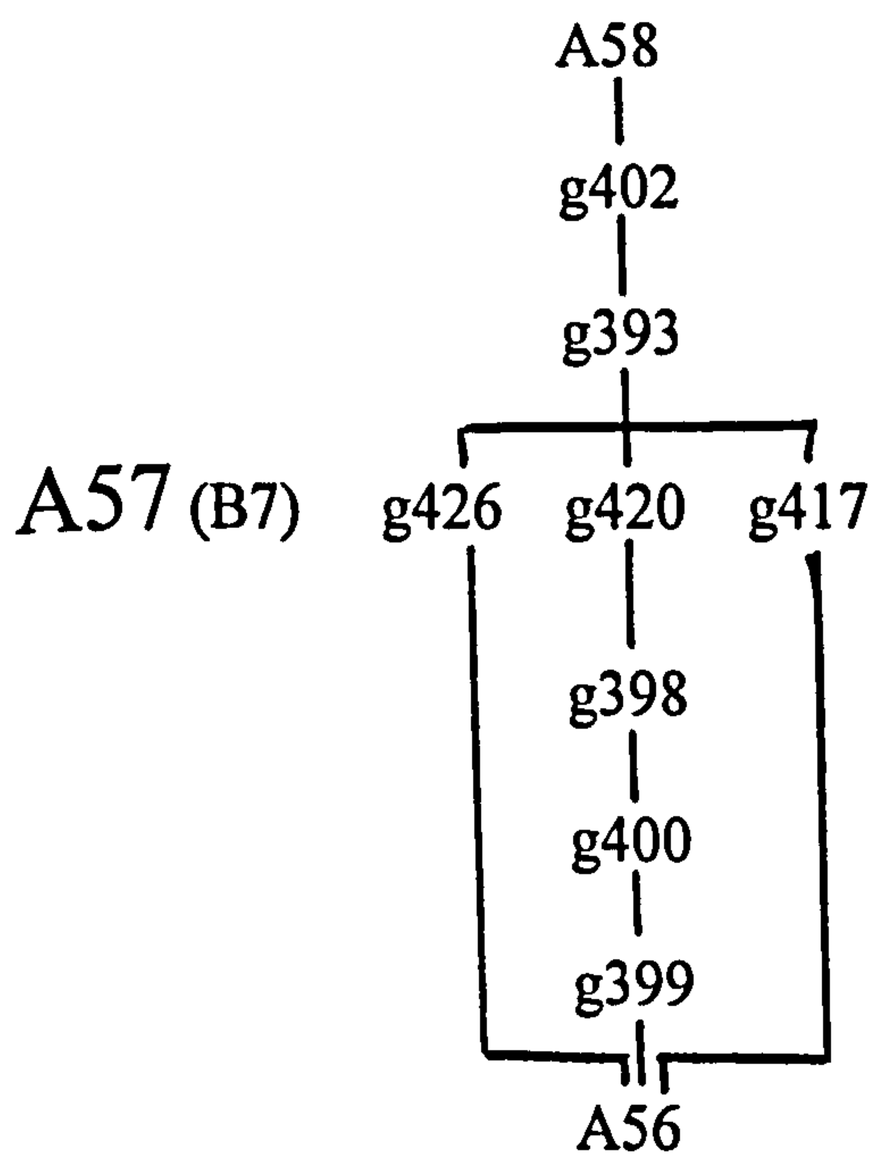

These deposits derive from the destruction by fire of house A56. The groups on the southern side of the building, g398, g399 and g400, all showed signs of post-depositional disturbances; they were not highly laminated, and included large amounts brown sandy silt and animal bone in some areas. This may represent the retrieval of timber from the building, or the effects of levelling the plot after the fire.

In contrast, groups 393 and 402 were laminated, and consisted of lenses of orange-red or red-brown silty sand or sandy silt, interspersed with charcoal. The spreads of orange sandy silts were limited to the area of the building, and are interpreted as representing the remains of a burnt turf roof, with the charcoal coming from the structural roof

timbers (see group descriptions for further discussion).

There was some doubt as to where g417 should best be placed, as it respected the wall lines of the underlying building A56, and was initially interpreted as an occupation layer within that building. However, given the contents of the deposit, charcoal, ash, burnt daub and bone, and its similarity to destruction deposits outside the building, such as g400, the likelihood seems to be that it belongs in the destruction, rather than the occupation of A56.

AREA: S

PERIOD: B7

A58. 382 two post-holes, plank and wood layer in northern wall line
386 three post-holes in southern wall line
388 clay over stone packing
396 oval hearth of stones set in clay
415 foundation trench for western short wall, with eaves drip
416 two post-holes in wall line

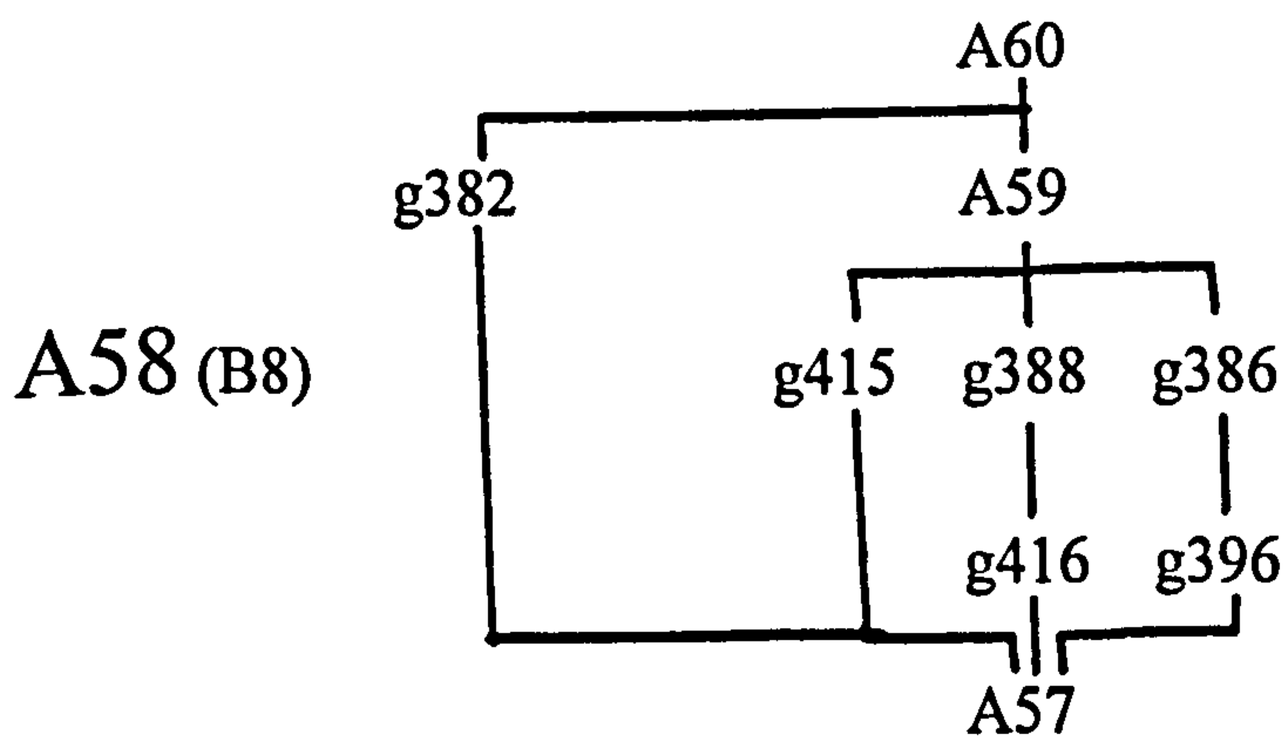

A58 is the latest of the relatively intact buildings excavated on the southern plot. Groups 382, 386 and 416 consisted of stone-filled post-holes, each ca. 0.5m in diameter, in the northern and southern long walls of the building, with a double post at the south-eastern corner of the building. In g382, which included the remains of the northern long wall, a layer of badly preserved wood, with a single identifiable horizontal plank, probably derived from the wall, which may therefore have been of '*skiftesverk*' i.e. short horizontal planks slotted between vertical posts. One post-hole remained of the eastern end wall, but the remainder was dug away by Stolpe's westernmost long trench. It is very clear, however, from the size and frequency of those post-holes which survived that all the walls were load-bearing.

From the physical relationship of g427 (the ditch north of, and parallel to the northern wall of A56) to the remains of A58, particularly the post holes, it is clear that there is a strong probability that the fills of g427 derive from this building. This implies that the northern long wall of A58 was paralleled by a well constructed, wood-lined ditch, which had marked the boundary of the plot against the lane to the north through the lifetime of two buildings. The fills of the ditch, which consist largely of burnt daub with clear impressions from rough planks, confirm the suggestion that the building was constructed with panels of horizontal planks between the load-bearing posts in the wall lines.

At the northern end of the eastern short wall, a stone packing covered in clay (g388) extended into the interior of the building. This may have been simply be a reinforced foundation for the end of this wall, but it is more likely that it was the remains of the entrance to the building, through the end wall.

The site of the western short wall was indicated by a foundation trench running north-east - south-west. In association with this, an eaves drip in the southern half of the wall line suggested that this wall was not a gable wall, but that the roof of the building was probably hipped.

The building had one central hearth, oval in form (g396).

AREA: S

PERIOD: B8

A59. 385 ash, charcoal, red sandy silt, burnt stones, disturbed
387 in situ charcoal, ash, red sandy silt, laminated
391 ash, charcoal, burnt stones, domestic rubbish, disturbed

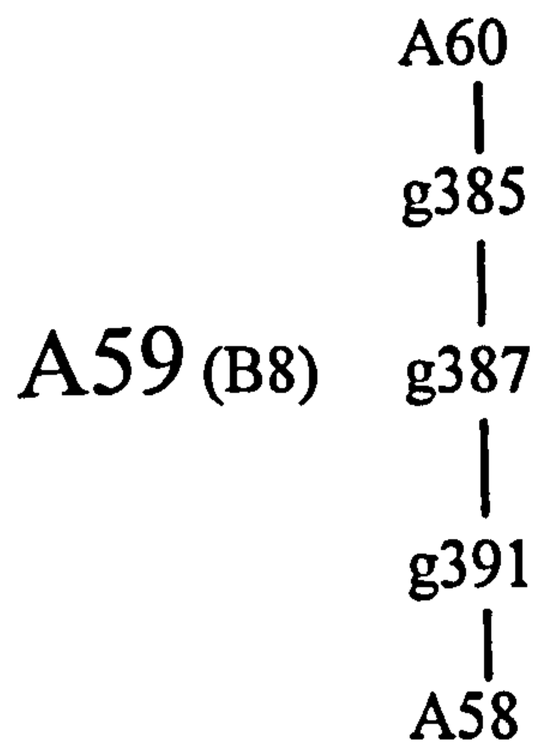

These groups make up the fire layers relating to the destruction of A58. Two of the groups show signs of disturbance, i.e. g385 and g391, which may relate to plough damage, to levelling of the structure following the fire, or, most probably, to a combination of both.

Group 387, which appears to be essentially undisturbed, is of the typical red-orange, find free sandy silt which is interpreted as representing the remains of a collapsed and burnt turf roof. In this case, this is therefore the roof of A58, redeposited by collapse but essentially in situ.

AREA: S

PERIOD: B8

A60. 380 hearth, plough damaged
381 plough damaged deposits
383 plough damaged deposits
384 fills of rubbish in a plough damaged ditch in the lane between the plots.
819 eaves drip along the southern edge of the lane.

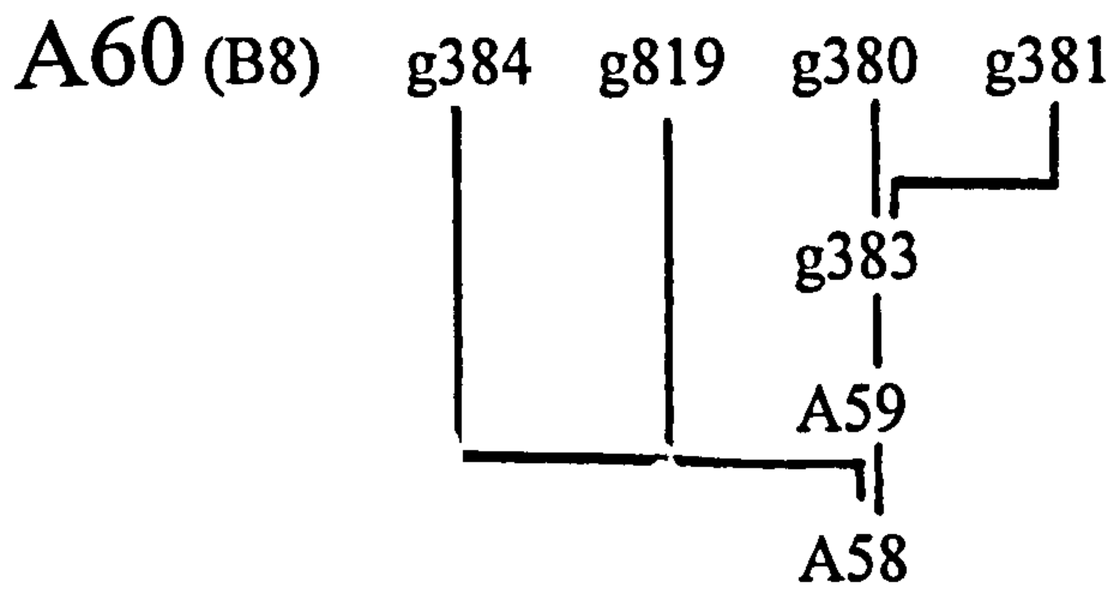

These deposits relate to a building lying immediately under the topsoil on the southern plot. The plough damage and consequent contamination of groups 383 and 381 is so extensive that they must really be treated as a part of the topsoil itself, although the stratigraphic relationship of g383 to the damaged hearth g380 indicates that g383 must originally have been a floor or occupation deposit within a building.

The hearth, g380, is similarly plough damaged. It lies immediately over the central hearth in A58 (g396), and could perhaps be seen as a renovation or reconstruction of that feature. This would suggest that the whole of A60 is a second phase of A58, which is not impossible. Every major reconstruction of the buildings on this plot has involved the relocation of the hearths, while A49 provides a precedent for reconstruction of a hearth during the use of a house.

AREA: S

PERIOD: B8

A61. 407 charred beams and associated charcoal deposits
413 sill stones surrounded by ashy rubbish layers
422 charred wood in associated, in situ, ash and charcoal
423 double post-hole filled with burnt daub
424 four posts in construction of a building
425 thin clayey silt deposit, affected by fire

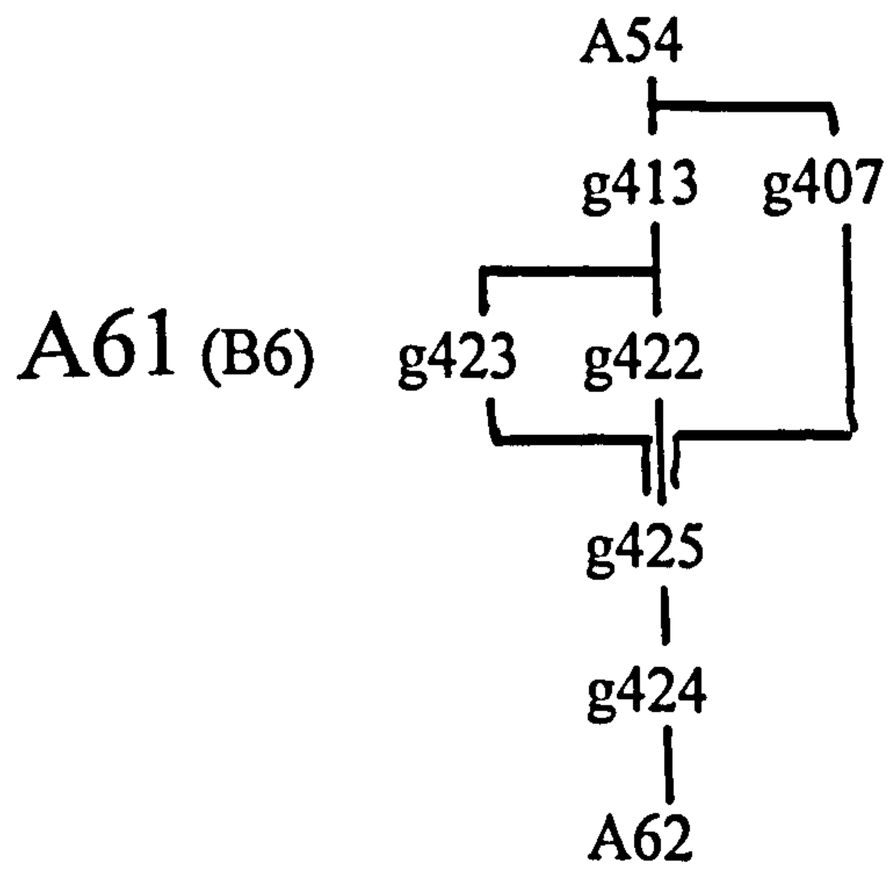

A61 consists of the structural elements relating to a building parallel with A49/A55, and similarly orientated north-west - south-east. It was apparently destroyed by the same fire, and the remains of its burnt turf roof are g404 in A54.

Group 422 indicates the extent of the building within the area of the trench, and the large amounts of charred structural timber within s1827 may possibly be the remains of a floor, or may derive from the inward collapse of the burnt walls of the building. s1823 is certainly the remains of an end wall (see group interpretation for further discussion). G413 is the sill stones for the same, western end wall. Groups 423 and 424 give the line of the northern long wall, while g407 may mark the eastern corner of the building, or may be a collapsed part of the northern wall (it lies in an area of subsidance), while the eastern end of the building lies outwith the area of the trench.

There was no hearth in the area of the trench.

The finds from g425, i.e. the area of the floor of the building, were apparently domestic in character. No special predominance of any one type of find was immediately noticeable, although there were naturally large amounts of burnt daub. AREA: S PERIOD: B6

A62. 418 redeposited ash layers
419 gravelly-sandy silt layers, fill topped by vegetation level
421 orange sandy silts, laminated with ash and charcoal

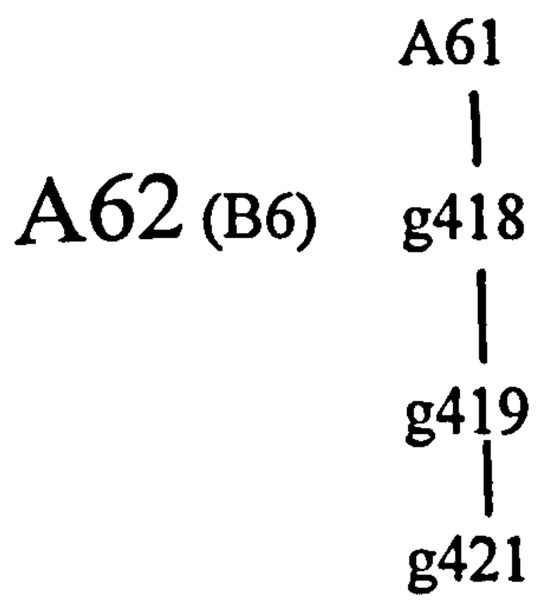

These deposits, which are limited in extent to an area of subsidence in the southernmost corner of the excavation area, represent deliberate fills and reinforcements of this area (g418 and g419). G419 is relatively finds poor, particularly on its upper surface, and may have been covered by vegetation, with a period of natural soil development to explain the paucity of small finds.

The fill and levelling deposits lie over a fire layer, g421, which is isolated by the subsidence from its associated structures, but probably relates to the destruction of a building otherwise unexcavated.

AREA: S

PERIOD: B6

A63. 453 four post holes and a sill beam slot
659 stake hole with preserved wood
667 stake hole
666 four stake holes within area of building
668 ash containing loose stones - from levelling of underlying structure

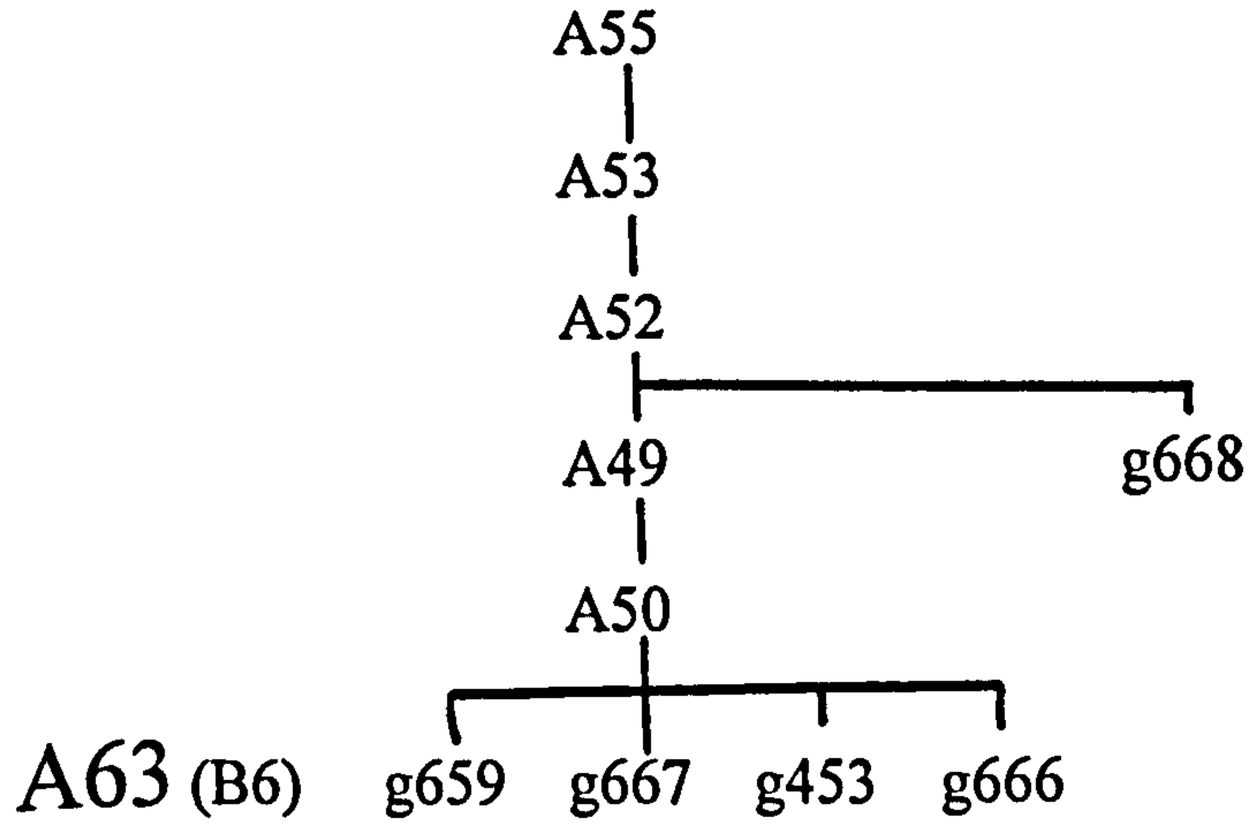

This A-unit consists of the structural details excavated below construction level A50, which relate to an underlying building, otherwise largely unexcavated. It is possible that the burnt deposit g421 which has been assigned to A62 may relate to the same structure, but its stratigraphic isolation and the possibility that it is redeposited make this difficult to assess.

Groups 453, 659, 666 and 667 consist of four post-holes, of which three were probably for load-bearing posts, judging by their size, and seven stake holes with similar stratigraphic positions, lying in the same area. A sill beam slot is also similarly placed, but the paucity of the evidence makes it difficult to interpret in terms of a building as a whole. G671, which lies separately from the remainder of the A-unit, is probably related, as it lies under A55, which is interpreted as contemporary with A49. It probably derives from the levelling of an underlying structure, such as a spread of sill stones, or paving.

The stratigraphic position of A63 raises the possibility that it is this building, rather than A49/A55, which is contemporary with the use of the furnace or oven A51.

AREA: S

PERIOD: B6

A64. 348 loose concentration of stones in the northern part of the plot
366 row of stones oriented NW - SE, on the northern part of the plot
367 loose concentration of stones south of g366
370 row of seven stones oriented NW - SE, on the northern part of the plot
375 diffuse stone packing along the northern edge of the plot
457 two large stone packings
618 post hole west of g457
871 row of stake holes oriented NE - SW
872 row of stake holes oriented NE - SW
876 stake holes on the north-western edge of g457
878 stake holes on the north-western edge of g457
879 stake holes on the north-eastern edge of g457

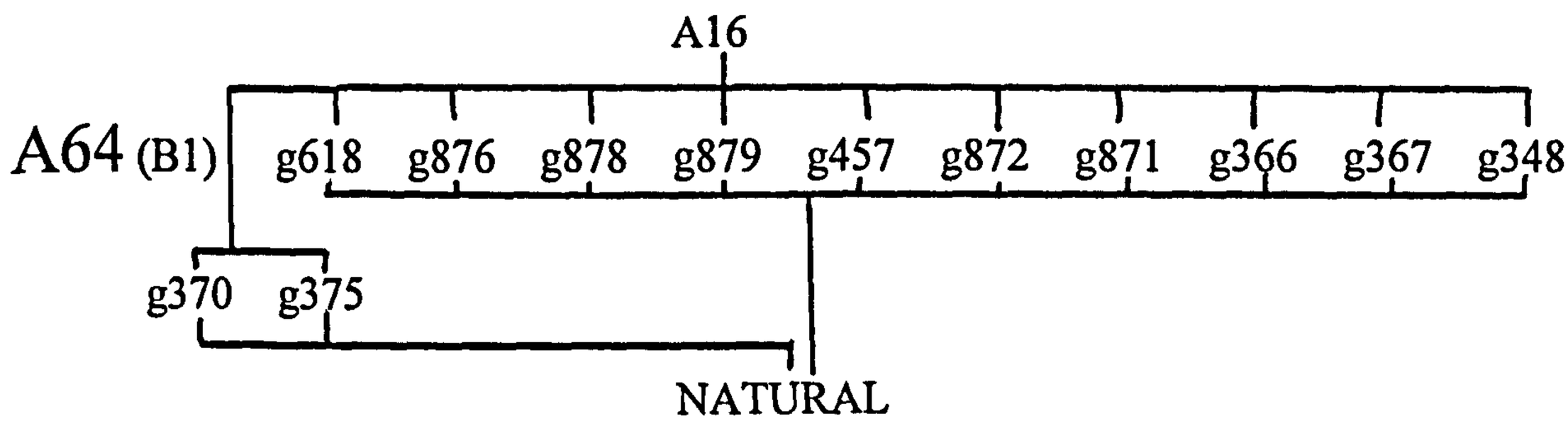

A construction consisting of two stone packings (g457), the northern 4 x 3m, the south-western 4 x 2m, bounded on their eastern side by a row of stake holes forming a wattle fence line (g872, g871), but spreading, at the northern edge, into the area of the plot (g348, g366, g367, g375). The south-western of the two stone packings (s4173 in g457) contained a carved stone of unusual type (see below *). Both stone packings were clearly bounded and well constructed on the shoreward side, with traces of a fence or sill line) which may have lain on this side in groups 628, 876, 878 and 879.

Redeposited clay layers which covered A64 (g460, g461) have been grouped with A16, as they appear to post-date the initial use of the structure.

These stone packings are comparable to structures excavated in London. At New Fresh Wharf, on the Thames in London, a similar rubble structure along the Saxon shoreline of the Thames was excavated (Miller, 1977:47-53) where it was interpreted as forming a reinforcement onto which boats could be drawn, in the manner of a modern hard standing.

The function of these structures is far from clear, but it is evident that they pre-date A10 (the fence line defining

the first occupied phase of the plot). Laminated flood layers lay over the shoreward stones of the construction, indicating that they lay precisely on the shore line when built, and this would confirm their dating to a time when the plot was periodically flooded, and therefore not occupied. Given this, it seems likely that the stone packings functioned either as the foundation for quays (and there is no evidence for a wooden superstructure over these packings, which have very irregular surfaces), or to limit access to the shore line, preventing boats being drawn up except at controlled points.

* A large fragment of a stone sculpture was discovered redeposited in s4173. The sculpture, which is of fine white stone, was semi-spherical, with a flattened base and a maximum diameter of ca 0.3m. Approximately one third of the stone was found. The form is reminiscent of a Late Iron Age grave marker, but differs in its figurative ornament. Two animals face away from each other on the stone, probably horses or wolves, while over these, the tail, wing and foot of a bird can be distinguished. The bird seems to be a bird of prey of the type found on the Vendel shields and on a purse fitting from Sutton Hoo. The only parallel to this sculpture from Birka is a white quartzite semisphere showing two horses which was found in 1940 in Uppsala, also in a secondary context.

Anna Bergman

Two additional fragments of this sculpture were later located among the finds. One was found in the flooded shore layers A5, the other was redposited into the clay floor of building A19, which lay immediately over the stones of A64.

AREA: N & E

PERIOD: B1

A65. 141 rubbish layer in the second jetty
142 rubbish and wood chip layer in the second jetty

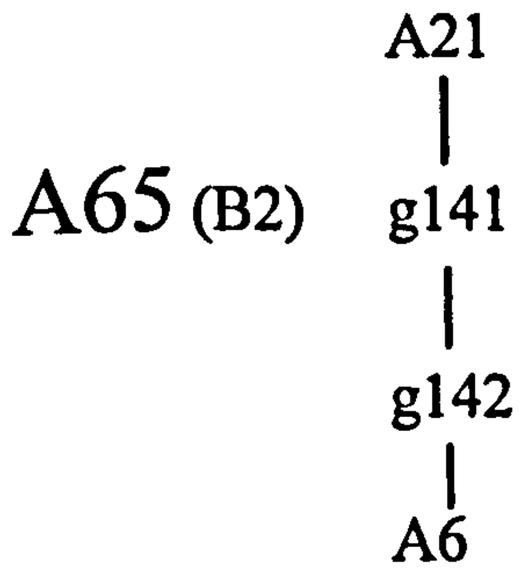

These rubbish deposits accumulated over the second jetty during the second phase, B2, while it still functioned as a jetty. Finds of metal casting waste, particularly crucibles, indicate that some of the debris in A65 derives from the use building A2 on the northern plot.

AREA: E

PERIOD: B2

A66. 41 six stake holes in the northern wall line
86 burnt daub and clay floor layers
87 clay floor
96 burnt wall and sill beam fragments
97 burnt sandy silt with charcoal
99 laminated clay and sandy use layers
100 stake holes in a wall line on the northern boundary of the plot
103 laminated use layers
104 stake holes forming a small screen on the floor g106
105 clearance from hearth
106 clay floor
108 fills in boundary ditch, with wood fragments
109 sill stones set in redeposited clay - northern plot boundary
110 red, iron rich fills in boundary ditch
113 laminated use layers
114 clay floor
116 oval structure of stones packed in clay
119 small pit, with disturbed, rubbishy fill
124 post hole
126 plank and post hole in wall line
137 stake holes forming a right angle corner
157 a group of six stake and one post hole, the edge of an internal structure, probably a wall bench, along the southern wall line.
194 domestic rubbish in the eastern end of the building
195 clay floor layers under g194
245 post hole in the southern part of the building
271 shallow post hole
376 domestic rubbish in the centre of the building
466 stone filled pit, probably a large post hole
468 clay flooring
469 sill stones set in clay - southern wall line
470 damage to A66 by fire - charcoal and ash in situ
471 burnt post hole
474 post holes and the burnt remains of posts and planks, deriving from a north-south cross wall
515 stone packing and plank hole on N. plot boundary
518 stake holes, and piece of withy from the edging of a wall bench
887 rubbish layers in the western corner of the building
888 brown clayey silt layers - earth floor or clay floor including much rubbish

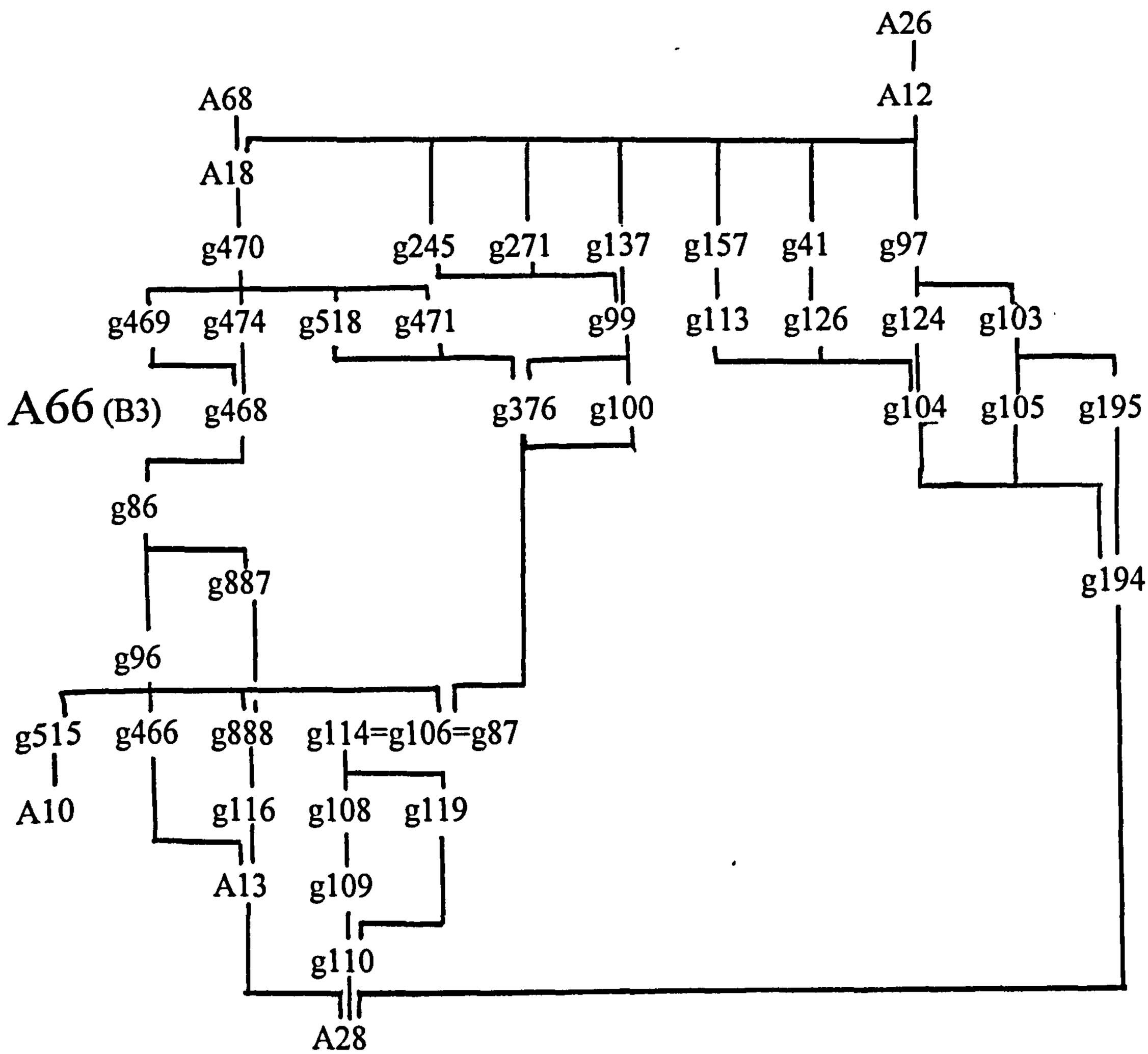

A66 is the first building on the northern part of the plot. It may, fractionally, post-date the booth A2, but functions during the same period. Structural evidence for the type of construction is limited to sill stones for the northern and southern long walls (g469 and g515) which indicate the presence of sill-beams, and load-bearing post holes (g471 and g466). Group 100 indicates that the north-eastern long wall was at least partially constructed of wattle, while groups 86 and 96, in the south-eastern end wall, indicate that the wattle was covered with daub.

The post and plank holes of g474 suggest that the building was subdivided into at least two rooms. The easterly of these contained the ambiguous structure of clay and small stones represented by g116, which, from its central position and constructional details (see group description) could be a hearth. There is, however, very little evidence that g116 was exposed to heat, as the clay and stones of which it was built show only minimal signs of burning on the upper

surface, which could easily result from damage to the building by fire (which is suggested by g470). Deposits in workshop A30 extend into this part of A66 through an apparent door opening immediately south-west of g116, which also makes it difficult to interpret g116 as a hearth. It is difficult to find an alternative interpretation for the structure, and if this is not a hearth, then the building appears to be without one, which would be unusual; it may lie outwith the excavated area. Parallel with g116 is g119, which is similar in form, size, construction and placement within the building, but shows no sign of heat damage. It is possible that these two features were pads for load-bearing posts, as the underlying ground surface was both uneven (over the edge of the quay A64), and soft.

The stratigraphic position of g471 is unclear, but although its destruction level lies above g470, its construction must logically pre-date this and therefore belong to A66. This is confirmed by the fire shattering of the stones in the post-packing, which suggest that the destruction of the post hole was a part of the same event as the destruction of the whole building by fire.

On the basis that g116, which stretches from the Eastern into the Northern Area, can be used as a stratigraphic marker in the respective matrices, it has been possible to assign g114=g87=106 to this A-unit. These groups are badly cut away by Stolpe's excavations, but can be identified with each other on the basis of their identical relationships to overlying and underlying deposits, and the presence in g87 and g106 of similar inbuilt bowl-shaped depressions filled with laminated layers of ash, sand and charcoal*.

The width of the building was 5m, and the excavated length 11m. It seems likely, given the size of later buildings on the plot, that the north-western end wall lies immediately outwith the edge of the trench. A strong internal division of the deposits into three areas along the long axis of the building makes it probable that both long walls had wall benches for part, if not all, of their length. The wattle edging of the benches survived in g518, g157, and possibly g137.

* In the northern part of the Eastern Area, a redeposited clay floor was found in which were constructed a number of oval bowl-shaped depressions ca 20 cm long, 12 cm wide and up to 5 cm deep. These were heavily burnt, in places the clay had melted, and in one case (R004243, Fnr 73719), the bowl was filled with ash and fine particles of charcoal.

The precise function of these 'clay bowls' is unclear; they are certainly designed to hold a bed of charcoal, but whether they were used in connection with the melting of metal in crucibles, or to pre-heat moulds before pouring in the molten metal, cannot as yet be determined.

Torbjörn Jakobsson

AREA: N & E

PERIOD: B3

A67. 152 redeposited clearings from an industrial hearth
190 domestic and metal-working debris, very trampled
246 redeposited ash in the southern lane
247 metal-working rubbish deposited outside the workshop
248 metal-working rubbish outside the workshop
249 fill layer in the southern lane
250 laminated ash layers redeposited in the southern lane
251 industrial rubbish, with an admixture of domestic rubbish
927 large group of rubbish layers in the southern lane.

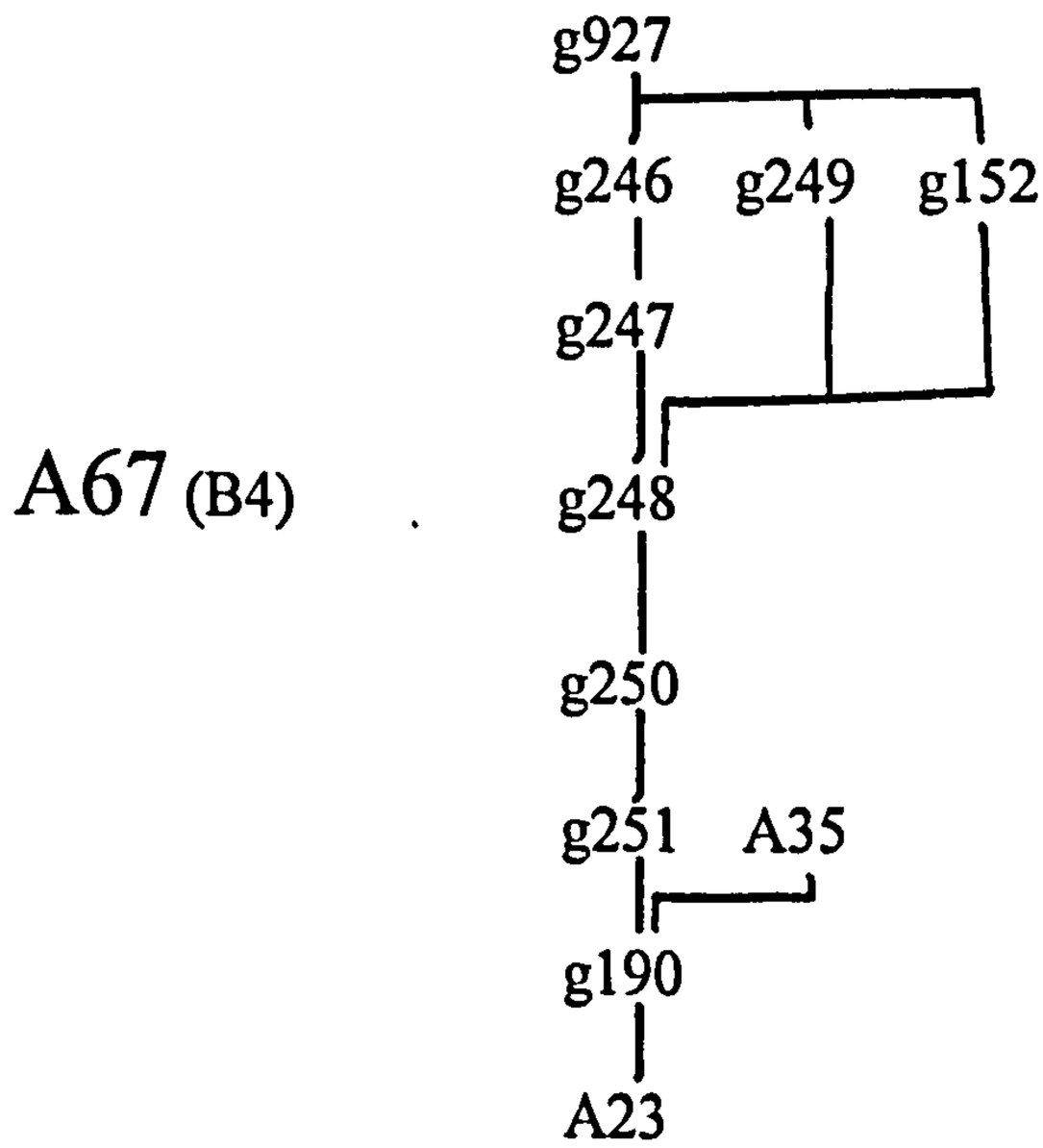

This deposit series includes the remains of a fence line bordering the south-western edge of the plot, and the rubbish layers which built up on the southern lane during the occupation of A35 and A41. Small areas of stratigraphic linkage over the north-eastern edge of the jetty foundation (A108) provide a secure phasing for these deposits despite their extensive disturbance by Stolpe's excavations.

A67 is the result of progressive, but relatively rapid, rubbish accumulation in the lane. It seems likely that by phase B4 this was of decreasing importance as an access to the waterfront, as the water level fell, and that this lack of traffic was reflected in the low level of maintenance which allowed extensive rubbish accumulation.

AREA: E

PERIOD: B4

A68. 471 small stone packing
473 clay floor, including domestic rubbish
475 hearth
511 sill stone packing oriented NW - SE along the northern plot boundary
608 sill stone packing oriented NW - SE

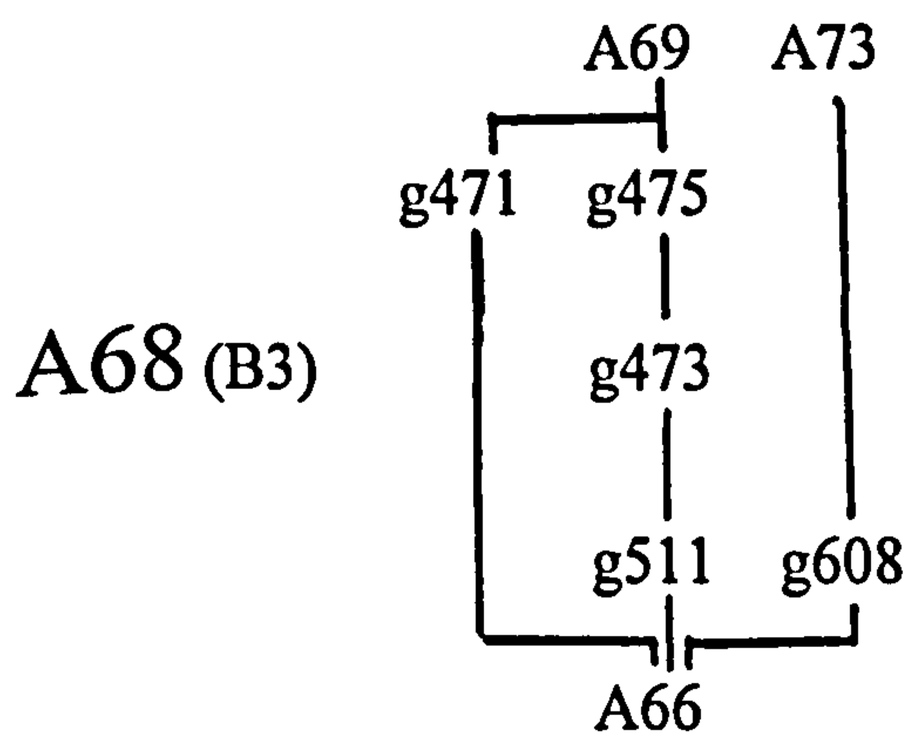

A68 represents the substantial renovation or rebuilding of the north-western end of A66 after damage by fire. It is contemporary with A12 in the Eastern Area.

This renovation involved important internal alterations. The longitudinal divisions in the floor layers so evident in A66, and there interpreted as resulting from wall benches, were missing in A68. An oval, centrally placed hearth, g475, dominated this deposit series. s3922, in g473, included vitrified clay fragments which may have derived from an oven-like superstructure associated with this hearth, or may have derived from the metal working which evidently continued in this building, and which is represented by finds of crucible and mould sherds in these floor layers.

AREA: N

PERIOD: B3

A69. 476 hearth, reconstruction of g475 (A68)
477 hearth, reconstruction of g476
478 laminated ash and charcoal associated with g476 & g477
479 laminated occupation deposits
480 laminated occupation deposits
481 cut and dumped fill in the northern part of the building
893 post and stake holes, ancillary structures to hearths g476 and g477

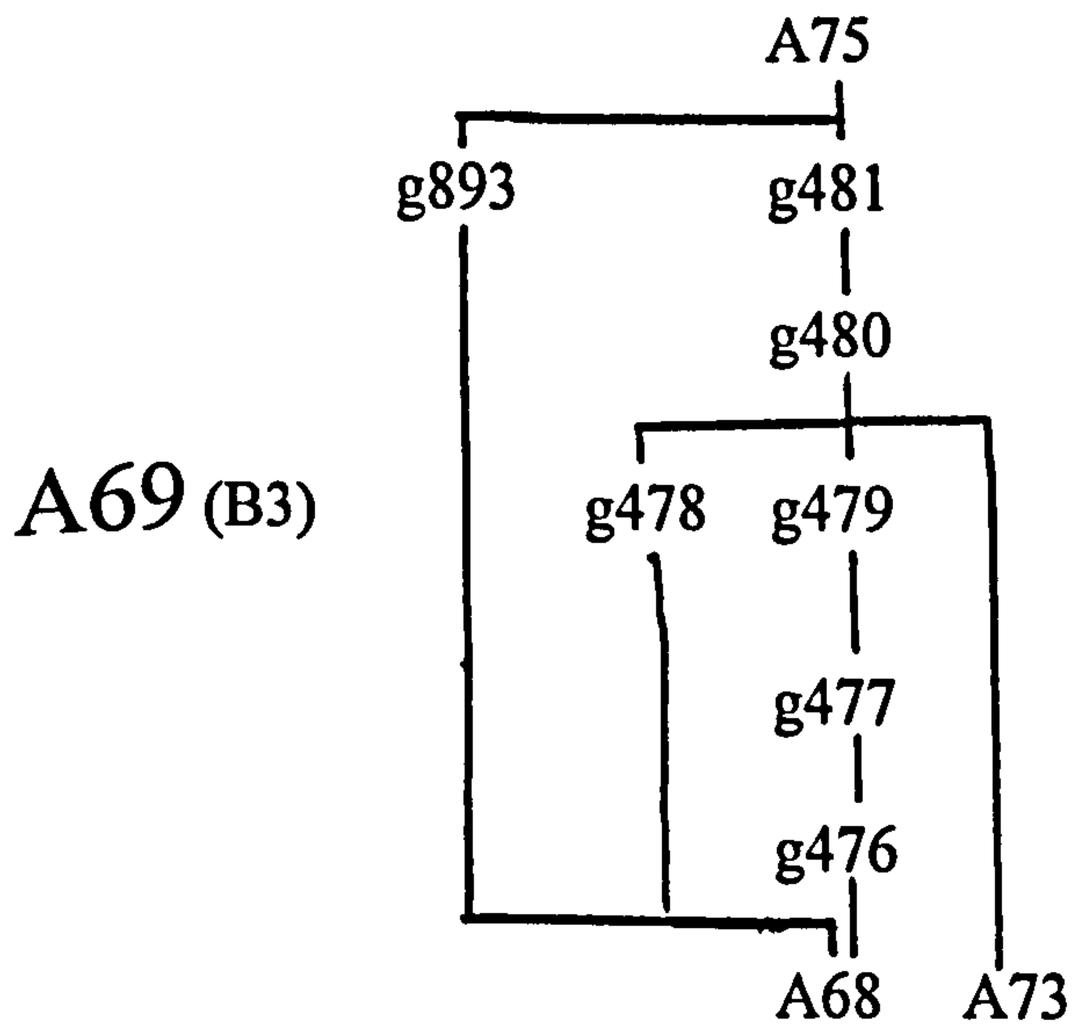

A69 is a renovation or reuse of building A68, on the northern part of plot. It includes two rebuilds of hearth g475 (A68), on the same site, and the layers of ash and charcoal associated with the use of these, within the framework of the building established in A68.

The finds from these deposits include debris from metal working, though in small amounts, and a 'wasp' bead (F83383) suggesting a late eighth century date for the structure. Three other beads, from g480 (F82830 and F82831) and g479(F82845) give an interesting hint of possible eastern trade connections even at this early date. The first, a conical bead with an 'eye' pattern, is probably from the Central Caliphate (Callmer's type GHJ), the second from Byzantium or a Byzantine province of the Caliphate, and the third, a flat mosaic (type J001 after Callmer) also from the central Caliphate (Kjellén, pers. comm.)

AREA: N
PERIOD: B3

APPENDIX THREE

A-UNIT DESCRIPTIONS FROM BIRKA 1990-1995

A70. 527 domestic rubbish deposits
533 rubbish and use layers in the yard area
536 domestic rubbish on shore line

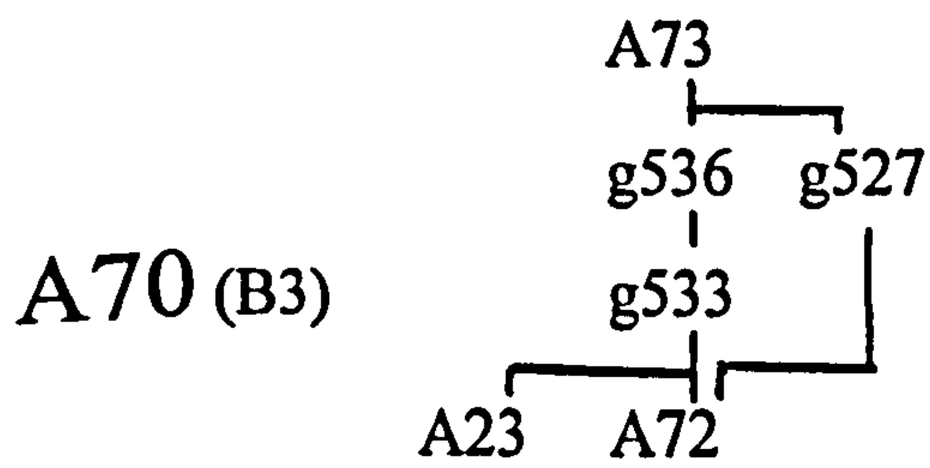

These rubbish layers on the western edge of plot, and shore line, post-dated the construction of workshop building A19 and derived from its use. They were stratigraphically immediately later than A23, but had a similar duration, and were chronologically contemporary.

Drops of copper alloy, crucible sherds and slag were present in these deposits in large amounts, but relatively small amounts of broken moulds were found. This may be a reflection of the use of different areas of the buildings and plot for different parts of the casting process. Given that the contemporary northern building (A66, A68 & A12) had warming hearths, and that the related rubbish deposits in the northern lane contained large amounts of moulds, it may be that the casting took place in the northern building, while the southern was used for processes relating to the refining and melting of the metals.

AREA: N

PERIOD: B3

A71. 456 water deposited sand with lenses of vegetation
520 ash, and charcoal layers
521 flood layers with lenses of decayed vegetation
522 intermittently water-deposited domestic rubbish
617 rubbish on the shore line

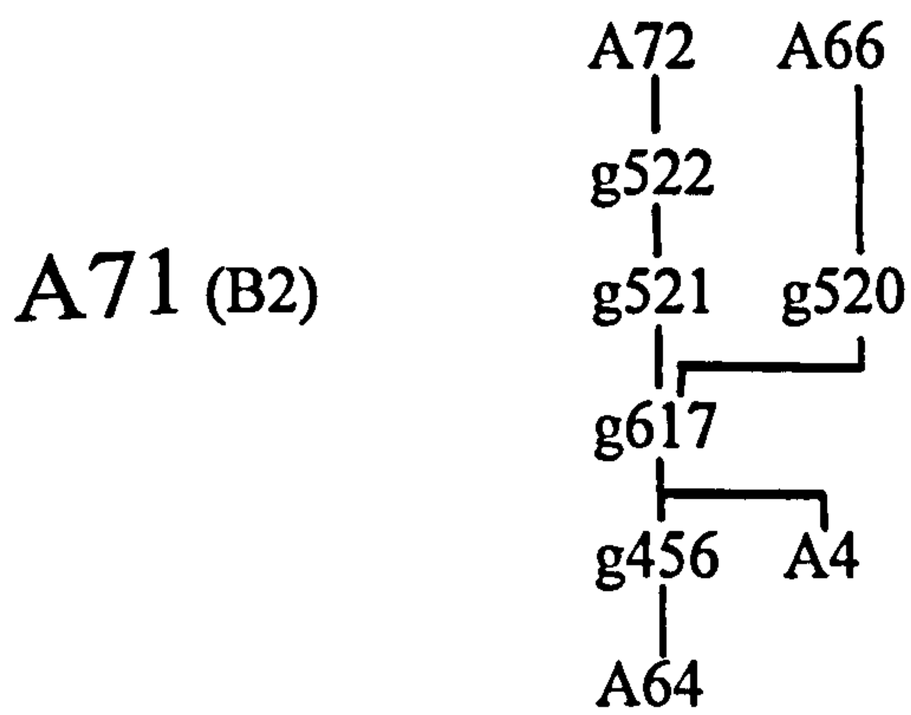

These rubbish layers on the western area of the plot, and shoreline, pre-date building A19 and are therefore contemporary with the first metalworking on the site. Consistent shifts in the deposits along a line oriented NW - SE suggest that the lower groups, particularly g617, may have been deposited while the second jetty was still functioning, and therefore consist of material thrown out into the water.

Despite its low stratigraphic position, g456 had to be grouped here because it was excavated under difficult conditions in the last days on site, and proved in retrospect to include large amounts of casting debris from phase 2. It includes also material from phase one, no doubt, but it has no integrity as a phase one deposit. Group 456 was clearly deposited underwater, had a high organic content, and very little internal stratigraphic definition, suggesting that it accumulated very rapidly.

The finds include very large amounts of casting debris through all the deposits, and also many beads. Of particular interest is F82852 (Callmer's type G050) in g522, which is believed to come from the Central Caliphate. Given, however, that only one example was found in these deposits, this must be treated as potentially intrusive.

AREA: N

PERIOD: B2

A72. 523 rubbish layers marking the western plot boundary, including sill stones
882 post hole and two stake holes on plot boundary

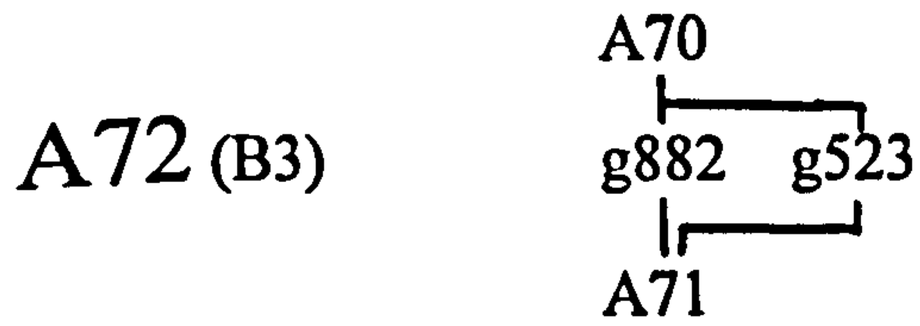

A72 is the first recorded fence line on the western plot boundary. Group 523 includes both rubbish and sill stones, but the rubbish layers are so confined to the plot boundary that it is convenient to use them as indicating the boundary, in the absence of more structural elements. The post and stake holes in g882 are at the eastern end of the boundary, but stratigraphically and structurally clearly belong in the same deposit series. While the underlying rubbish layers of A71 do not respect this line, the succeeding A70 does.

The importance of A72 as a chronological and structural marker is greater than its rather unimpressive appearance would suggest. After this point in time, the shoreline is clearly dry enough to build on, and the second jetty cannot function as a jetty.

AREA: N

PERIOD: B3

A73. 513 redeposited sand layer
519 large stone packed post hole
526 shallow square feature filled with sand and clay
528 occupation deposits
532 clay floor
534 occupation deposits
535 occupation deposits
537 hearth

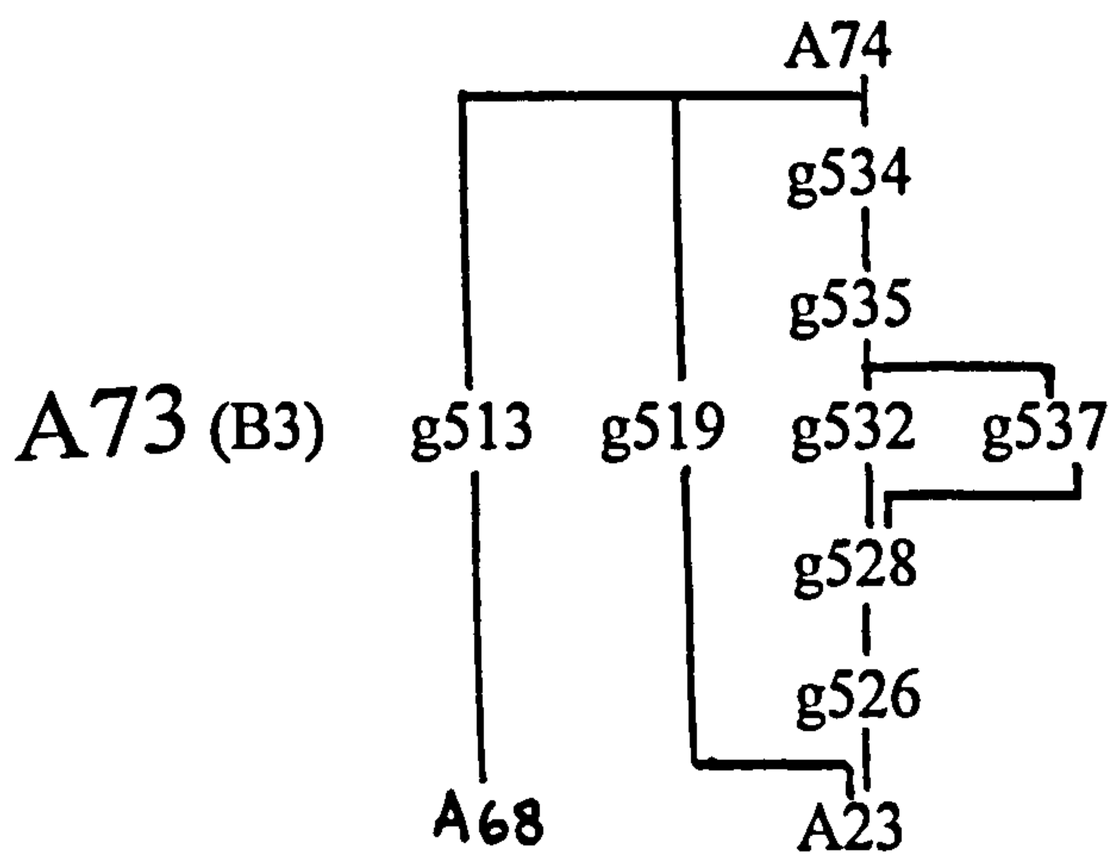

A73 is a relatively formless deposit series. It is clear from the geographical limitation of groups 528, 534 and 535 that they built up within a building, whose southern wall line followed the line established by A23 in the Eastern Area. Unfortunately, no additional evidence survived in the Northern Area for the nature of that wall line. A small hearth in the north-western end of the building (g537), over a redeposited clay floor (g532) appears from the finds in the surrounding deposits to have had an industrial function. Very large amounts of crucibles came from this deposit series.

A curious square feature (g526), barely distinguishable, c. 1 x 1m, and only 0.1m deep, was cut into the clay floor. This was filled with laminated layers of sand and clay, and was interpreted as an area for placing moulds during casting. However, given the relatively few moulds from this area, this seems increasingly less likely.

AREA: N

PERIOD: B3

A74. 538 hearth
539 charcoal raked out from hearth
540 repair to and use of g538
541 domestic and industrial rubbish on shore line
542 redeposited ash
546 rubbish redeposited in the northern lane
547 warming hearth (casting bowl) and use layers

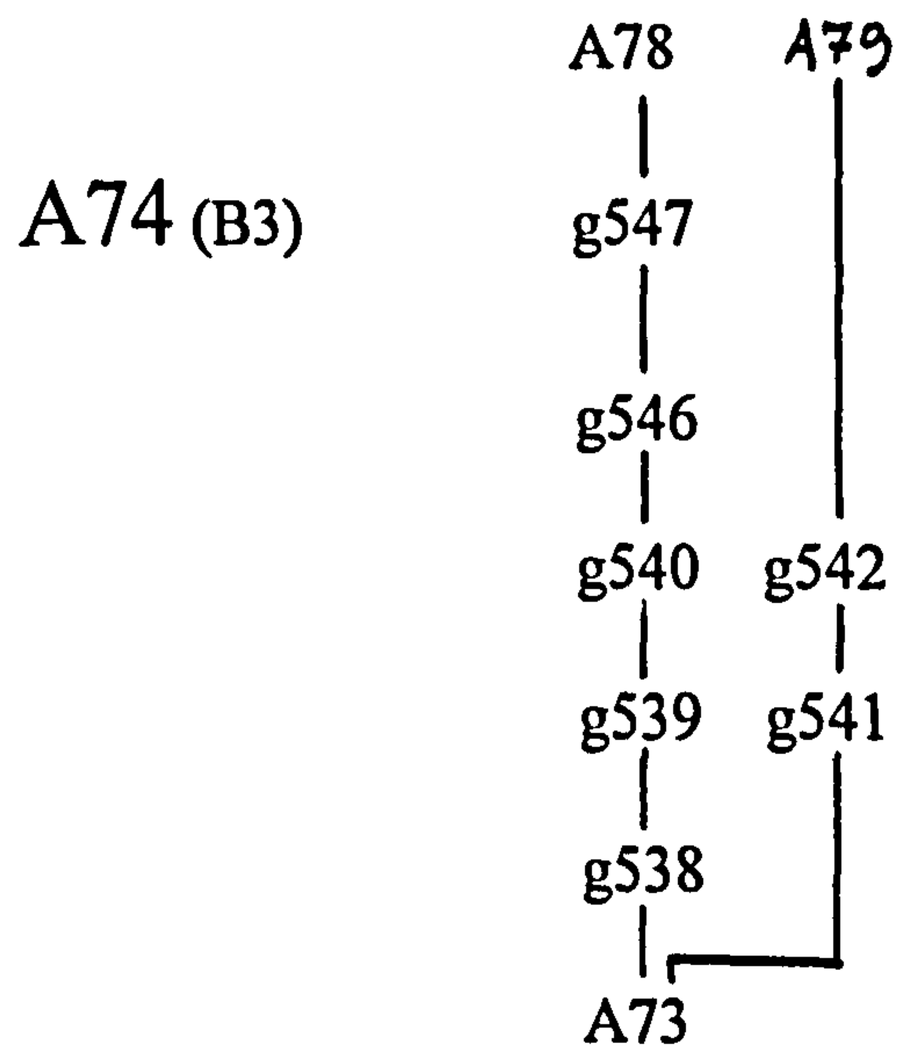

As with the preceding workshop deposit series, A73, this was a rather formless rebuild and use of the southern workshop. It proved impossible to separate the layers within and outwith A74, as both were continuous with and derived from the use of hearth g538.

There was no surviving evidence for the wall lines of this building, although the southern edge of A74 respected the established southern wall line of building A23 and its predecessor A19. The continuity of the use layers of the building, however, with rubbish layers over the plot and shoreline, suggested that the north-western end of the building was either completely, or partially absent. The lamination of the layers around the hearth made it clear that the area was roofed; the rubbish layers outside the building were, in contrast, unlaminated and much more disturbed.

The finds from these groups continue to reflect the metal working function of the buildings on the plot, with a predominance of crucibles over moulds suggesting that this part of the plot may have been used for metal preparation rather than casting.

AREA: N

PERIOD: B3

A75. 482 sill stone packing
483 clay layers around and over g482
484 use and occupation layers over g483
486 use and occupation layers over g483
487 hearth
548 sill stones set in clay
613 sill stones
616 sill stones
883 stake holes forming a diffuse internal division, NE - SW
897 post hole

A75 (B4)

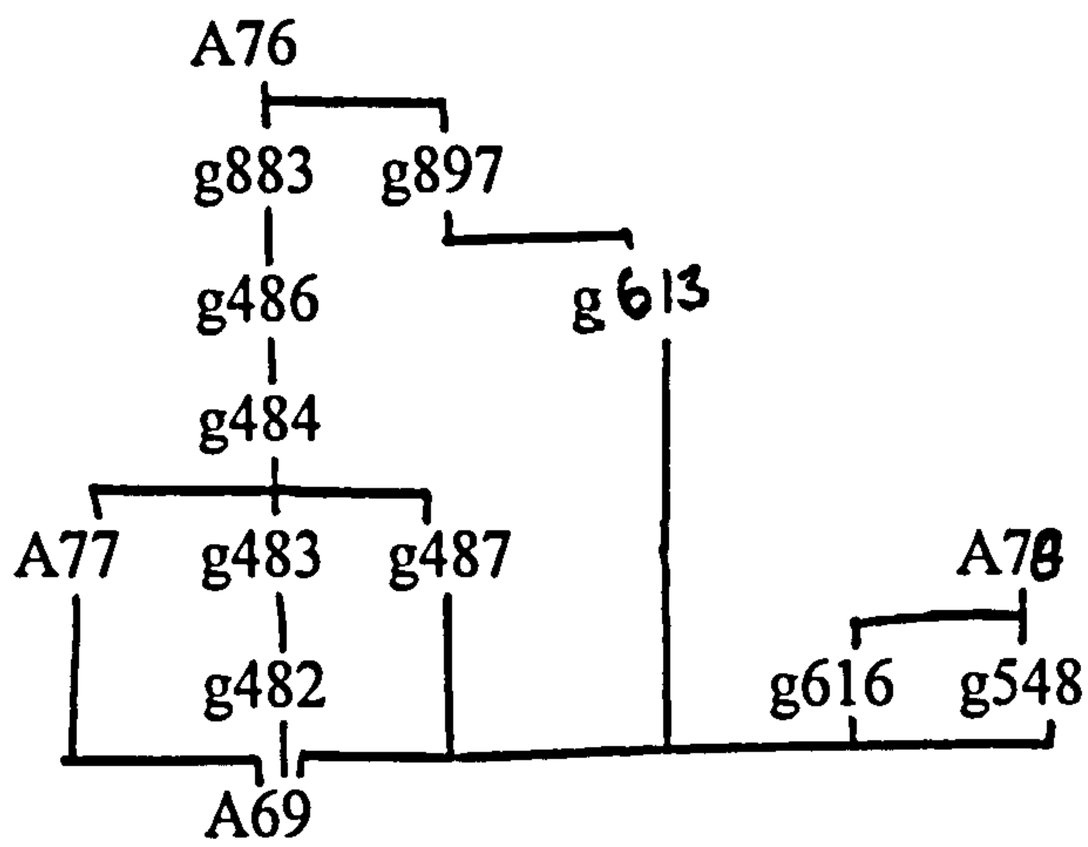

This deposit series formed a new northern building on the plot. A hearth (g487) was constructed at the north-western end of the building; as was typical of the site, this was of stones packed in clay, and oval in shape. A post hole immediately north-east of the hearth may have supported an ancillary structure. The north-eastern and south-western long walls were set on sill stones, and no evidence survived for their constructional details.

Group 883 was placed here, despite only being noticed lower down in the excavation, because if it derived from the underlying structures, i.e. A69 or A68, then the stake holes were precisely in the middle of a hearth. It would have been easy to miss these stake holes cutting through g479 (A69), which was a charcoal rich layer similar to the fill of the holes themselves. The balance of probability therefore placed them here, where they form a diffuse internal wall line, or indicate the placement of a piece of fixed furniture.

The building extended out of the trench to the north-west, and to the south-east, where it was cut by later gable lines from phase B5 and B6. Its width was 5m. Metal working debris continued to be present in this building.

AREA: N

PERIOD: B4

A76. 488 hearth reconstruction
489 laminated charcoal and ash from g488
490 cut and fill for small pit, function unknown
614 two post holes and three stake holes

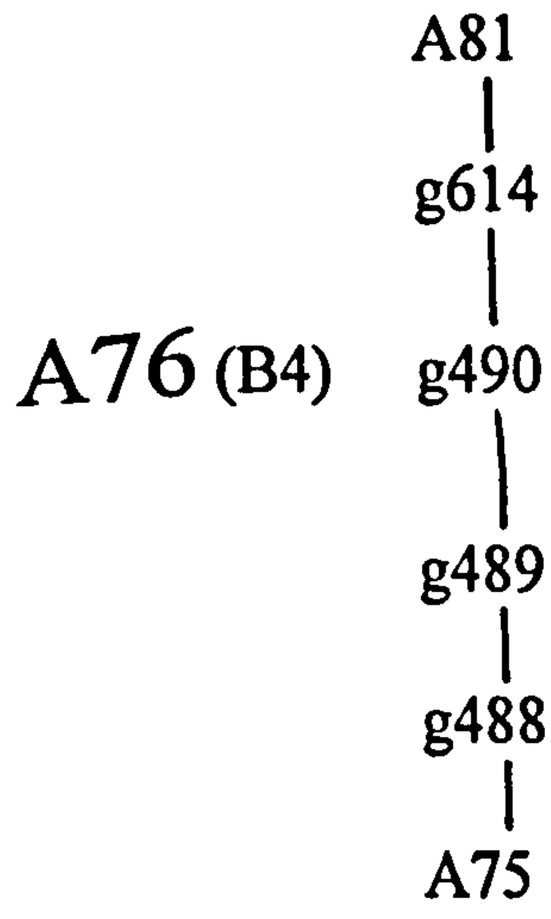

Deposit series A76 was a renovation of building A75. The hearth at the north-western end of the building was reconstructed (g488), and the south-eastern long wall reinforced with posts and stakes (g614), but the north-western sill stone founded wall appears to have continued in use from A75.

There was an apparent narrowing of the building, from 5m in A75, to 4.5m in A76, but this may be explained by the fact that the stake and post holes in the south-western wall line (g614) appeared to have followed the inside line of the wall as marked by sill stones g613 and g616 (A75), and may therefore have resulted from a replacement of the internal part of the wall, possibly panelling, rather than the main body of the wall itself.

These deposits contained only limited amounts of smithing and casting waste, suggesting that, although metal working clearly still continued on the plot, it was not the dominant activity in this room.

AREA: N

PERIOD: B4

A77. 609 planking, oriented NE - SW
610 domestic and industrial rubbish layers in the northern lane
612 rubbish layers in the northern lane

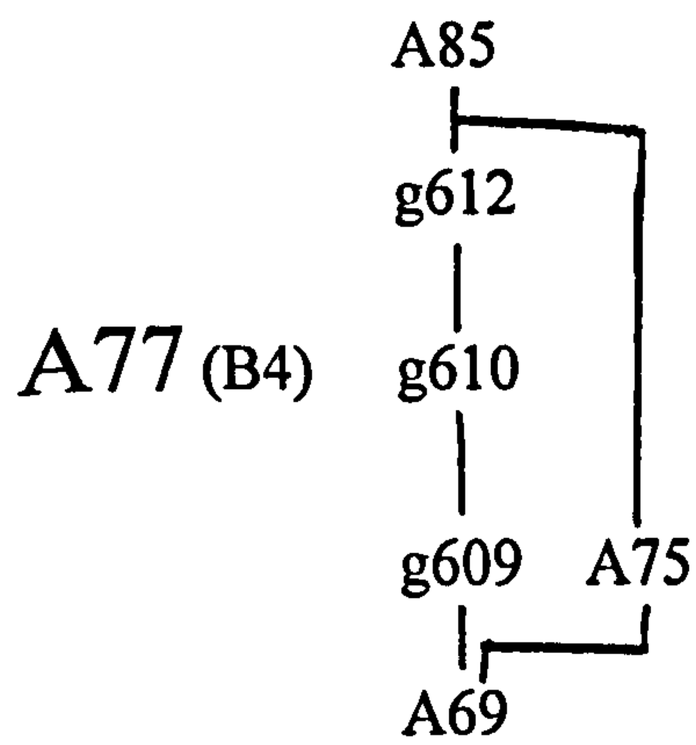

The fragmentary remains of NE - SW oriented planking in g609 derived from the resurfacing of the northern lane. The rubbish layers of groups 610 and 612 were contemporary with the use of building A75 and its renovation A76, and showed the same pattern of rubbish disposal, with primarily domestic debris, mixed with a relatively small proportion of industrial debris which nonetheless did not appear to be residual. It seems probable that the disposal patterns of rubbish from the plot reflect the organisation of activities within it.

AREA: N

PERIOD: B4

A78. 543 rubbish layers on the shore and into the plot
545 rubbish layers on the plot, extending onto the shore
549 domestic and industrial debris
550 domestic and industrial debris
552 clearance from hearth g553
553 hearth
554 renovation of g553
555 charcoal and ash from g554
566 use layers associated with g554

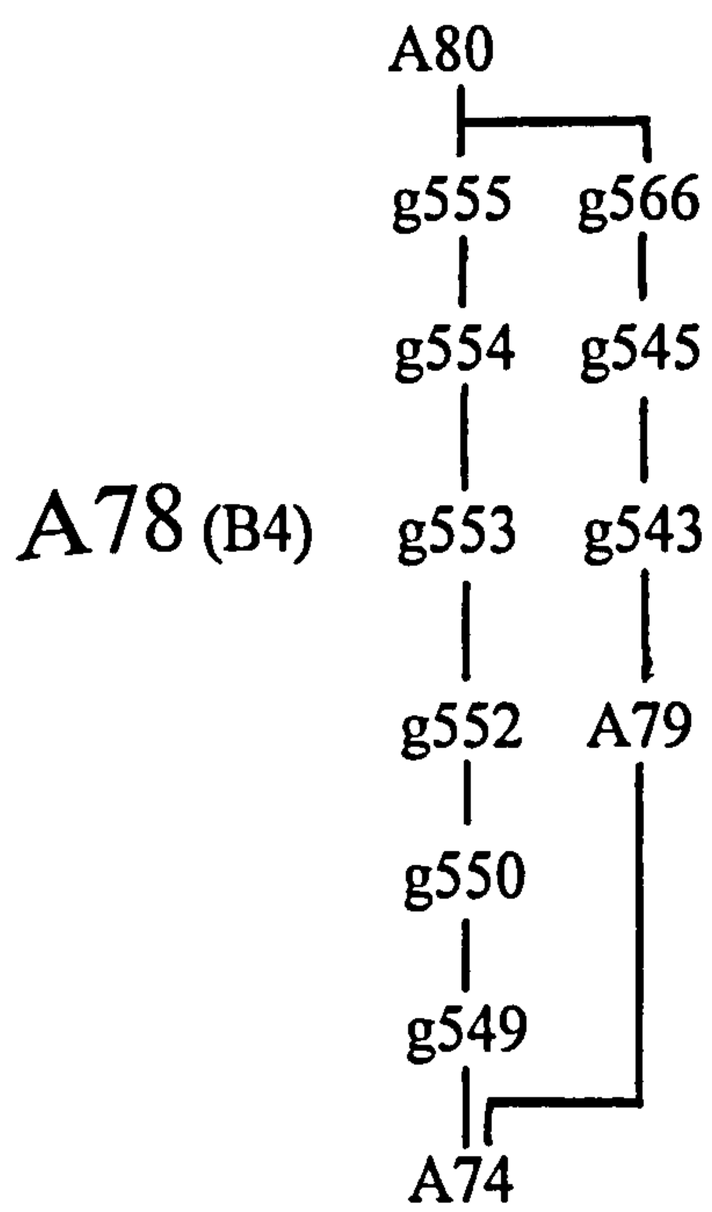

These groups resulted from the use of a workshop on the southern part of the plot, and the disposal of rubbish from the workshop on the plot and open area to its west. It was not possible to separate the deposits within the workshop from those which spread out onto the plot and shoreline, which strongly suggested that there was no western end wall to the workshop building. No structural evidence could be found for an end wall, and the hearth g553 & g554 was located in the area where the western wall might have been expected. Shifts in the nature of the deposits, however, from highly laminated (e.g. g555) at the eastern edge of the deposit series, to less laminated, thicker and more finds rich (e.g. g565) at the western edge of the deposit series indicate that a roof almost certainly extended over the eastern area, stopping immediately to the west of the hearth.

The layers in the western part of the deposit series also respected the line of fence A79, which was also marked by a shift in the character of the deposits and their contents from compact, with smaller and more fragmentary finds to the east of the fence line, to softer and with more intact finds to the west.

Finds from these deposits conformed to the pattern established in phase B3, with large amounts of crucible fragments, providing evidence of both copper alloy and gold working in the form of metal droplets within the vitrified surfaces of the ceramic. Also found in these deposits were numbers of fragments of ceramic of crucible-type fabric which appear to have been used for melting recycled metal scrap (T. Jacobsson, pers. comm.).

AREA: N

PERIOD: B4

A79. 544 pad stone for post
577 pad stone for post
884 post and stake holes on the south-eastern side of the workshop
896 pad stone and scattered sill stones

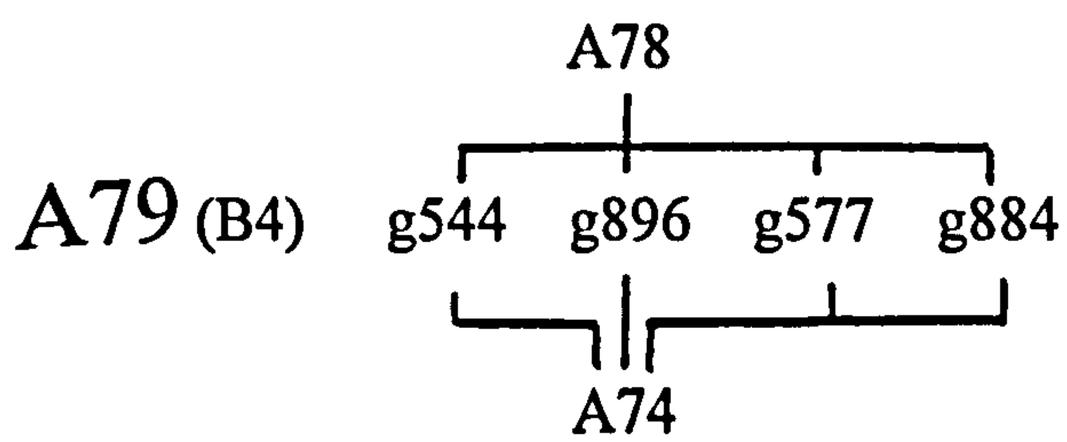

This diffuse, curved line of sill stones and post holes marked the western plot boundary contemporary with the use of workshop A78. It stretched 2.5m north-west along the south-eastern plot boundary, continuing the line of the south-eastern wall of the southern building, then swung through 90°, parallel with the shoreline along the north-western boundary of the plot.

AREA: N

PERIOD: B4

A80. 556 hearth
557 cleared charcoal and ash from g556
560 post hole
567 redeposited sand floor
570 two post holes
885 stake holes in the southern wall line
886 stake holes parallel to g885, inside the southern wall line

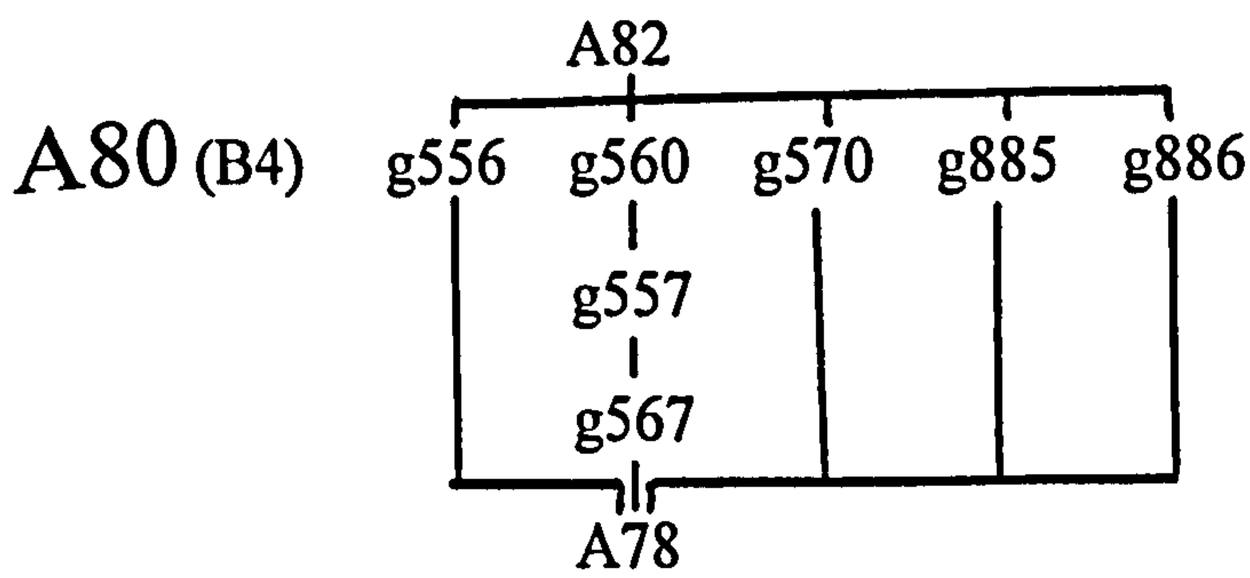

A80 was a rebuild of the southern building on the plot, with a large, rectangular or square hearth, at least 1.1 x 1m (g556), and a redeposited sand floor (g567)to the south of the hearth, both severely damaged by Stolpe's excavations. It seems likely that the hearth was framed with wood; stake holes in g886 formed a right angle around the south-western and north-western edges of the hearth, where there was a narrow gap between the structure of the hearth itself and the layers deriving from its use (g557). Two post holes, one either side of the hearth, indicated that there were probably ancillary structures associated with it; what these were was not possible to determine.

The massive size, meticulous construction and heat damaged nature of the hearth suggested that it did not have a purely domestic function, and this was supported by the finds from the deposits which, although few, were almost exclusively industrial in nature. Vitrified clay, slagg, and moulds, particularly of Petersen's type 58 brooches, were all found in the sand of the floor (g567).

AREA: N

PERIOD: B4

A81. 485 hearth
491 levelling for new floor surface
492 use and occupation deposits related to g485
510 ash cleared from hearth g485
611 laminated layers of industrial rubbish

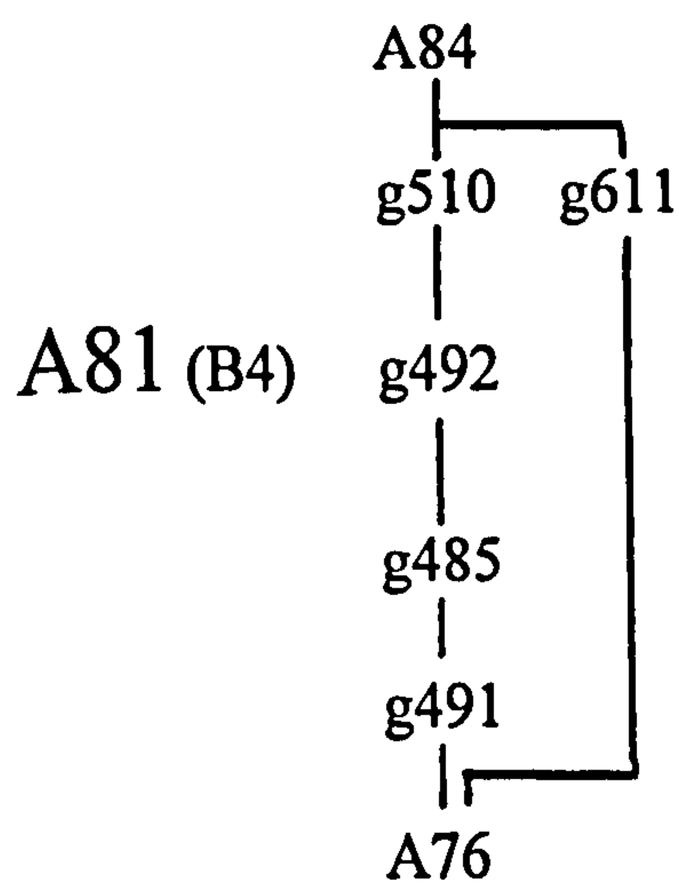

Deposit series A81 was a renovation of the interior of the northern building A75/A76. The existing floor surfaces were levelled (g491) in preparation for the reconstruction of the hearth on the same site (g485) as the hearth in the underlying deposit series A76.

Finds from these deposits showed the familiar pattern of significant, though relatively not dominant, amounts of metal working debris.

AREA: N

PERIOD: B4

A82. 558 clearance from hearth g565
562 clearance from hearth g565
565 hearth
568 clearance and use related to hearth g565
587 redeposited rubbish dumping in the yard

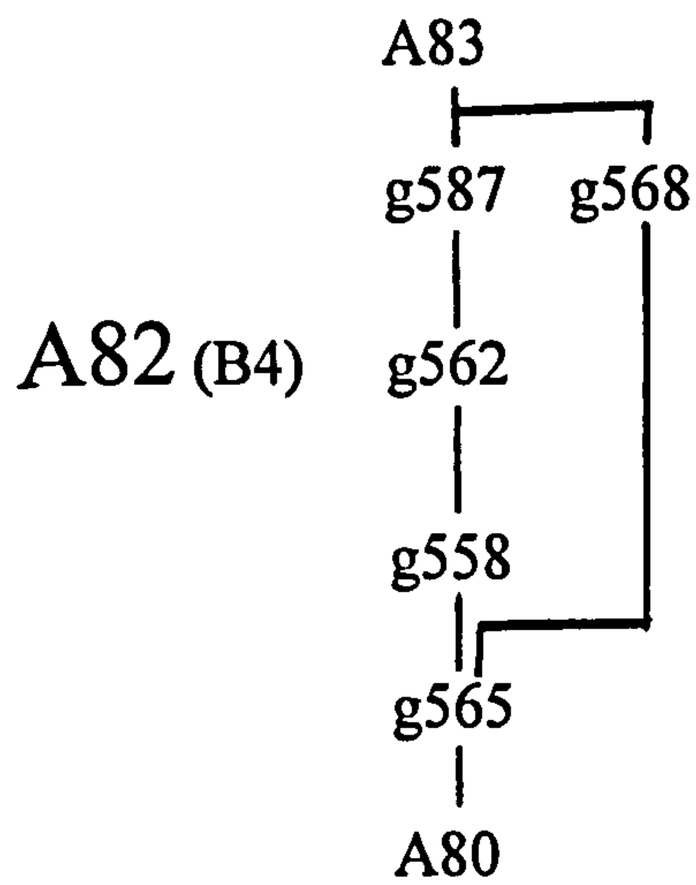

These groups formed a renovation of workshop building A80, on the southern part of the plot, and its use. The large square or rectangular hearth was resurfaced and extended westwards, to a maximum size of 2 x 1.5m, and its size and degree of heat damage emphasised the non-domestic character of its use. As previously, it was difficult to separate the rubbish deposits inside the building from those outside, and g587 was therefore included in this deposit series.

These groups were given a terminus post quem by a clipped Abbasid dirham in S3691 (g568) which was dated to AD 760-809 (F77243). Other than that, the finds consisted largely of metal working debris, particularly crucibles and crucible-type sherds.

AREA: N

PERIOD: B4

A83. 559 domestic and industrial rubbish
561 fills in pit
563 rubbish and hearth clearance layers
564 redeposited ash, on the yard outside the workshop
569 disturbed area, filled with charcoal and ash
898 hearth

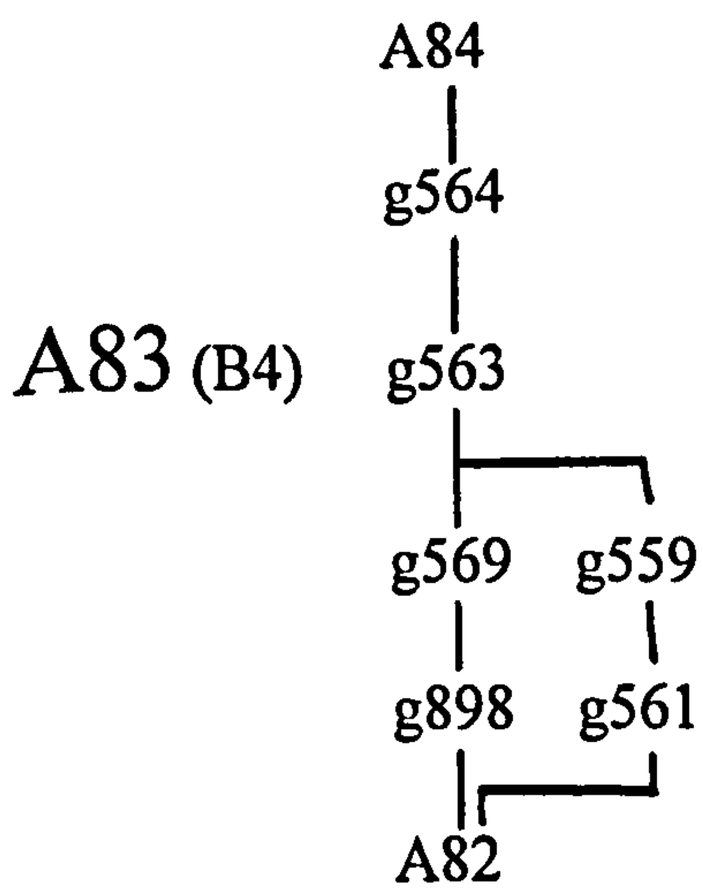

A83 was a renovation of workshop A82, with a hearth reconstruction (g898) on the same site as the underlying hearth in building A82. Associated with this reconstruction was a pit (g561) cut through the underlying hearths, and backfilled with the disturbed ash and charcoal which had been dug out. The function of this pit was unclear, partly because it itself was cut by Stolpe's excavations, but it respected the eastern edge of hearth g898, and is stratigraphically contemporary with it.

The groups which derive from the use of hearth g898 respected a straight line along the south-eastern edge of the building, which indicated a wall or more probably a wall bench edge built in such a way that it left no other archaeological trace. A wall bench with a sill beam construction along the south-eastern long wall would explain the extent of these layers.

AREA: N

PERIOD: B4

A84. 493 redeposited clay floor
494 use layers, probably levelled for overlying structure
495 rubbish layers spread into the northern lane
496 laminated ash and charcoal on sand casting floor
499 two post holes in a wall line
588 clay floor, with overlying casting sand
589 use layers over g588
591 clay floor
592 casting sand
593 use layers over g591/g592
899 post holes in a cross wall

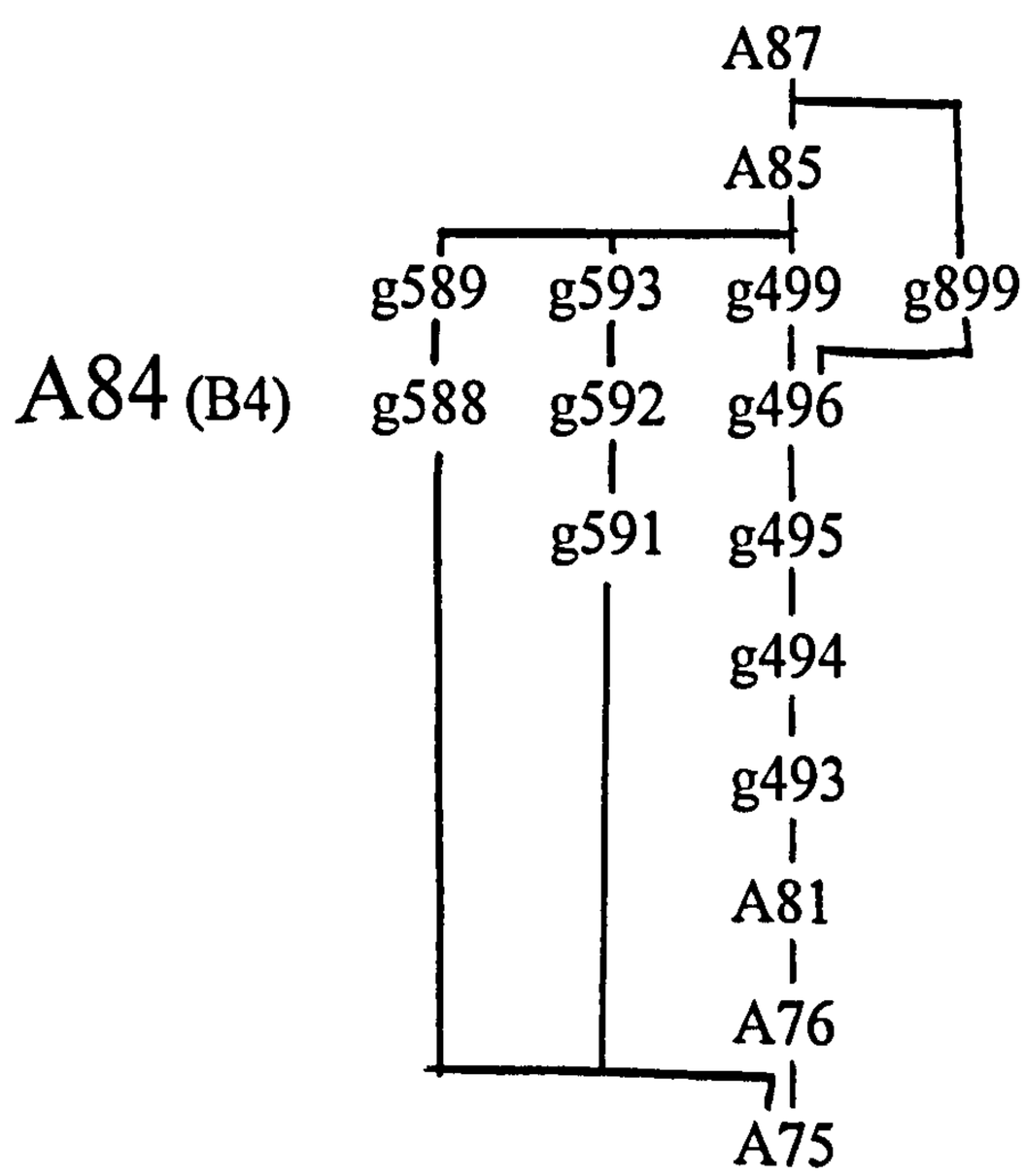

A84 appeared to be the extensive renovation and use of northern building A81, with the same hearth. It is, however, possible that the building was completely renovated, and that the hearth for this building lay outwith the excavated area. Redeposited clay layers g493 and g494 did not, however, completely cover the site of hearth g485 (A81), which may have continued in use.

The width of the building was 5m, and its surviving length, 4m. It was cut away at the south-eastern end by Stolpe's excavations, and extended out of the excavated area at the north-western end.

The presence of two groups (g588, g592) which contained areas of the extremely fine grained sand which had been

found in association with industrial hearths in the southern buildings (e.g. A2, A19) and also in some of the earlier northern buildings (e.g. A66), suggested the possibility of shift in use of this building or room away from domestic and towards industrial occupation. This was borne out by the larger amounts of metal working debris in the finds from this deposit series, with particular concentrations of crucibles in groups 496 and 494.

AREA: N

PERIOD: B4

A85. 497 rubbish layers
498 redeposited ash
585 burnt post hole
586 burnt daub and wood
590 post holes in gable line
594 shallow ditch parallel with gable
615 two post hole packings (construction level)

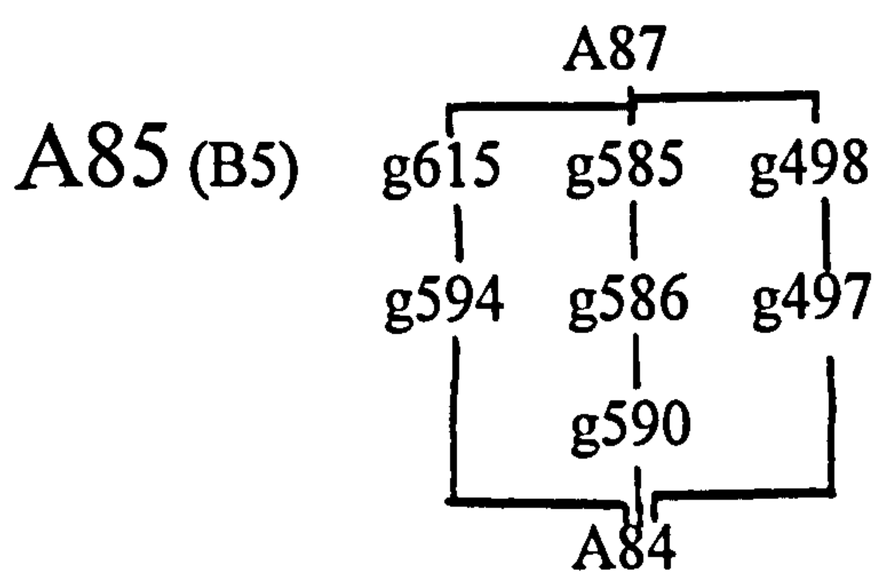

A85 marked a substantial shift in the organisation of the northern part of the plot, and as such formed the marker for the beginning of a new phase. The northern building, of which A85 was the western gable line, shifted at least four metres eastwards, and as such, was only visible as a gable line 5m wide, and only 0.5m surviving length, along the western edge of Stolpe's excavations. Immediately to the west of the gable was a shallow ditch 5 x 0.5 x 0.3m, crossed by three stepping stones (g594). This appears to have been a drainage ditch, which emptied north-westwards into the northern lane.

The area to the west of the gable line, which had previously been overbuilt, became a yard surface which was used for rubbish dumping (g497). Finds from this surface indicate that metal working continued on the plot into phase B5.

AREA: N

PERIOD: B5

A86. 576 mixed, heterogeneous rubbish layers
578 metal working rubbish
579 rubbish
580 rubbish, containing destruction level of wattle fence line on plot boundary

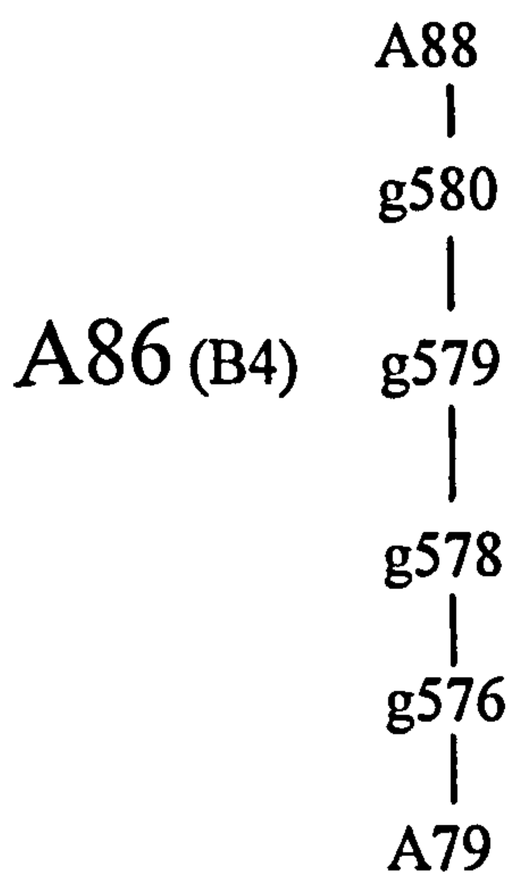

Deposit series A86 related to the use of the western edge of the plot, opposite the north-western end of the southern building. These rubbish deposits respected the line of fence A79, and included in g580 the destruction level of the fence. The destruction of fence line A79 marked the end of phase B4 on the southern part of the plot.

The finds from these groups included metal working debris, which derived from the continuing production of copper alloy and precious metal castings on the plot.

AREA: N

PERIOD: B4

A87. 500 rapidly accumulated metal working rubbish
501 casting rubbish, defining gable wall line
502 charcoal rich metal working debris
503 domestic rubbish, rapidly accumulated
504 mixed rubbish, domestic and industrial, in the gable of the building
505 post pad for gable corner
622 rubbish deposits in the northern lane
889 fills in the western boundary/drainage ditch
891 irregular row of stake holes - wind screen?
892 fence line along ditch
900 posts in gable line

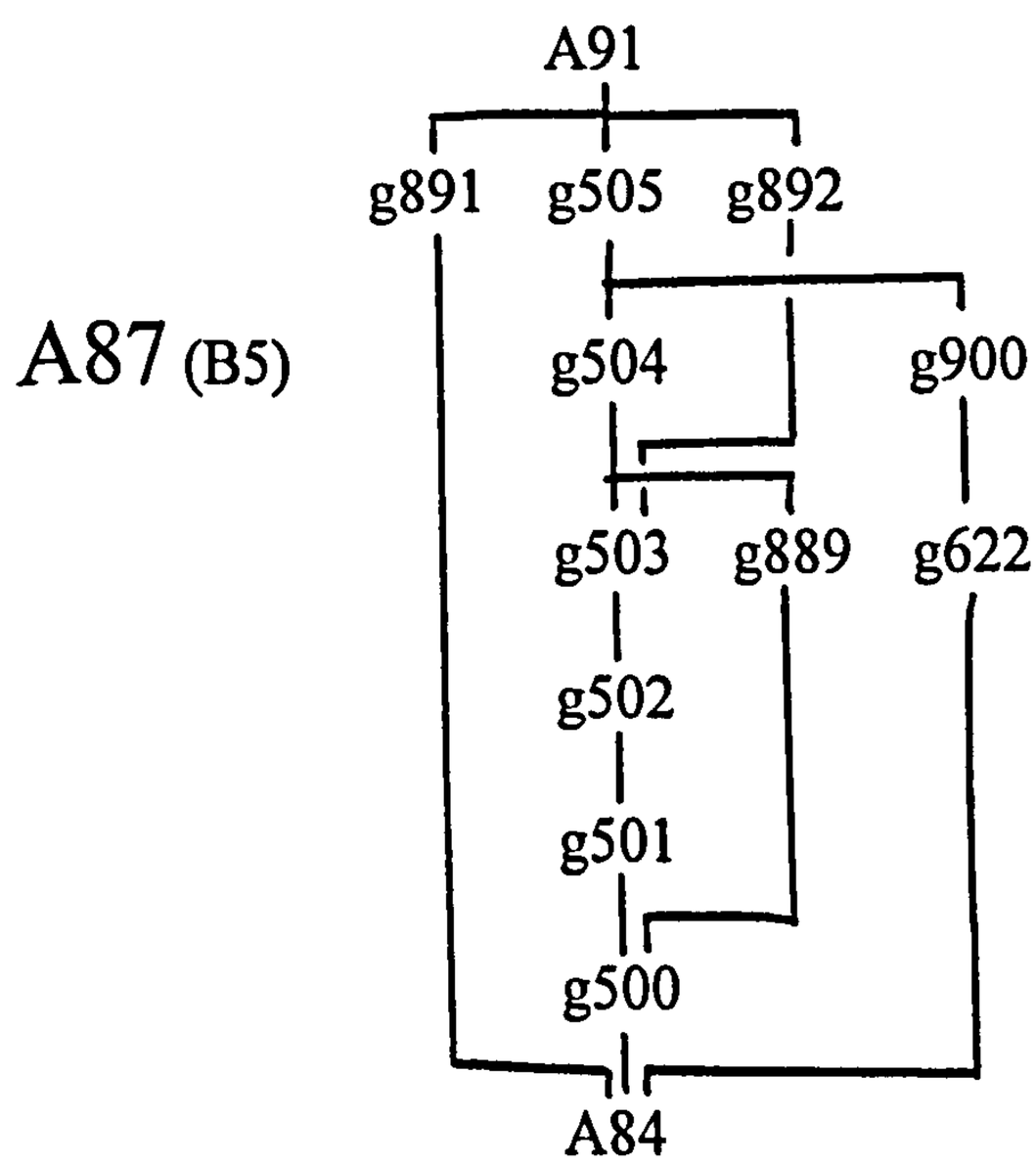

This deposit series accumulated as the result of the use of the yard surface in the area of the earlier northern building i.e. the northern part of the plot west of, and outwith, gable line A85. The western edge of the plot was defined by a NE - SW oriented ditch 0.5m wide, 0.2m deep, and with a surviving length of 4m. This extended under the north-western edge of the excavated area, and was the first of many cuts and recuts which were to define the plot boundary throughout phase B5.

The finds from this surface continued to reflect the use of the buildings on the plot for fine metal working.

AREA: N

PERIOD: B5

A88. 582 mixed rubbish layers in the workshop yard
583 wood chip layer
627 redeposited ash
628 spreads of water deposited rubbish from ditch
629 natural soil lens
718 metal working rubbish outwith the workshop
724 ash and charcoal in the western end of the workshop

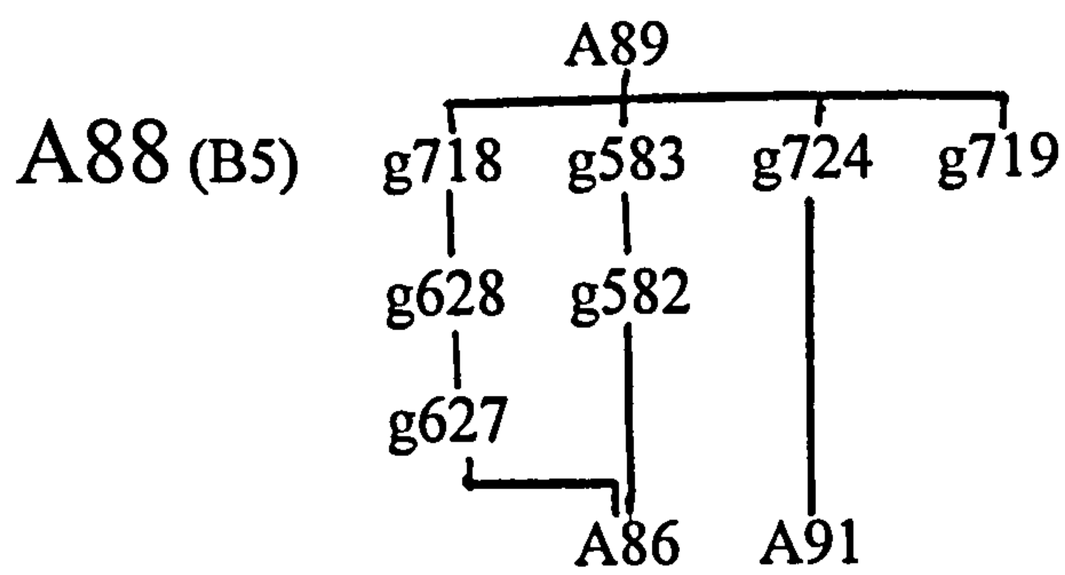

This deposit series developed as a result of the use of the shoreline yard and western workshop end, bounded to the north-east by first cut of drainage ditch A89 and to the north-west by a series of post and stake holes, also in A89. Group 724, which appeared to have respected the initial line of the ditch, was truncated on its northern edge by a later cut of the same feature. As the first cut of ditch A89 defined the substantial reorganisation of the plot represented by A87 and thus the beginning of phase B5, deposit series A88 was also phased to B5.

These deposits continued to contain large amounts of metal working waste, particularly crucibles.

AREA: N

PERIOD: B5

A89. 455 stake holes forming a diffuse right angle line on the plot boundary
581 fills in NW - SE drainage ditch
584 charred planks in ash layer
633 fill in boundary ditch
894 post and stake holes on the plot boundary

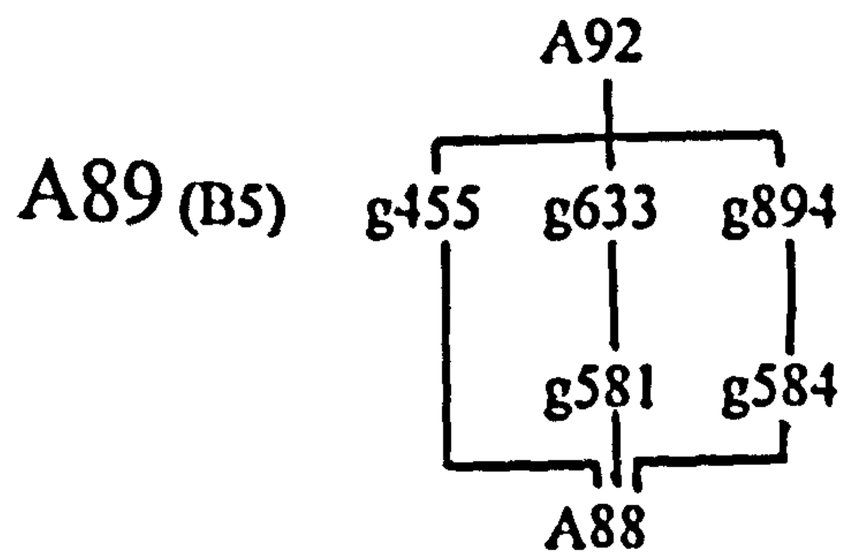

This rather amorphous deposit series consisted of a number of structural boundary features associated with the reorganisation of the plot at the start of phase B5. The stake and post holes formed a vague right angled line which met the corner of boundary and drainage ditch g633, which was contemporary with ditch g889 (A87). It is unclear whether the various groups of stake and post holes in this a-unit actually formed a part of a boundary fence line, or whether they related to structures within the southern building. Throughout phase B4 and B5, it was extremely difficult to define the position of the western wall of the southern building, and only the shifts in the character of the deposits on this area of the plot indicated that the building which was so clear in the Eastern Area continued this far westwards.

The finds from these deposits, though few, contained significant amounts of metal working debris.

AREA: N

PERIOD: B5

A90. 683 stake holes
685 spread of sill stones
686 redeposited ash layers
688 irregular row of stake holes
691 group of stake holes
708 relatively clean, redeposited charcoal - levelling
709 stake holes in a fence line
710 group of stake holes
711 redeposited ash layers
714 sill stones
720 charcoal layers on the northern plot boundary
721 stake holes and sill stones on northern plot boundary
725 pad stone for door post in gable line
727 ash deposits marking the extent of the gable line
728 stake holes in the gable line
730 stake holes in the gable line
731 stake holes
732 sill stones
733 sill stones
734 plank line and stake hole in the gable line
736 domestic rubbish layers in the northern yard
852 stake holes in the gable line
905 stake holes on the southern edge of the yard

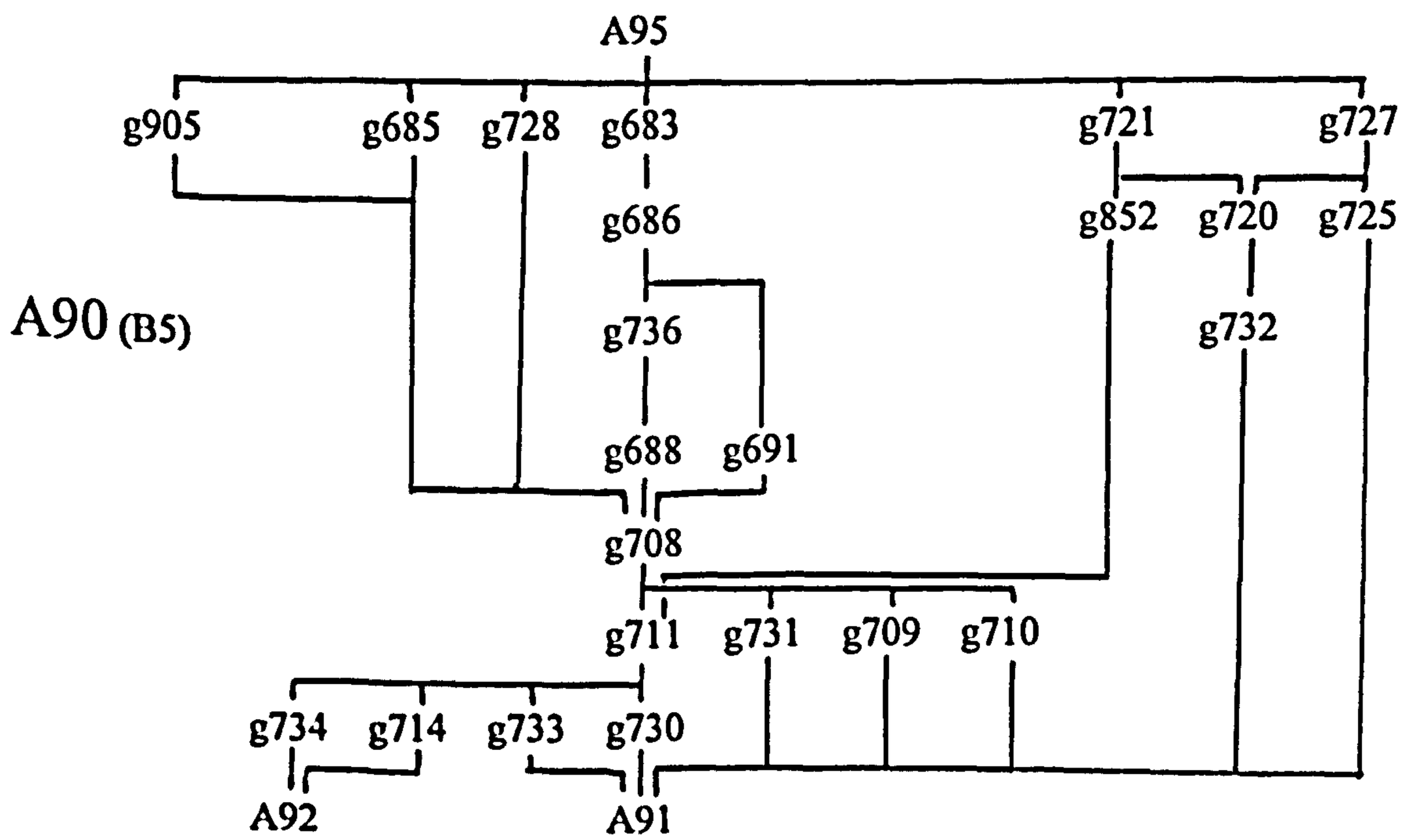

A90 was a resurfacing of the northern yard, with a new cut for the boundary and drainage ditch along the western boundary, contemporary with, and inseparable from a renovation or rebuilding of the gable line of the northern

building. It formed a total replacement of building and yard surface A87.

The yard surface was covered with thick layers of redeposited charcoal (g708 & g720), which respected the line of the drainage ditch to the south-west and did not extend into the area of the southern building or its yard. The end wall line, cut immediately to the east by Stolpe's excavations, represented a building 5m wide, with a door one metre wide in the centre of the wall. Large post holes at the northern and western corners of the building suggested that the weight of the roof was carried on the walls, as did post pad stones either side of the doorway, replacing equally large post holes. The structural evidence for this wall strongly suggested a gable of post and wattle construction.

A path, 3.5 x 1.5m, led from the door in the gable due north-west over the yard surface towards the boundary ditch. It was marked out by redeposited ash layers (g686 & g711) which were cut by groups of stake holes. The apparently untrampled surface of the ash, when taken in conjunction with the stake holes, indicated that the path was probably surfaced with some sort of wooden paving, either of wattle or planking. Concentrations of stake holes parallel with the boundary ditch, cutting the surface of the plot, indicated a fence line or other construction oriented NE - SW along the ditch.

The probability that many of these deposits were secondary was supported by their relatively low density of finds. Such finds as there were, however, indicated that the continuance of metal working on the plot.

AREA: N

PERIOD: B5

A91. 506 laminated use and occupation layers in gable line
507 eavesdrip
619 compact brown clayey silt - decayed wood chips
620 rubbish deposits in yard
621 redeposited charcoal
623 redeposited ash on the yard
624 laminated ash and charcoal in the gable line
625 spreads of rubbish on yard surface
626 ash and charcoal on yard surface
677 stake holes forming two curved lines
712 redeposited ash
713 redeposited ash
722 post and stake hole
726 post hole

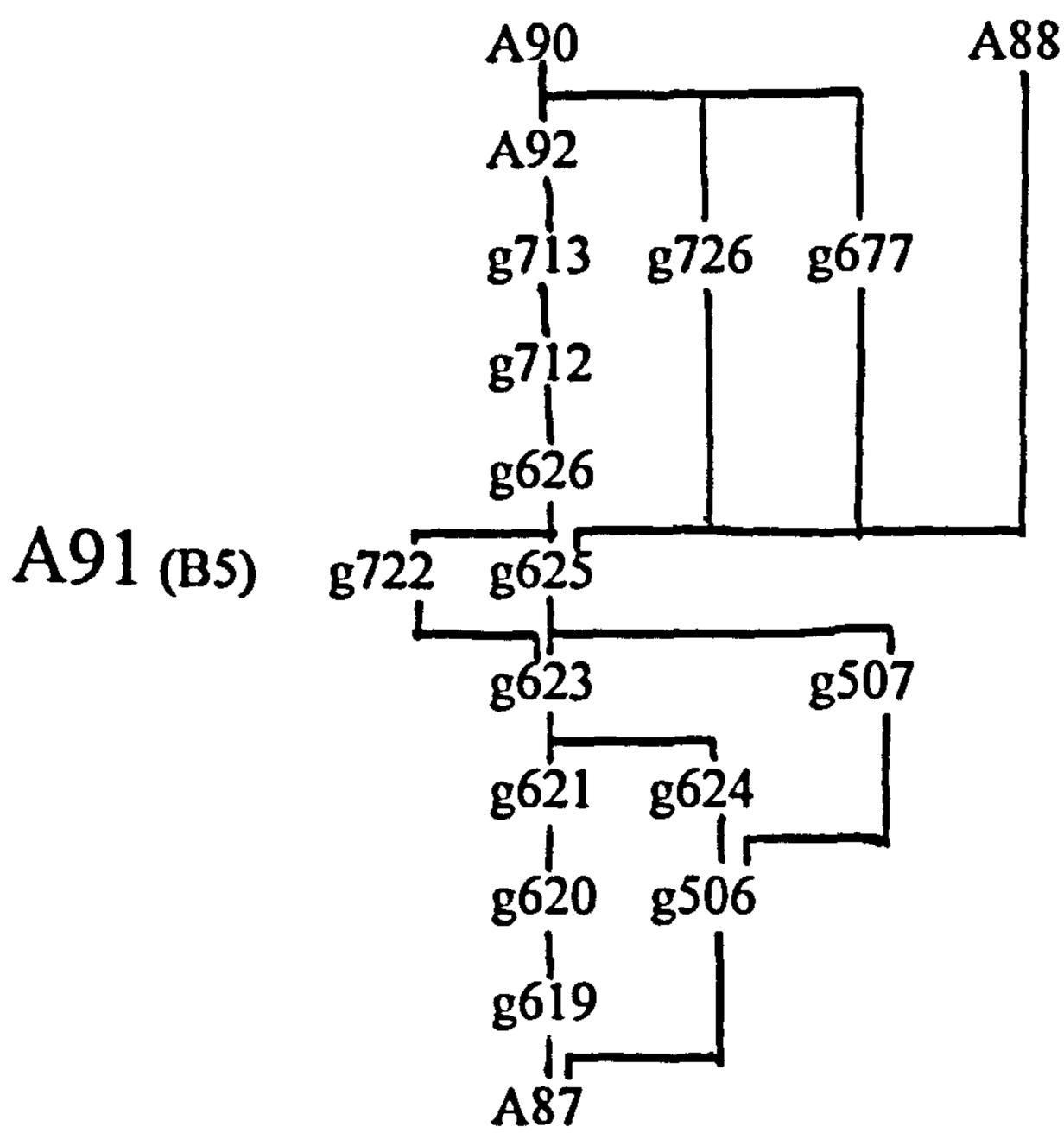

These layers formed during the use of yard surface A87, and ante-dated the resurfacing of the northern yard A90. They were truncated along part of the south-western edge of the deposit series by a cut leading south-east from the western boundary ditch. The stake holes in g677 formed two curved lines, possibly resulting from temporary stands or screens for some activity in the yard.

The finds from A91 included a mixture of domestic and industrial debris, with sufficient of the latter that it was clear that metal working continued on the plot.

AREA: N

PHASE: B5

A92. 629 possibly a natural soil
630 spreads of rubbish over the yard
631 ash, with burnt and shattered stone
632 rubbish layers
635 fills in the contemporary boundary ditch
674 stake holes in the southern building
675 stake holes in the southern building
723 rubbish layers in the northern yard
735 rubbish layers in the northern and southern yards
746 clean, confined, redeposited sand layer
818 laminated deposits within a metal workshop
847 stake holes in a small circle, covered by g746
848 rubbish and use layers in workshop building

A92 (B5)

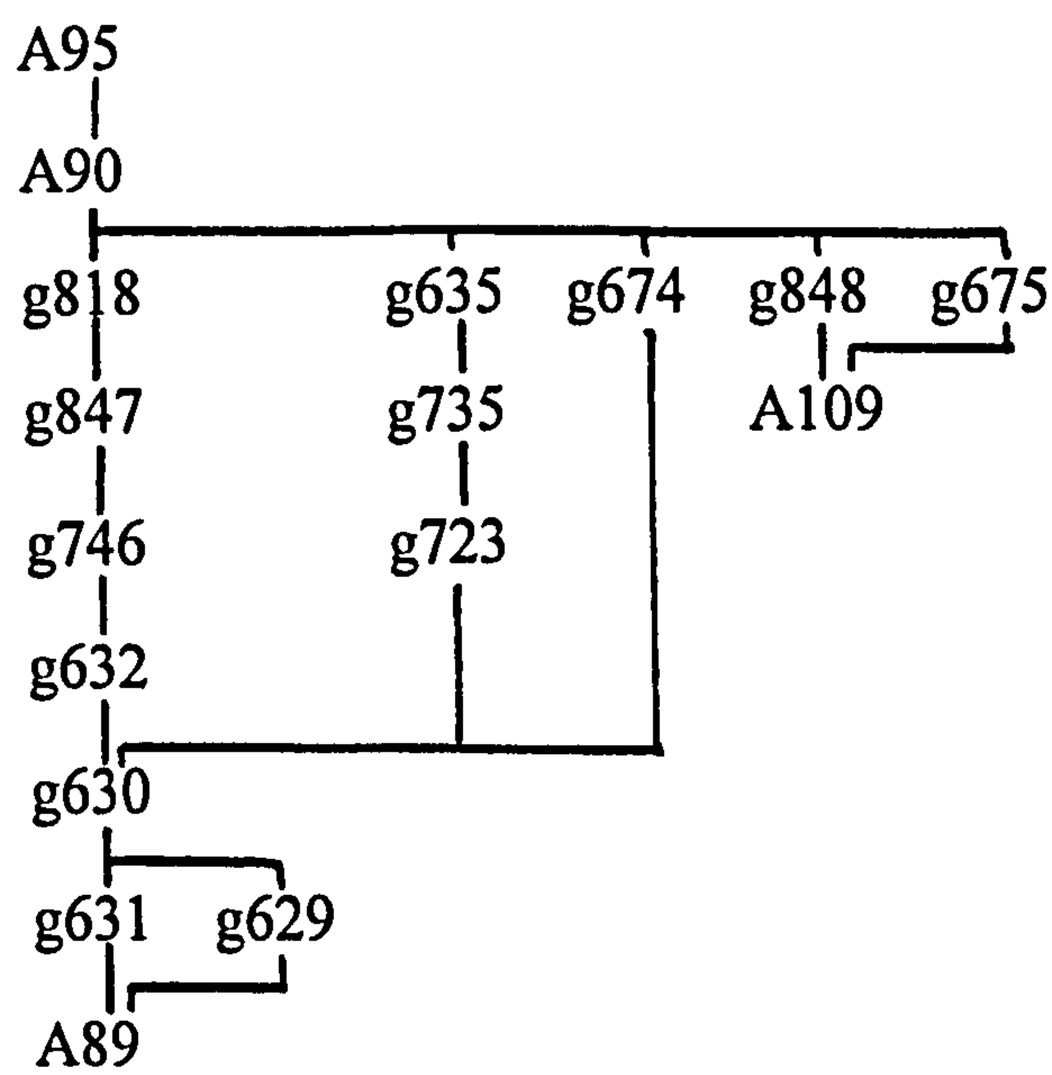

These groups represent the use of the southern building, and rubbish disposal on the plot. As was also characteristic of phase B4, it was not possible to separate out the use of the southern building, and the rubbish layers which extended westwards from the building onto the plot. This deposit series also included the layers of domestic and industrial debris which built up over the truncation horizon of A91, north of the drainage ditch, on the northern yard. The whole was linked stratigraphically by fills in the drainage and boundary ditch (g635).

These deposits contained noticeable concentrations of crucibles.

AREA: N

PHASE: B5

A93. 634 domestic rubbish deposits
682 redeposited ash layers
717 sill beam and sill stones
719 occupation layers within building
729 stake holes
842 stake holes forming fence/wall line

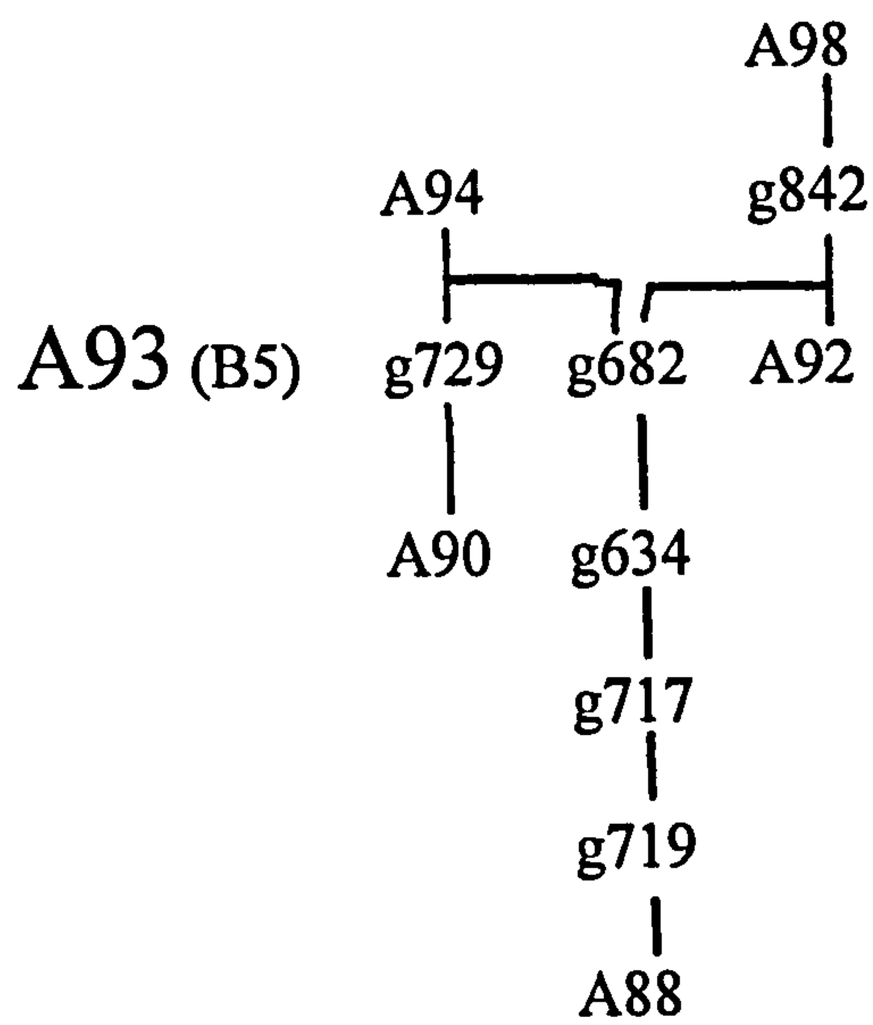

This deposit series represented the remains of the southern corner of a building, otherwise outwith the excavated area, which extended into the excavation by less than one metre. It respected the line of the western boundary ditch in A87, which presumably paralleled the line of its south-eastern wall. This was the earliest evidence for the existence of another plot to the west of the excavated area, in what had previously been open area or shoreline.

The south-western wall of this building was of a sill stone and sill beam construction (g717), and 0.5m south-west of this, a stake hole fence line (g842) marked the south-western boundary of this plot. Importantly, this fence line joined the right angled corner of the western boundary and drainage ditch, indicating that when the northern plot was reorganised, either these constructions were contemporary, or the new, western plot was laid out in relation to the existing plot boundaries.

The implications of the creation of this new plot to the west are important. It provided the stimulus for the reorganisation of the northern plot which was evident from A87 onwards; the northern plot lost land which it had previously built over, and it seems most likely that this change was externally imposed.

AREA: N

PHASE: B5

A94. 681 redeposited ash layers
716 rubbish deposits from the use of the building
854 redeposited grey green clay
855 redeposited ash layers
856 sill stones for wall line
857 redeposited ash respecting g856
858 layers of mixed domestic and industrial rubbish
903 stake holes forming fence/wall line
904 small post holes north of g903

A94 (B5)

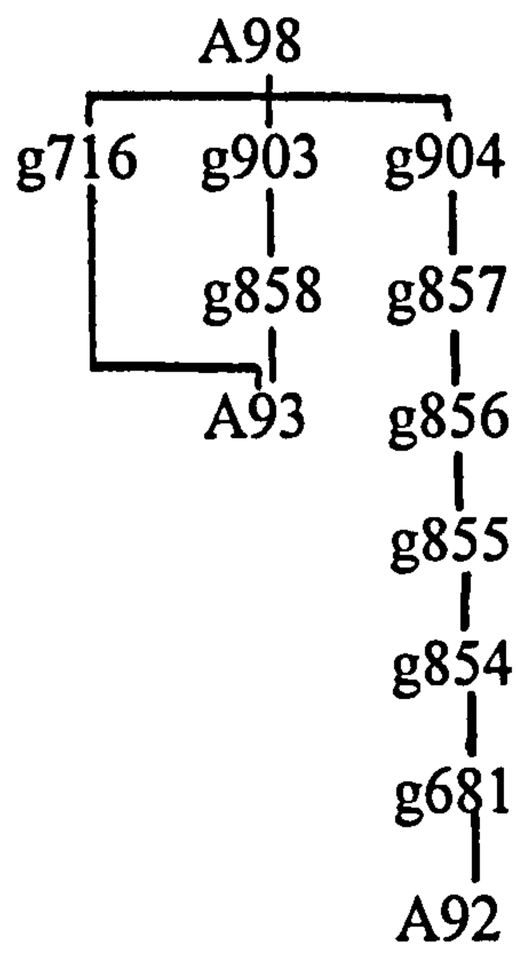

This deposit series resulted from the reconstruction, use and destruction of a building on the western plot, overlying building A93, and respecting the boundary ditch immediately to its east. The pattern established in A93, of a wall line, with a fence line 0.5m to the south-west, continued. The fence line (g903) was again of wattle, while the wall line (g856 and g904) was of sill stones and small posts, which presumably supported panelling of wattle or planking. South-west of the fenceline lay deposits of rubbish (g716) which were contemporary with the use of the building, and which continued to respect the plot boundary evident in A88.

Finds from the building itself were few, and showed no evidence of metalworking.

AREA: N

PERIOD: B5

A95. 636 redeposited ash along the northern fence line
637 working surface with slag and other metal debris
684 clearance from hearth
689 rubbish layers
690 redeposited ash and charcoal used as yard surface
692 ditch fills
707 hearth clearance, mostly charcoal, with burnt stone
853 rubbish layers in the northern lane

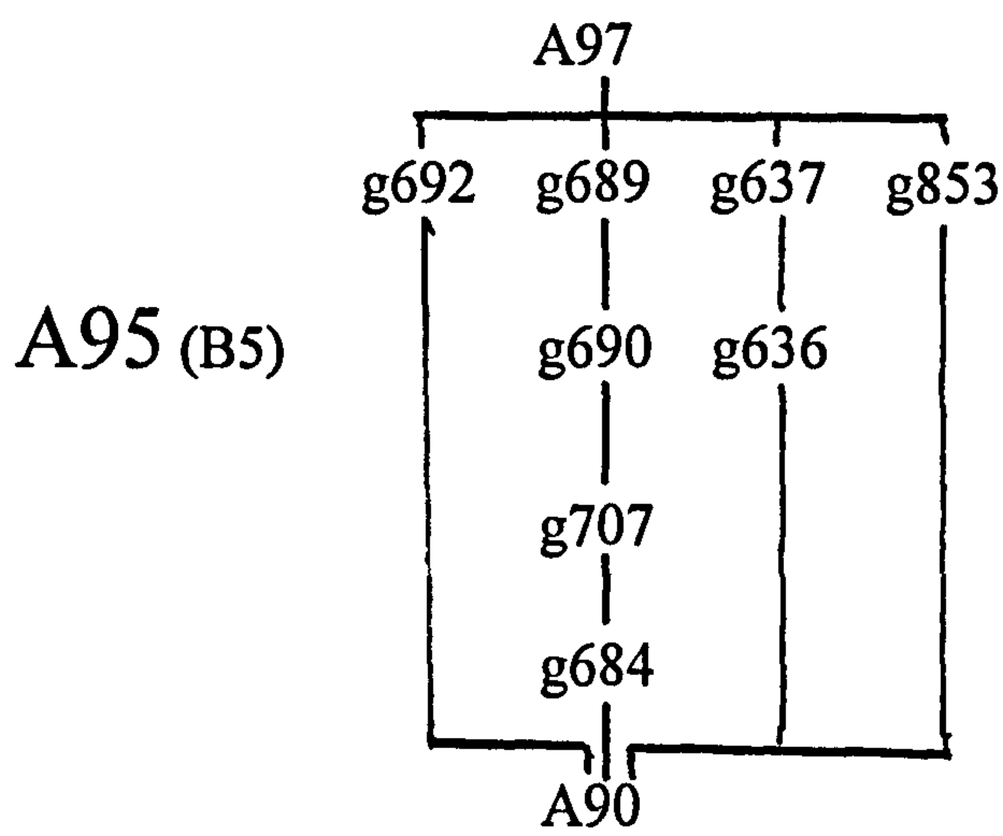

These extensive rubbish deposits built up over the surface of the northern yard on the northern plot (A90), and derived from the use of the building whose gable line survived in that deposit series. Associated with them were fills in the western boundary ditch (g692), and diffuse rubbish layers extending from the southern building on the plot, over the eastern end of the drainage and boundary ditch, and onto the northern yard.

The absolute amounts of metal working debris in these deposits were greatly reduced, although the presence of slag, scrap metal and crucible sherds mad it evident that metal working continued on the plot.

AREA: N

PERIOD: B5

A96. 693 truncation of layers on plot
694 fill and levelling of redeposited ash and clay
695 stake holes
696 stake holes
697 use and occupation deposits
698 laminated ash layers
699 laminated ash and charcoal
700 stake and post hole
701 stake holes
715 ash layers - clearance from hearth
811 rubbish/fill deposit
845 rubbish deposits
846 stake holes
859 rubbish deposits on the northern edge of the southern building
860 redeposited charcoal
861 stone packing
862 rubbish layers
890 stake holes
901 stake holes in the northern wall line
902 stake holes in a wall line

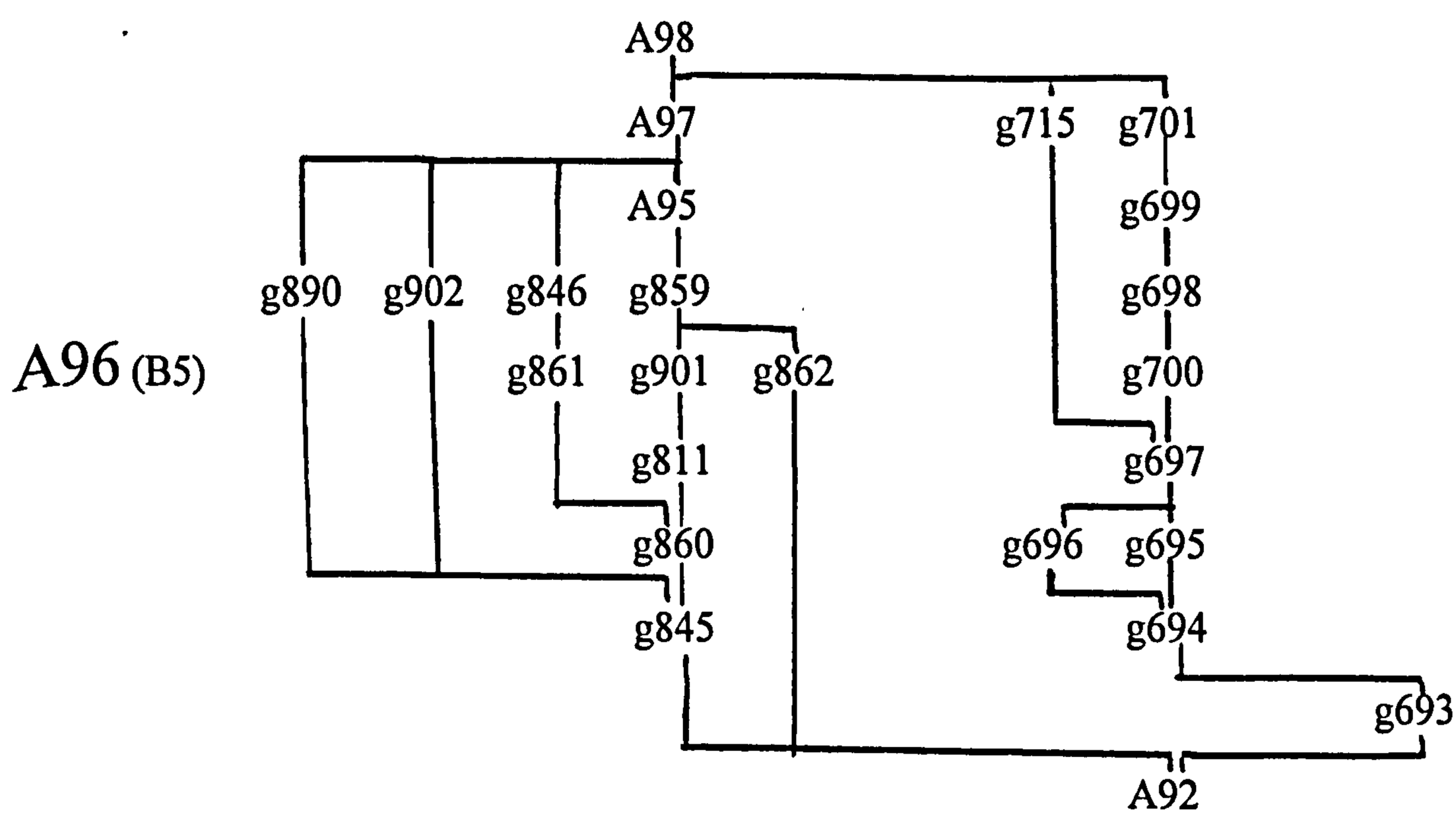

These groups accumulated as the result of the use of the southern building as a workshop, and the use of a confined yard directly to the west of the west end of this building. For the first time during phase B4 and B5, it was possible to tell with a reasonable degree of certainty where the western end wall of the southern building lay. It was marked by groups of stake holes (g890, g901, g902) which formed an irregular wattle line oriented NE - SW, which was respected with more or less precision by the use and rubbish layers which accumulated within and outside the building.

The area to the west of the building contained a rectangular feature (g693), which was filled with laminated deposits of sand and ash. It appears to have formed some sort of casting box, or other feature associated with metal working, which continued during this use of the plot. All the deposits in this area were confined and respected a boundary which formed a continuation of the line of the boundary ditch north of this area, and the southern lane, south-west of this area. Although no evidence survived for a fence line here, the persistent limitation of rubbish and use deposits west of the southern building strongly suggested that such existed.

AREA: N

PERIOD: B5

A97. 595 stone packing
596 stone packing
638 redeposited ash
639 redeposited charcoal
640 slightly laminated redeposited ash
658 stake holes
678 pad stones for door posts
702 stake holes
703 stake holes
704 stake holes
706 fill/levelling of redeposited ash
737 stake holes in gable line

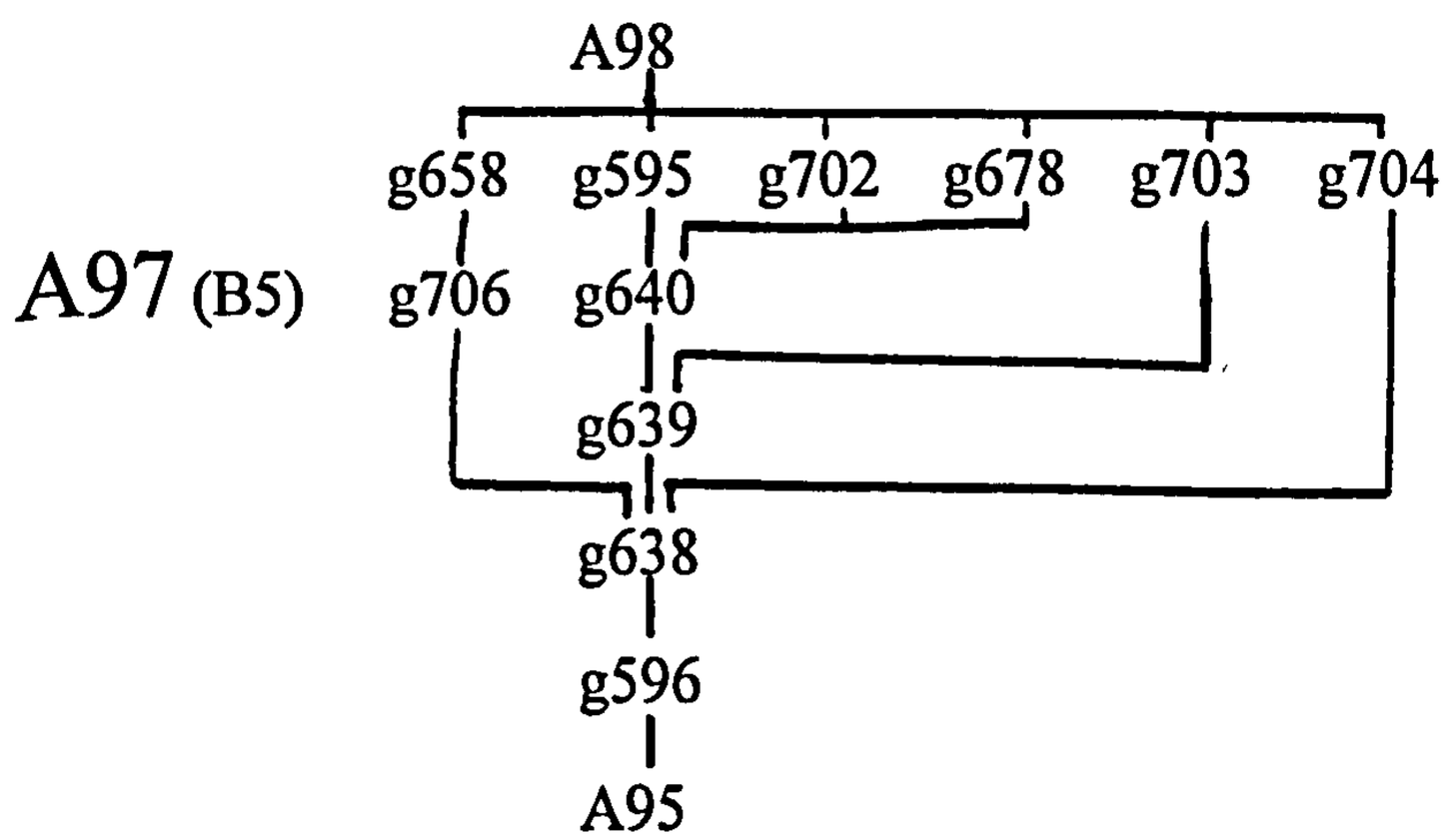

These grouped formed the use and destruction of deposit series A95, and the latest occupation of the building whose gable line was directly parallel with the western edge of Stolpe's excavations, first constructed in deposit series A91. It was the latest occupation on the northern part of the plot during phase B5.

A97 consisted of a series of ash and charcoal layers over the surface of the northern yard (g638, g639, g640, g708), and the structural elements which made up the latest of the renovations of the gable line itself.

The finds from the deposits, though relatively few in number, included scrap bronze, crucibles, and moulds, indicating that metal working continued in this area up to the latest occupation of this building.

AREA: N

PERIOD: B5

A98. 641 extensive spreads of rubbish, mostly domestic
705 ash, charcoal, domestic rubbish
738 ash, charcoal, fired clay
739 extensive spreads of domestic rubbish
740 redeposited ash

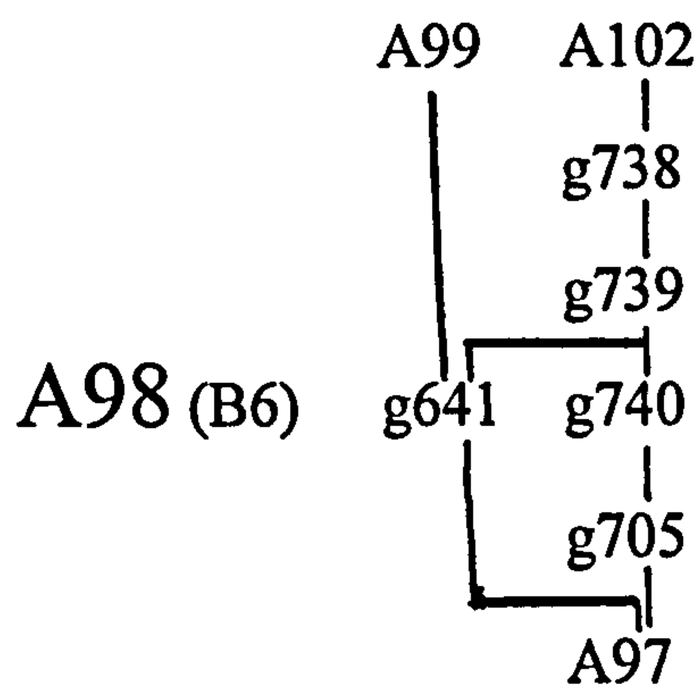

A98 signalled a significant change in both the use and the organisation of the northern plot. These extensive, redeposited domestic rubbish spreads covered the whole of the northern part of the plot, and clearly built up during a period of low use or abandonment. They extended over the line of the western plot boundary without break, and also over the line of the northern plot boundary into the northern lane.

The lack of lamination of these groups of layers indicated a rapid rate of accumulation, as did the relatively large and unfragmented nature of the finds from the deposits. Only a tiny amount of metal working debris was found in A98, and it seemed likely that this was residual. No individual group of finds was particularly dominant, and it is probable that the plot surface was used for rubbish dumping from a variety of sources, probably from all the surrounding plots. The presence of pieces of cullet and relatively numerous beads was interesting in the light of the possible evidence for glass working on the southern plot during this phase (see A49, A50 and A51).

AREA: N

PERIOD: B6

A99. 642 redeposited ash on yard surface
644 redeposited ash and charcoal
645 in situ ash and charcoal
646 stake hole
844 redeposited ash and charcoal
907 post and stake holes

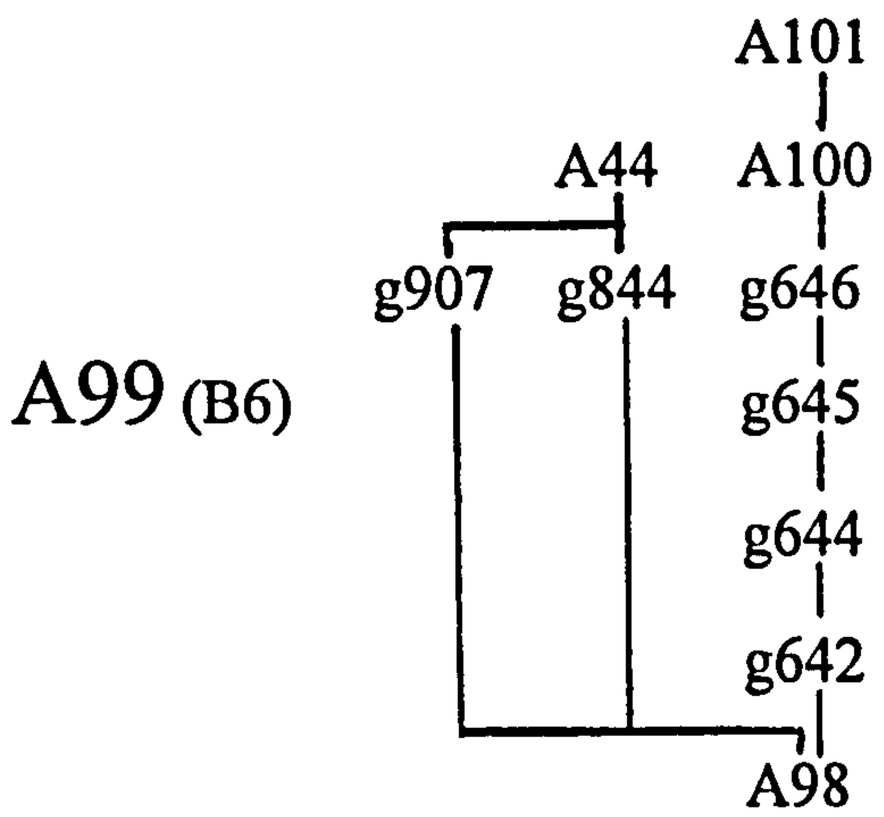

A99 resulted from the use of a small building on the southern part of the plot. The extent of this building was indicated only by a degree of lamination in the rubbish deposits which was noticeably greater than the surrounding area, and by a diffuse spread of stake holes. The material evidence for the nature of the construction of this building was so slight that no useful deductions could be drawn from it. Two post holes (g907) to the south-west of the traces of the building could have been in its south-eastern wall line, but could also have been a part of a fence line marking the southern plot boundary by the southern lane.

The finds from this ephemeral structure included only small amounts of probably residual metal working debris, and it seemed unlikely that this building had functioned as a workshop. There were, however, large amounts of coprolites from within the structure, and it is possible that it may have been either an animal pen, or a latrine.

AREA: N

PERIOD: B6

A100.647 fill/surfacing layer of wood chips, much decayed
648 redeposited ash
651 stake holes and post holes
679 stake holes
680 rubbish layers
744 structural details N. long wall
906 stake holes in the southern long wall

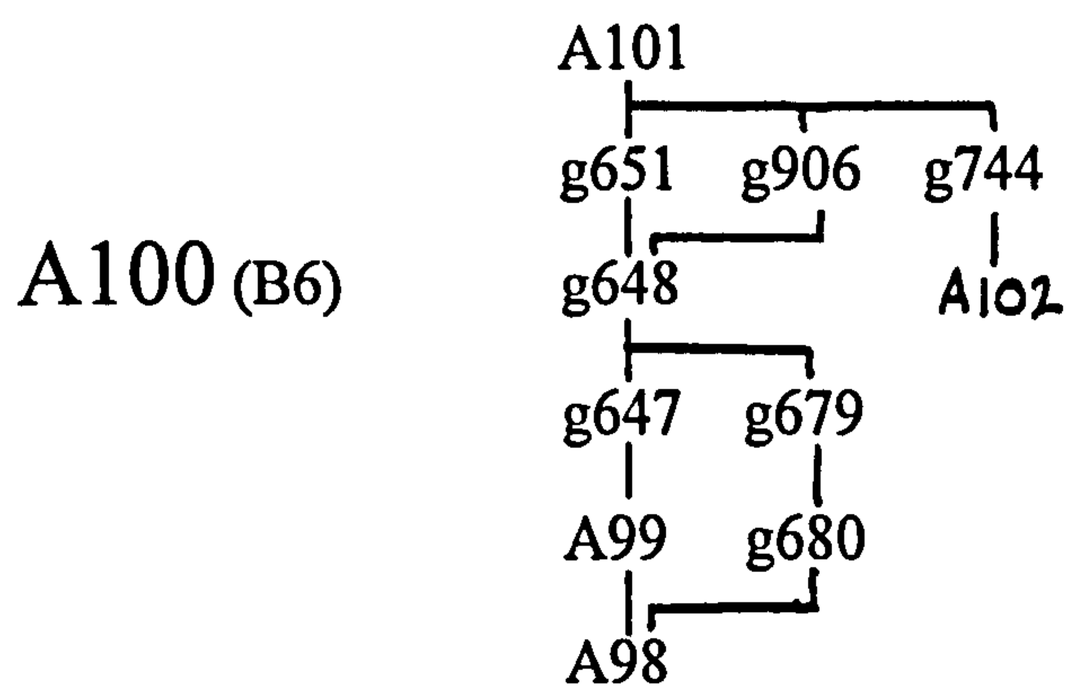

This deposit series resulted from the construction of a new building on northern part of plot, with the rubbish deposits contemporary with its use. This building had a western end wall which lay one metre west of the earlier gable line on this part of the plot (see A97 & A90). This wall was marked by stake and post holes (g651) which suggested that it was of post and wattle construction. It may have had a door, slightly north of the central axis of the building, where two large post holes framed an apparent one metre gap in the wall line. Small post and stake holes also lay in the southern and northern wall lines.

It is important to note that this building, although no more ephemeral than the majority of earlier and later buildings on the northern part of the plot, was not occupied for very long, and indeed contained no clear 'occupation' layers of the characteristic finely laminated ash and charcoal with small fragmented finds. A100 appears to have gone out of use almost immediately after its construction, when the entire plot was covered by rubbish layers (A101).

The finds from this deposit series gave no clear evidence for the function of this building. The very small amounts of metal working debris in A100 were residual.

AREA: N

PERIOD: B6

A101.649 spreads of domestic rubbish
650 redeposited wood ash
652 domestic rubbish, with dung and coprolites
653 redeposited ash and charcoal, with domestic rubbish
745 domestic rubbish
747 extensive rubbish layers
748 redeposited ash
833 fill and rubbish layers on the northern part of the plot
836 domestic rubbish in the northern lane

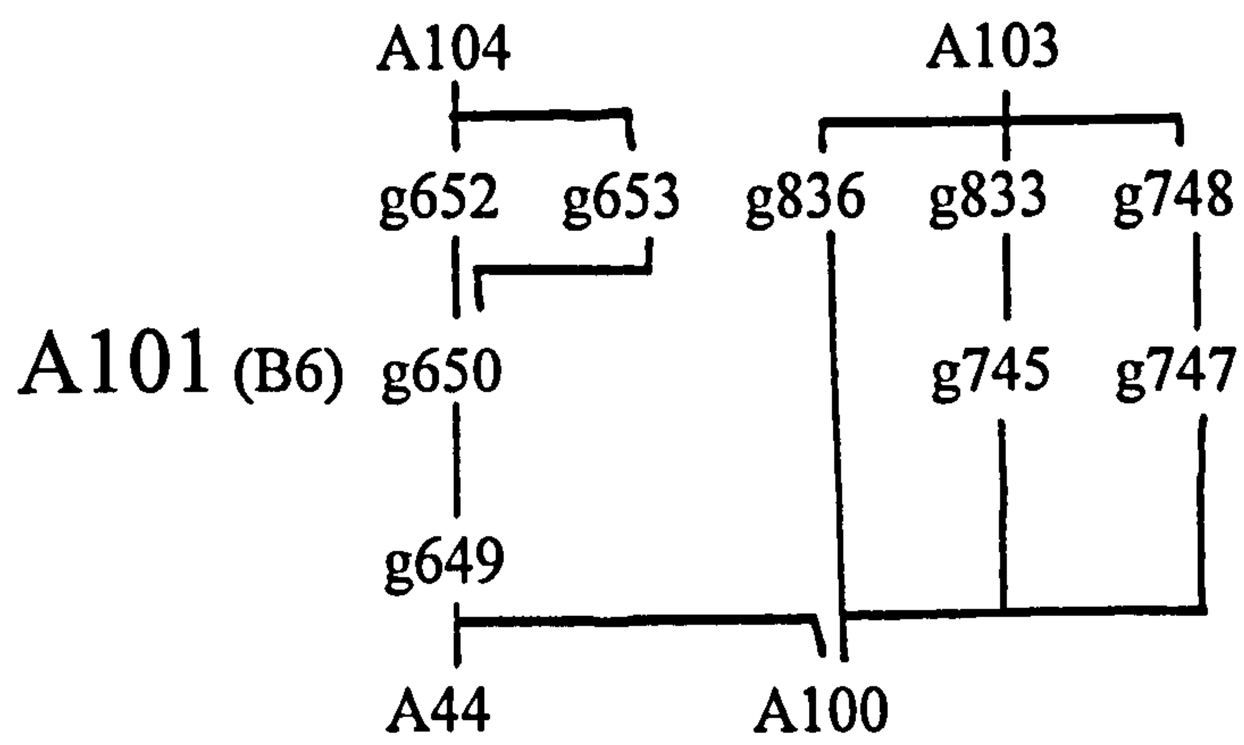

A101 consisted of extensive layers of redeposited domestic rubbish, which covered the whole of the northern plot, and extended into the northern lane. Over the northern part of the plot, these layers represented a complete abandonment of the short-lived building constructed in deposit series A100.

In the southern part of the plot, although no structural evidence survived, a slight, rectangular 'ghost' of a building 3.5m wide, with a surviving length of 2.5m was cut away at its eastern end by Stolpe's excavations. The western end of this building extended into the 1990 trial trench, where a single post hole (1990 A34) marked its end wall. This appears to be the continuation of the ephemeral structure first recorded in A99, which was interpreted as alternatively a latrine or an animal pen.

AREA: N

PERIOD: B6

A102. 741 fence line on the northern plot boundary
742 rubbish in the northern lane
743 rubbish in the northern lane

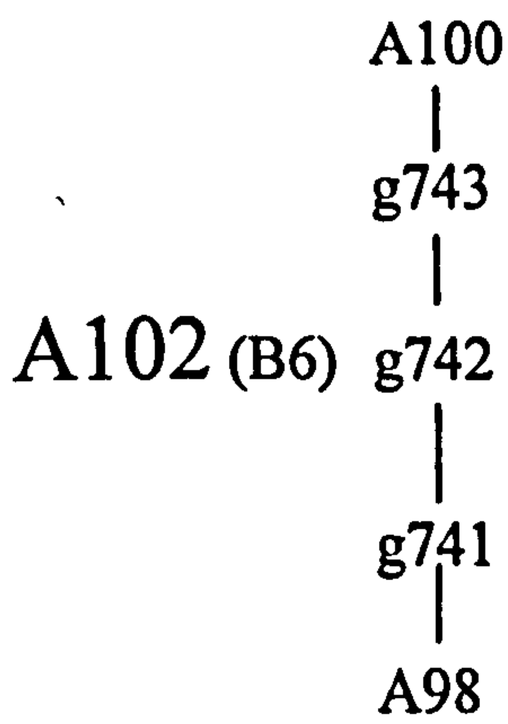

A102 consisted of the rubbish deposits which accumulated in the northern lane contemporary with a northern plot boundary fence (g741), which was itself contemporary with the slight building and use of the plot for rubbish dumping in deposit series A99. The finds from these layers contained very small residual amounts of metal working debris, mixed with large amounts of domestic rubbish.

AREA: N

PERIOD: B6

A103.749 diffuse spread of stake holes
750 sill stones
751 layers accumulated inside building
752 stake holes
753 possibly levelling or burning of building
754 stake holes in the southern wall line
758 ash deposits in the wall line of the building
778 'occupation' layers and clearance from a hearth
830 redeposited ash layers
834 laminated ash and charcoal layers
835 floor of redeposited clay
863 lense of green, redeposited clay

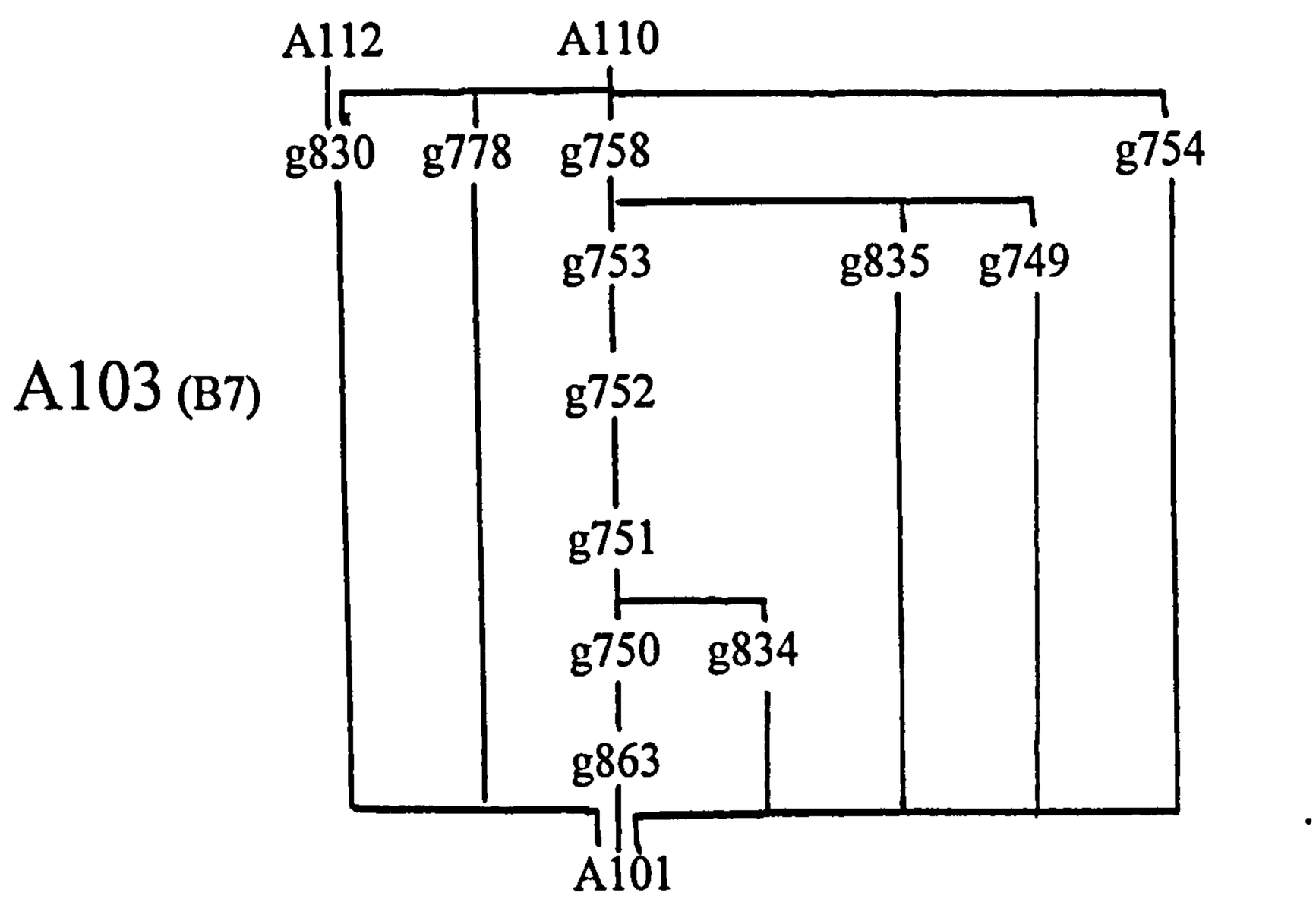

Deposit series A103 marked the reconstruction and use of a building on the northern part of plot. The hearth for this building was not within the excavated area, and the structural evidence for the building was slight. However, the spreads of redeposited clay flooring (g835 and g863), sill stones (g750) and the nature of the deposits within the building, which were compact and laminated (g751 and g834), made it clear that a building had stood on this site. Its dimensions were not possible to determine with any accuracy.

The stake holes (g752 and g754) were widely spread, and gave no real structural evidence about the building, although it was stratigraphically clear that they came from A103.

The finds from these deposits gave no evidence about the function of the building. It was not, however, used for metal working.

AREA: N

PERIOD: B7

A104.654 a line of stakes oriented NW - SE
655 a series of small ash and charcoal layers, hearth clearance
656 stake holes
657 stake holes
806 clearance and use layers associated with hearth
837 occupation and, possibly, fill layers
838 hearth remains redeposited as a levelling
839 post/stake holes in end wall
840 stake holes forming a short line within the building
841 clearance from hearth g838
850 hearth clearance deposits

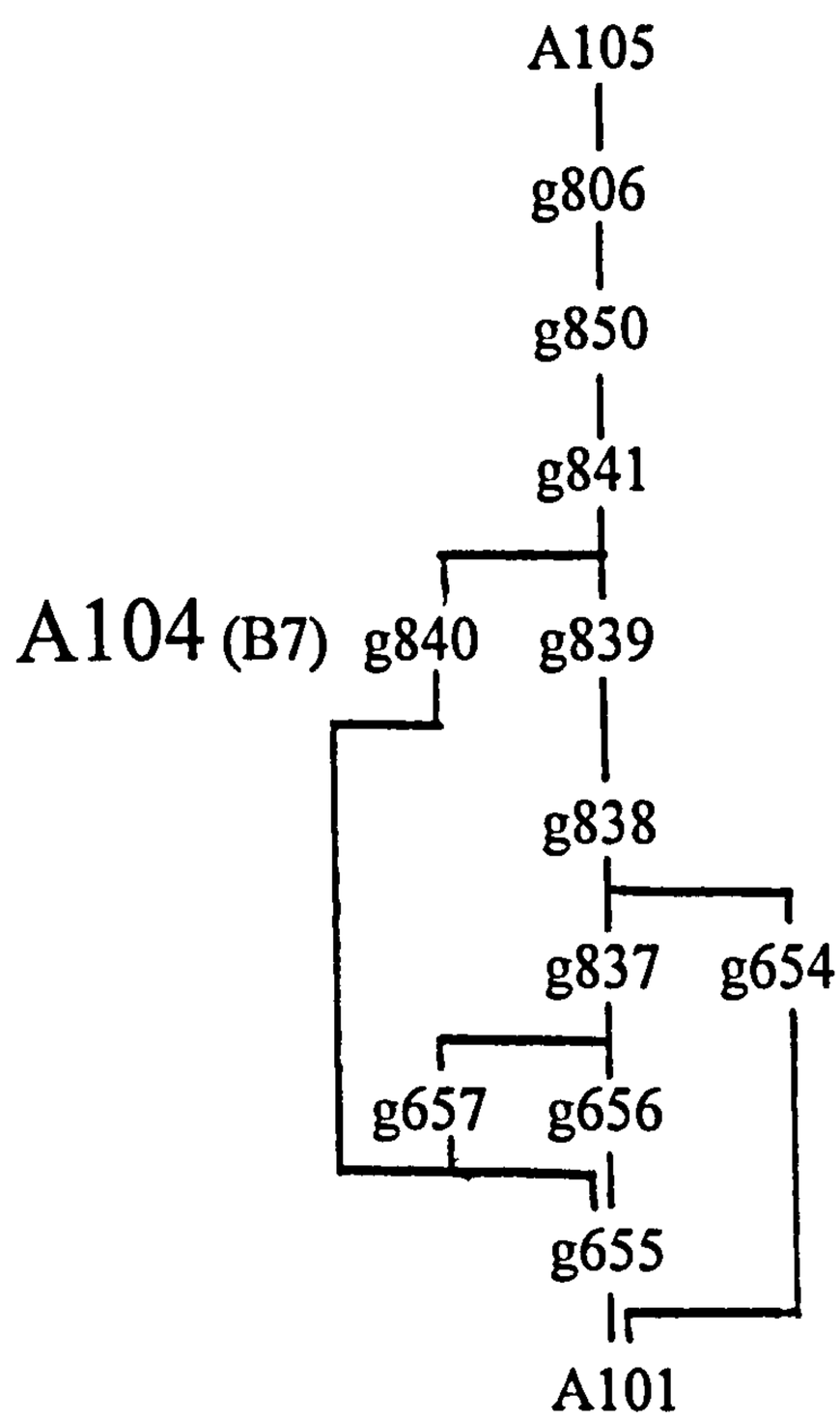

Deposit series A104 represented the construction and use of a building on the southern part of the plot, parallel with A103. The north-eastern wall of the building was cut away by an intrusive foundation trench from an overlying structure, and the south-western wall line was marked by limited spreads of ash and charcoal. The highly laminated nature of groups 655 and 806, and the presence of the damaged and levelled hearth g838, made it clear that this was a roofed building, despite the lack of structural evidence.

The north-western end of this building extended into the area of the 1990 trial trench, and its south-eastern end was

cut away by Stolpe's excavations. Its surviving width appeared to be c. 3.5m, although the vagueness of the south-western wall line made it difficult to judge.

The finds from these deposits did not clarify the issue of the function of this building. Its flimsy nature, small size, and the accumulation of ash and charcoal layers within it suggest that it may possibly have been some sort of workshop, rather than a domestic building, but this conclusion is, and must remain, extremely tentative.

AREA: N

PERIOD: B7

A105.789 construction of hearth, 0.75m wide, 1.3m long,
790 clearance from hearth g789, in situ
791 clearance and floor deposits related to use of g789
807 use and clearance deposits associated with g789
808 post and stake holes
809 ash spreads, probably redeposited
820 'occupation' layers
821 remains of a floor layer
851 post and stake hole in wall line
919 stake holes in the southern wall line and adjacent internal structures

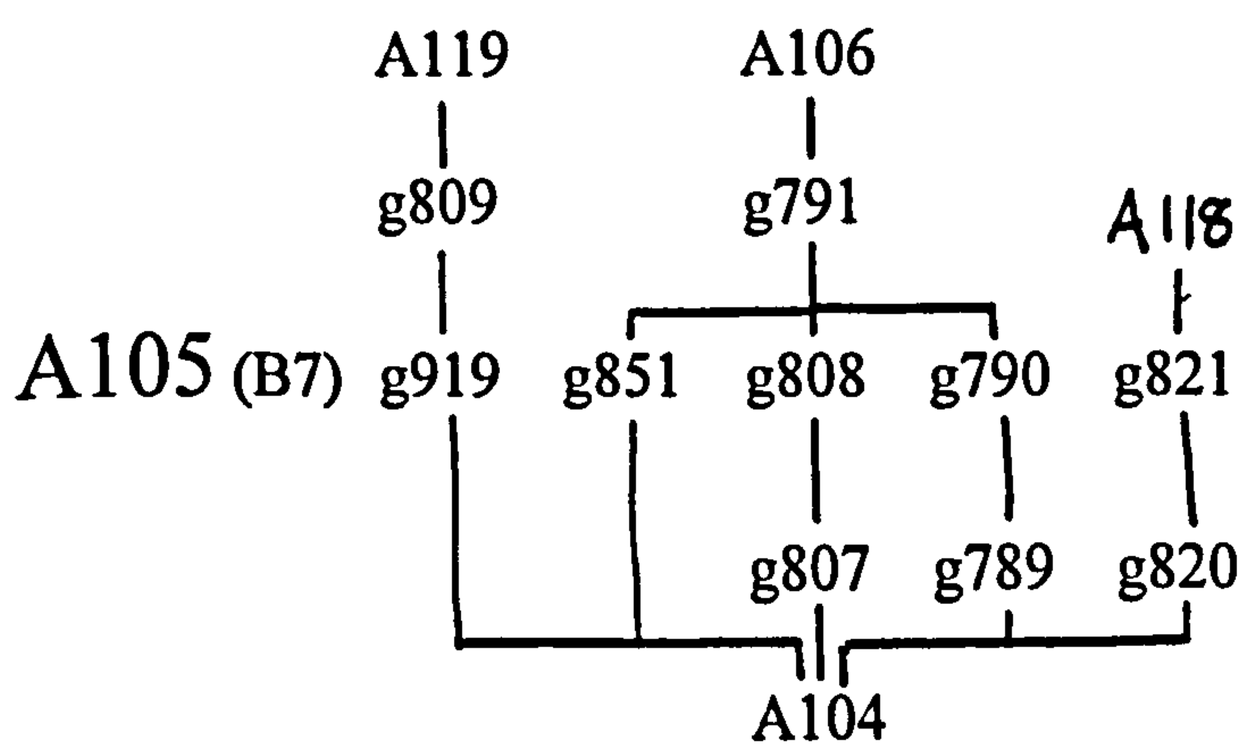

In deposit series A105, there was substantial structural evidence of a renovation of the building A104 on the southern part of the plot, and its use.

A large hearth (g789) was constructed in the centre of the building, midway between a south-western wall line of post and stake construction (g919) and a north-eastern wall line which was cut away by the same intrusive foundation trench from the overlying phase B8. The area around the hearth was covered with laminated ash and charcoal layers deriving from the use of the hearth. These respected the surviving south-western wall.

Group 919, which formed the south-western wall line, consisted of two diffuse rows of posts, 0.5m apart. It is possible to interpret this building as a 'Hedeby' type house, with a weak, non-load-bearing wall and external supporting posts; however, the evidence is insufficiently detailed to distinguish between this, or a wall line with associated internal features such as a wall bench. This area of the building was damaged by subsidence over the underlying foundation stones of the first and second jetties (A107 and A21).

The surviving dimensions of the building were 5m wide, by 2.5m long. At the north-western end, it extended into the area of the 1990 trial trench, and at the south-eastern end, into the area of Stolpe's excavations.

There were remarkably few finds from this building, and they offered no real help in interpreting its function. The large size and very heat damaged state of the hearth tentatively suggests an industrial process rather than purely domestic use.

AREA: N

PERIOD: B7

A106.792 rebuild/repair of hearth
793 hearth construction/reconstruction.
794 clearance layers relating to the use of g793
795 use of hearth g793
796 fill layers over hearth g792

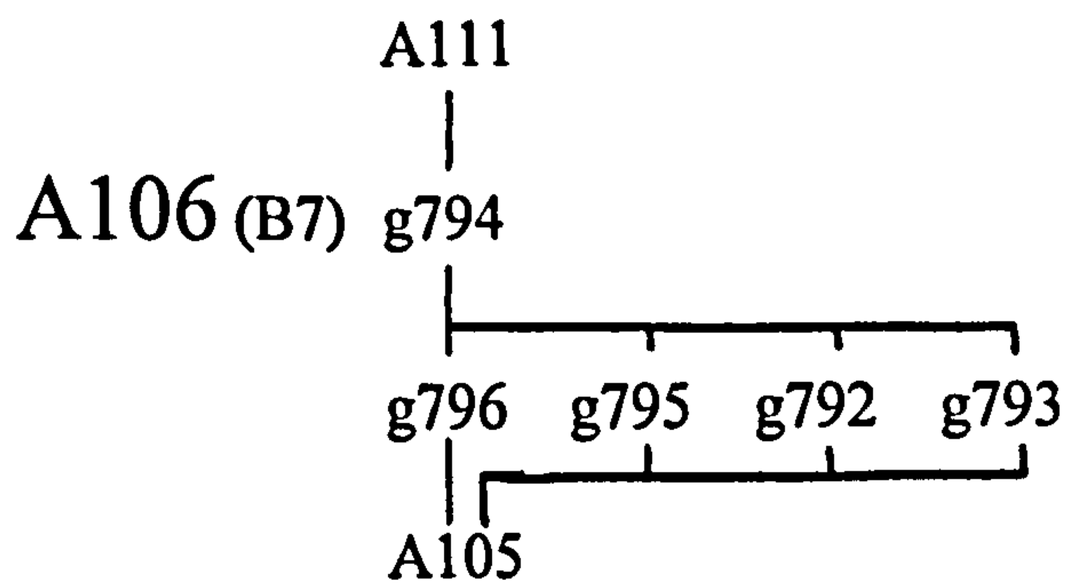

Deposit series A106 was a renovation and reuse of building A104/105 on the southern part of the plot. It accumulated within the wall lines established in A105, and consisted of a reconstruction (g792 and g793) of the central hearth and the deposits relating to its use.

The reconstructed hearth had a large, fire cracked stone set at its north-western end. This formed a feature of all the reconstructions of this hearth, and was interpreted as a bellows' support. The hearth was very damaged by heat, and the clay and stone foundation had been fired until it disintegrated, suggesting high temperatures and much use of the structure. This impression of heavy use was supported by the extensive layers of laminated ash and charcoal (g794) which had resulted from the use of g793. It is probable that this hearth had an industrial function.

Finds from A106 were, again, remarkably few. There is no evidence for the nature of the use of the building apart from the unusual size and structure of the hearth.

AREA: N

PERIOD: B7

A107.345 post and stake holes, and sill line
597 rubbish deposits, under the second jetty foundation
598 burnt material lying over the stones of the first jetty
599 deposits of primarily domestic rubbish
600 construction of jetty foundation

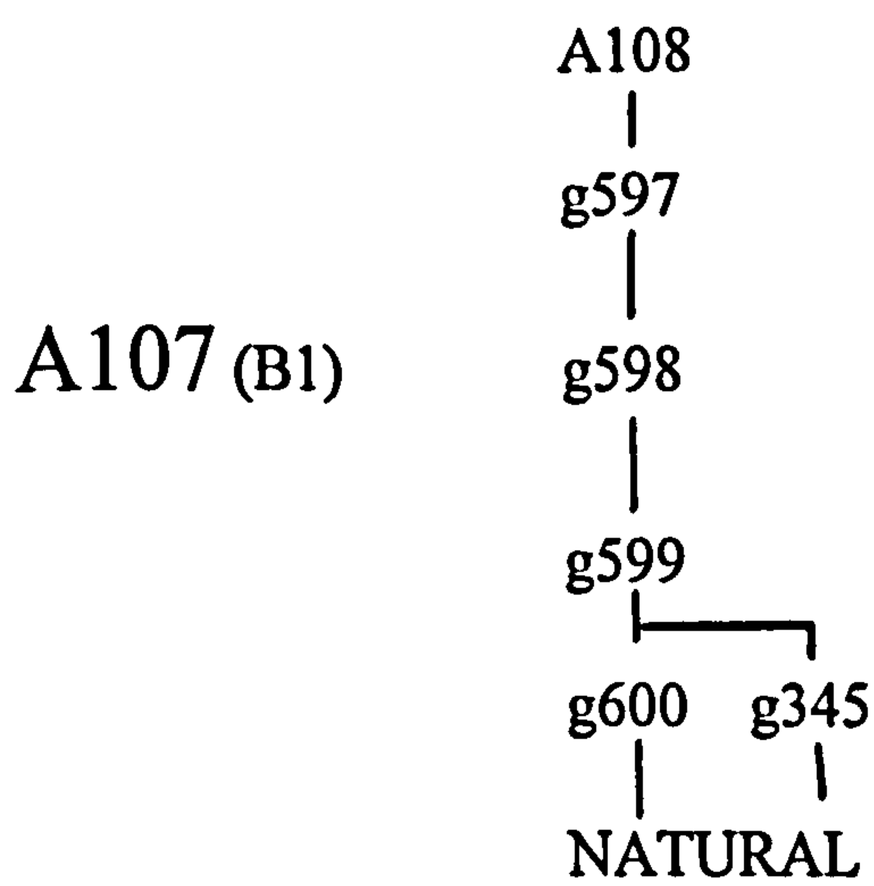

Deposit series A107 consisted of those contexts which were associated with the construction of the first jetty on the site, and its use.

The jetty foundation consisted of a T-shaped stone setting of massive stones up to two metres in diameter. The frame formed by these stones was filled with stones very little smaller, and it was bounded to the north-east by a line of post and stake holes which indicated that the whole had been covered by a timber superstructure. North-west of this structure, in the area which was underwater at the time that the foundation was built, a group of post and stake holes (g880) indicated the maximum extension of the timber structure three metres from the foundation.

The length of the jetty foundation, NW - SE, was 8.5m, in total 11.5m with the timber superstructure, and its width was 4m, with another 0.5m unexcavated to the south-west.

AREA: N & E

PERIOD: B1

A108.601 rubbish layers over the area of the jetty
602 extremely loose, slumped and subsided rubbish
604 isolated small layers of varying types of rubbish

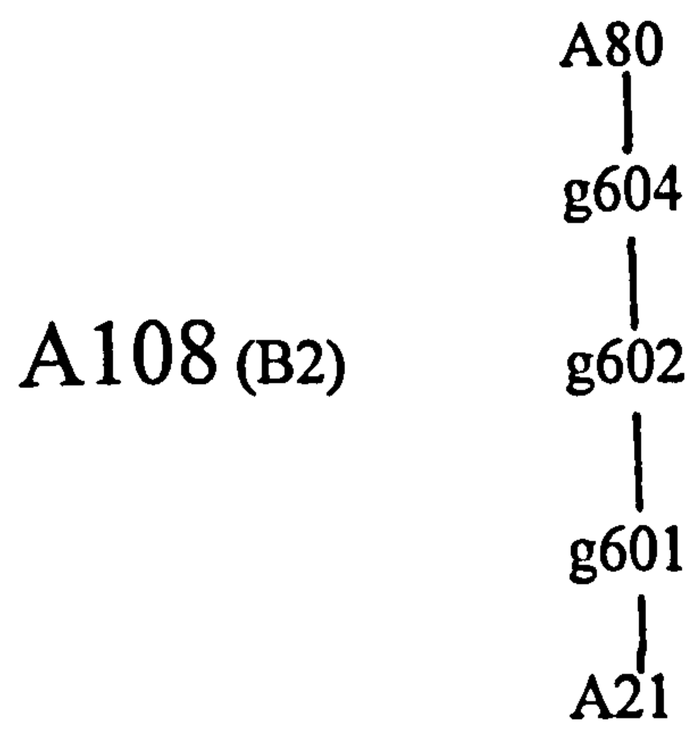

These exceedingly slumped and disturbed rubbish layers were bounded to the north, south and west by the stones of the second jetty foundation (A21), and were cut to the east by the edge of Stolpe's excavations, i.e. the edge of the Eastern Area.

The stratigraphic relationships of the deposits were very unclear; the soil was very loose and freely draining, and the collapse of the wooden superstructure of the jetty had almost completely isolated these deposits from those surrounding. A108 was therefore phased to B2 on the basis that, although it may have contained material deriving from the use of the first jetty (A107), it certainly also contained material from the use of the second jetty, and the two could not be securely distinguished.

A108 contained substantial amounts of metal working debris, in the form of moulds and crucibles.

AREA: N

PERIOD: B2

A109.603 rubbish layers in the southern lane
605 rubbish deposits in the southern lane
606 rubbish layers lying over and around the foundation stones of the two jetties
607 rubbish deposits in the southern lane

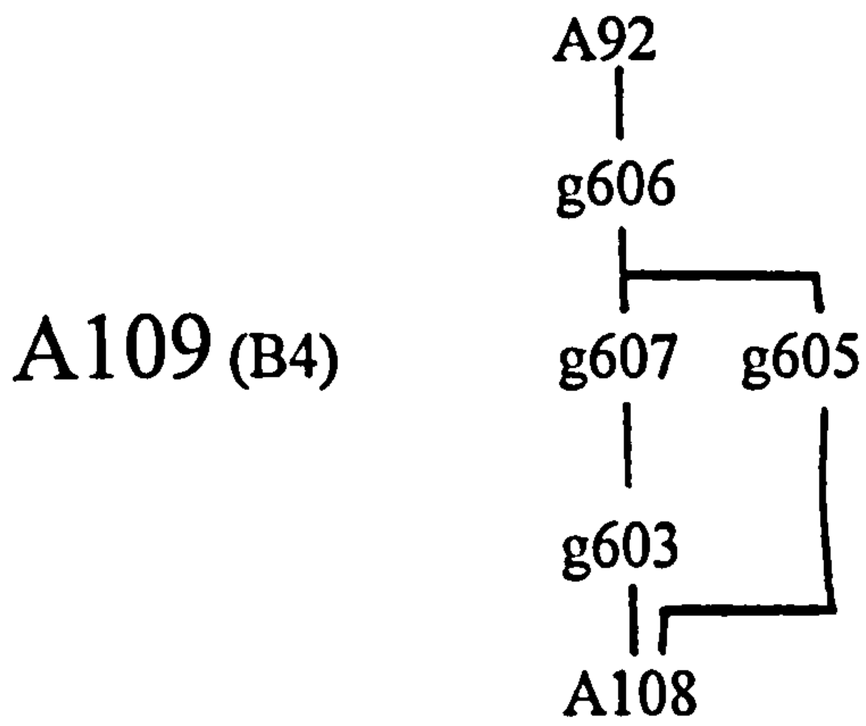

These rubbish deposits in the southern lane, post-dated the use of both jetties (A107 & A21), and extended over the northern edge of the second jetty foundation into the area of the southern boundary of the northern plot. The deposit series is stratigraphically linked to the use of the northern plot, and contains significant amounts of metal working waste, including crucibles, metal droplets, and a small amount of hack silver.

AREA: N

PERIOD: B4

A110.755 three stake holes on the southern edge of the yard
756 'occupation' layers
757 stone packings along the northern fence line
759 spreads of domestic rubbish through an opening in the fence line
827 layers relating to fill and resurfacing of the yard
829 charred planking - the remains of a fence line (with g757)
831 occupation layers inside the yard
832 redeposited clay layer
909 stake holes in the northern fence line
910 stake holes in the northern fence line

A110 (B7)

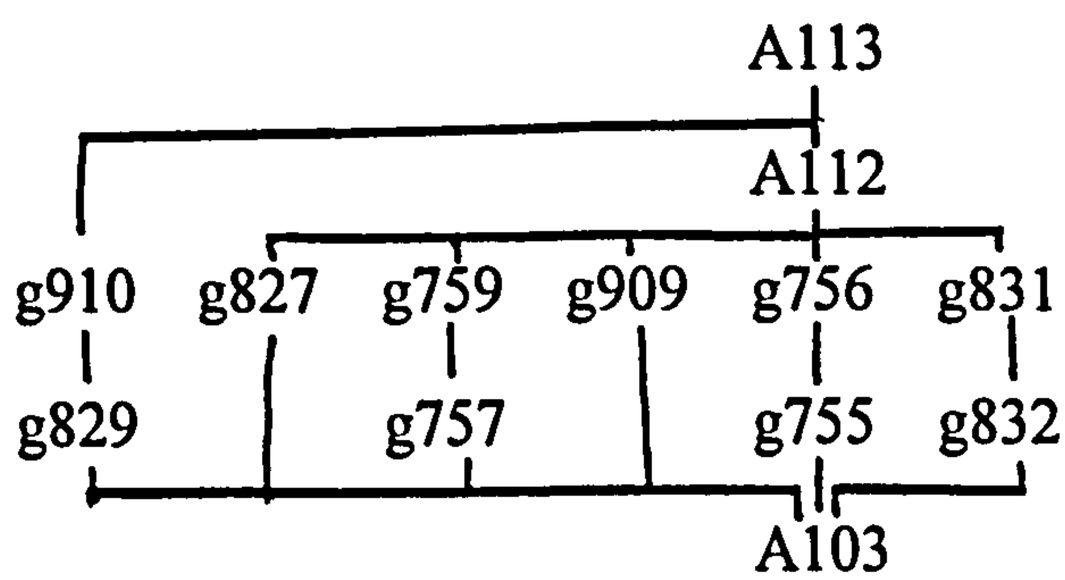

It is not entirely clear whether A110 represented a new building on the northern part of the plot, or whether it was merely a comprehensive reconstruction of a yard surface in this area. However, given the combination of redeposited clay layers, sill stones and stake holes in the area of the wall lines, it was interpreted during excavation as a building. This interpretation had to be reassessed during post-excavation analysis in the light of the structure of the succeeding deposit series A112, which was clearly an open area, but incorporated many of the structural elements of A110. It was concluded that it was most probable that A110 represented the remains of a yard on the northern part of the plot.

There was no hearth within the excavated area. The northern fence line of the yard was marked by sill stones (g757), which resepected the position of an opening with a single worn stone forming a post pad on the northern side (g759). The eastern edge of this gate or entrance was cut away by Stolpe's excavations, but its surviving width was one metre, and it was probably never much wider. Diffuse spreads of stake holes around the northern wall line were difficult to interpret, but clearly related to the position of a fence or wall.

The surviving width of the yard (taken from the south-western edge of g756 to the north-eastern edge of g757) was at least 5.2m. Nothing can be said about its length.

AREA: N

PERIOD: B7

A111.797 construction/repair of hearth
798 use and clearance layers associated with the hearth
799 sill stones packed into a rectangular cut

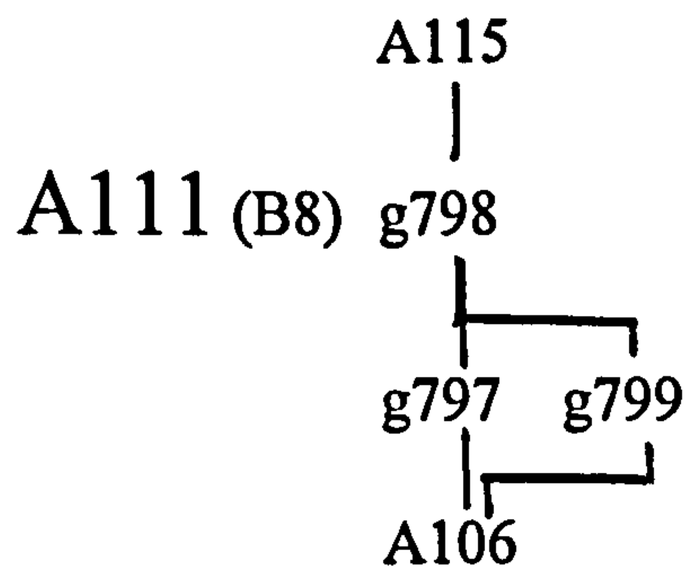

These groups resulted from the renovation of the southern building on the plot, and its use. The northern wall of A111 was founded on sill stones packed in a rectangular trench filled with redeposited ash (S1026, g799)and cut away most of the underlying evidence for the northern walls of the southern buildings in phase B7. This wall line was extremely substantial, and it is unclear why there was no correspondingly load bearing wall on the southern edge of the building. Group 799 formed a sufficiently marked structural change in the organisation of the plot that it was used to define the start of a new phase, despite the fact that the hearth in this building (g797) was on the same site as that in the underlying building (g793, A106).

The finds from this building were generally unremarkable, and gave little immediate help in defining its use. The finds from g799, however, were curious in the extreme. At the bottom of the cut of the foundation trench, an oxbow, the shoulder blade of a strongly built man, and the wings of an eider duck had been laid. In the fill of redeposited ash and small stones, two intact, so-called 'cult rings' were found (F43283, F43284) with broken pieces of two more (F43424, F43286). The deposit series as a whole was given a terminus post quem by a clipped Abbasid dirham of Madinat Al Salam, dated to AD 807-8 (F43422) also from S1026 (g799). Given the unusual finds from g799, it is difficult to avoid interpreting this as a feature with a function both practical and ritual; the commonest, though not the only, context for iron cult rings is in burials.

AREA: N

PERIOD: B8

A112.760 domestic rubbish thrown out into the northern lane
761 redeposited ash layer, levelling for construction of path
762 domestic rubbish in the northern lane
776 the remains of a cobbled path across the yard
777 redeposited ash and charcoal layers
779 domestic rubbish deposits in the yard
780 domestic rubbish deposits in the yard
781 domestic rubbish deposits in the yard
782 domestic rubbish deposits in the yard
783 redeposited ash layers, levelling for construction of path
825 paved path oriented N-S across the plot
826 redeposited ash layers lying under g825, filling for its construction
828 post hole and associated packing in northern fence line

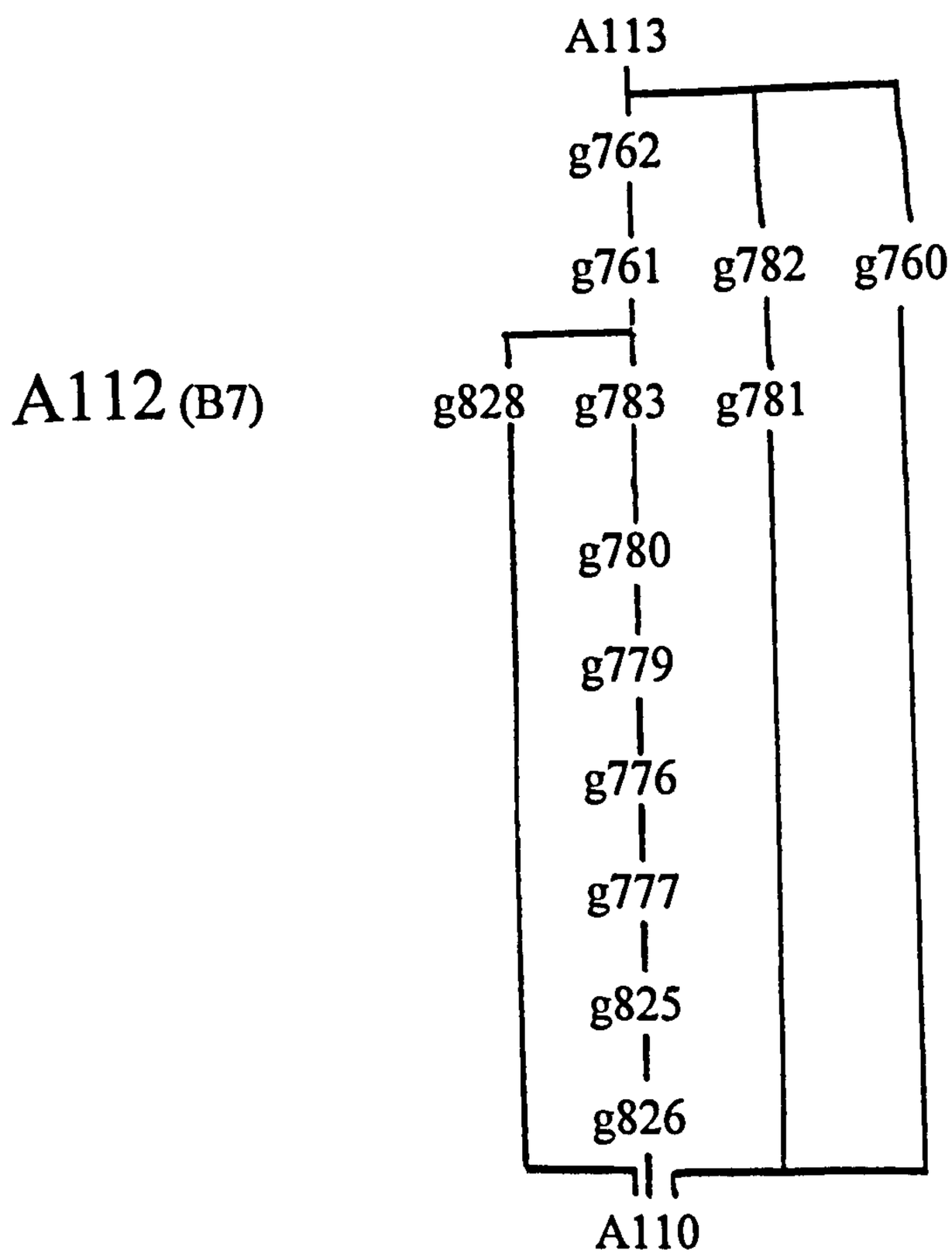

This deposit series derived from the renovation and use of the yard surface A110, and the northern lane. A cobbled path (g776), 0.5-0.75m wide, was laid across the yard, oriented due north-south. This led from the northern wall of the contemporary building on the southern part of the plot (A105/106) to the northern lane. The sill stones and stake holes which marked the edge of the plot in A110

persisted into this period of use, but an opening in the northern fence line at the northern edge of the site is implied by the orientation of the path. The path was founded on redeposited ash (g783 & g761), a pattern paralleled in the earlier yard surfacing A90.

Finds from A112 indcluded a broken or clipped Abbasid dirham (F42975)dated to AD 803-4, but were in no other way remarkable.

AREA: N

PERIOD: B7

A113.763 domestic rubbish on the edge of the northern lane
764 domestic rubbish in the northern wall line
775 rubbish deposits within a building
908 centre posts
911 wall line on northern plot boundary with centre posts for building, and stone threshold s1075
914 post and stakes in southern wall line

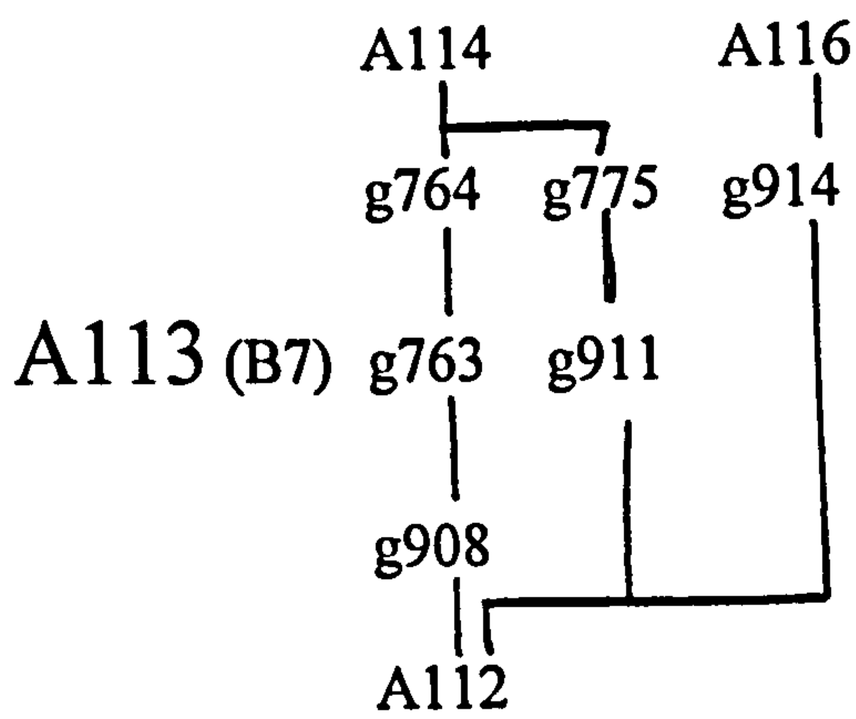

A113 was the fragmentary remains of a building on the northern part of the plot. Its northern wall line was formed by a group of very large post holes cut through the prexisting sill stones of A113 with a door in the wall line marked by three worn stones forming a threshold. This opening was on the same point as the gate into the yard A110, making the structural evidence for this building more than a little ambiguous.

There was no hearth in the excavated area, and the interpretation of this deposit series as a building rather than a yard was based on the massive size of the posts along the northern wall line, and the presence of a double post hole 2m south of them (g908), presumed to be a load bearing post in an internal wall. The fragmentary and inconclusive nature of the evidence for the northern building on the plot throughout phase B7 made the interpretation of these structures difficult. Deposits within the area of the presumed building were more laminated and fragmented than those which were in the northern lane, but the damage to the stratigraphy by Stolpe's excavations to the east, and by natural processes of compression and dehydration exacerbated the problems of interpretation.

The stake holes in the southern wall line (g914) were relatively detached from the remainder of the deposit series, and could possibly have formed part of the northern wall of the southern building A105 or A106. The stratigraphic relationships between the northern and

southern parts of the plot were cut away by the foundation trench of the northern wall of southern building A116 (g799). The group was placed in A113 because its stratigraphic relations with the northern deposit series were much clearer, and it was demonstrably earlier than deposit series A116.

AREA: N

PERIOD: B7

A114.765 domestic rubbish deposits in the northern lane
766 domestic rubbish deposits in the northern lane,
771 domestic rubbish layers in the northern lane
772 domestic rubbish deposits

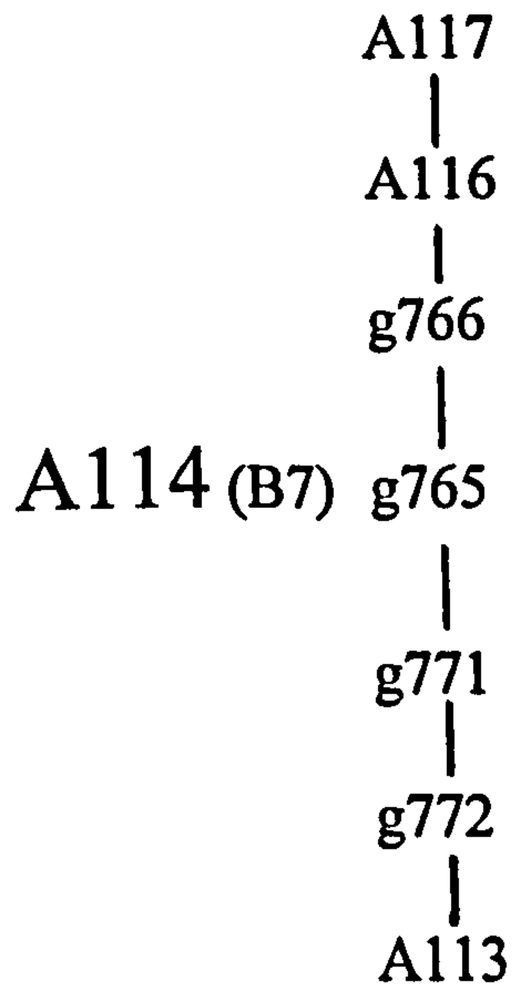

These fills and rubbish layers in the northern lane were contemporary with the use of yard or building A113. They contained particularly large amounts of horn and antler working waste in g766 (S775) (F41216, F41217, F45047, F68672, F68673, F68688, etc.) but given the limits of the excavated area, it is not clear whether this derived from the excavated plot, or another in the vicinity; there were, however, no corresponding concentrations of antler working debris on the northern plot.

AREA: N

PERIOD: B7

A115.800 clearance and use layers associated with hearth g801
801 reconstruction/repair of hearth
802 use and clearance layers associated with hearth g801

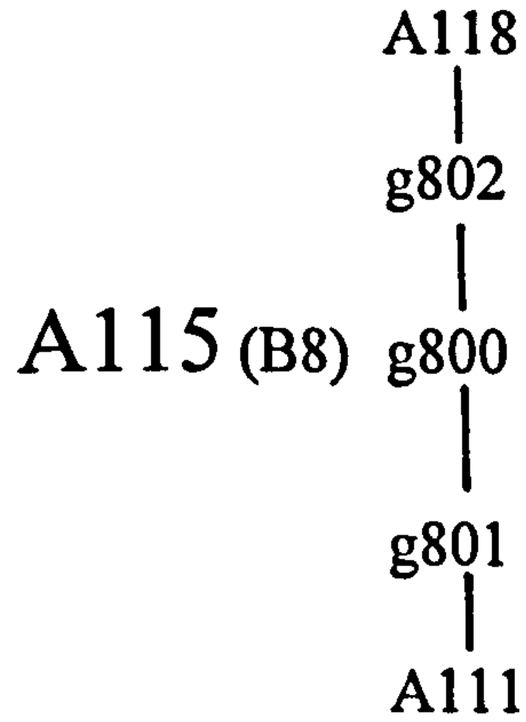

A115 was a renovation of the southern building on the plot, and its use. The deposits within the building continued to respect the northern wall line established in A111 (g799), and hearth g801 was a renovation of hearth g797 (A111).

The internal width of the building, as measured by the extent of the deposits within it, was 4m. Its length could not be determined, as it was cut away to the east by Stolpe's excavations.

The finds from the building, which included weights and slag, were not sufficiently different from the norm to provide a clear interpretation for the function of A115. The amount of ash and charcoal surrounding the hearth and the great heat damage suffered by it did, however, suggest an industrial rather than domestic function.

AREA: N

PERIOD: B8

A116.773 floor or 'occupation' deposit
774 the line of the northern wall; wattle marks in the soil
785 domestic debris around the northern corner of the building
824 domestic debris accumulated within the building
916 domestic rubbish respecting the northern long wall line
917 load-bearing post holes in the northern and southern wall lines

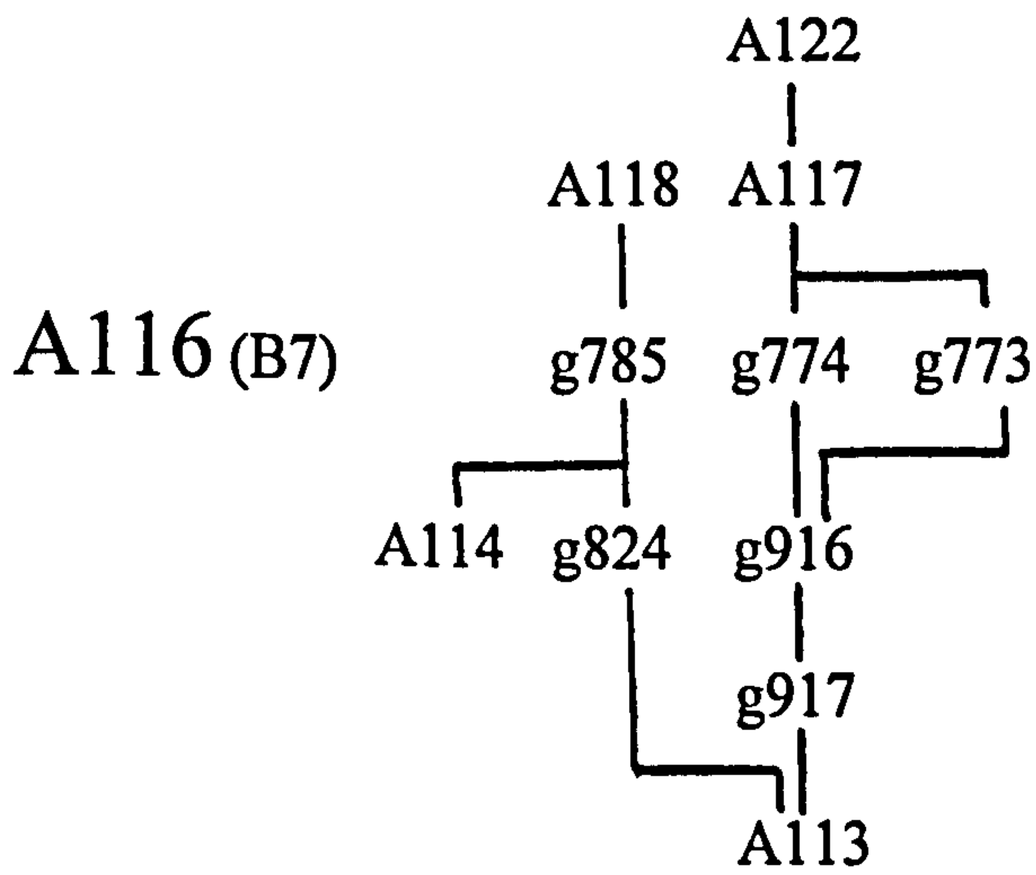

A116 was a new building on the northern part of the plot. It was cut by the northern wall line of building A111 (g799), which it immediately predated in the stratigraphic sequence. The structural details are scant, and the spacing of the load bearing post holes in the excavated area could either indicate a hut 3.5m wide, with paired post holes, and an alignment WNW-ESE, or, more probably a larger building c. 5m wide, with a south-western long wall based on pad stones.

The western corner of this building was dug during the first half of the 1991 season, and was recorded in less detail than the remainder of the building. In the western corner was a hearth, of small stones set in clay (Sxxx).

AREA: N

PERIOD: B7

A117.767 ash layers redeposited in the northern lane
768 domestic rubbish layers in the northern lane
769 redeposited domestic ash in northern lane
770 domestic rubbish in the northern lane

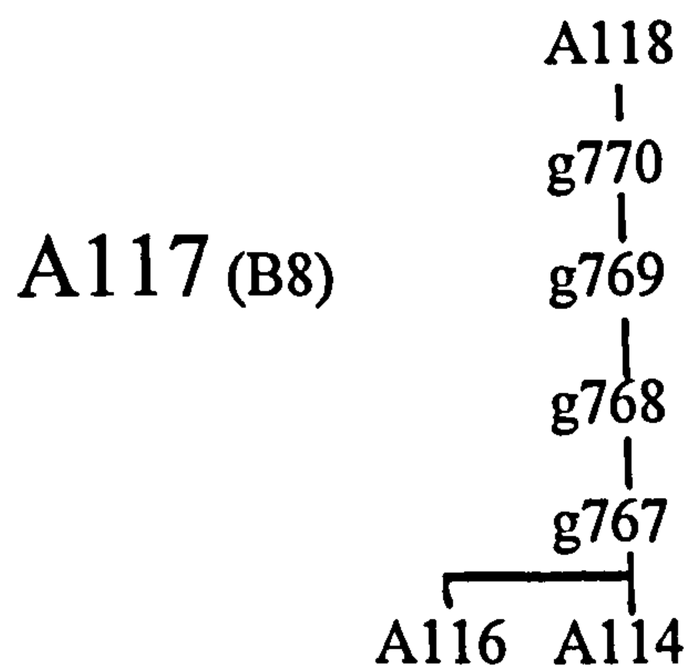

A117 consisted of rubbish deposits in the northern lane, related to the use of A116 and A122. These layers extended into the area of the northern building, possibly through an otherwise unremarked door in the northern long wall.

The finds in these deposits were very mixed, but showed no particular concentrations of any type of manufacturing debris. Importantly, however, they were given a terminus post quem of AD 914 in g768 (S673) by a Samanid dirham from Samarkand (F41495, which provided the tpq for the whole of phase B8.

AREA: N

PERIOD: B8

A118.784 use and clearance layers associated with hearth
803 hearth
822 two stake holes, probably contemporary with g803
912 post holes

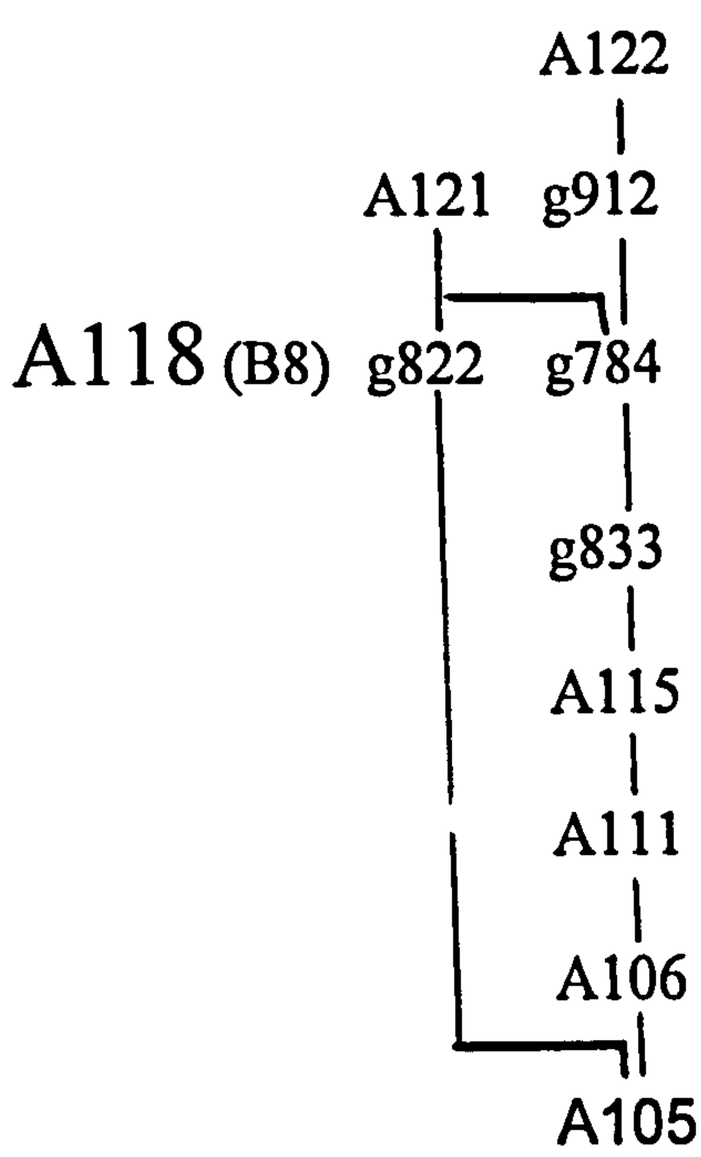

This very fragmentary building, A118, formed a renovation of the southern building on the northern plot. The wall lines continued in the same areas, but groups of stake and post holes c. 1m inside them (g822, g912) suggested the presence of internal furnishings, possibly wall benches or an internal wall. The hearth in this deposit series (g803) was a renovation of the underlying hearth (g801, A115).

There were few finds from these contexts, partially because of their small volume, but partly reflecting a continuing lack of finds in the southern building during phases B7 and B8.

AREA: N

PERIOD: B8

A119.428 domestic rubbish in lane between plots
810 domestic rubbish in the lane between the plots, with remains of a possible wood paving in the bottom of the deposits
812 domestic rubbish deposits in the southern lane
813 domestic rubbish layers in the southern lane
814 clay resurfacing of the southern lane
823 layers built up against the southern long wall of the southern building on the northern plot

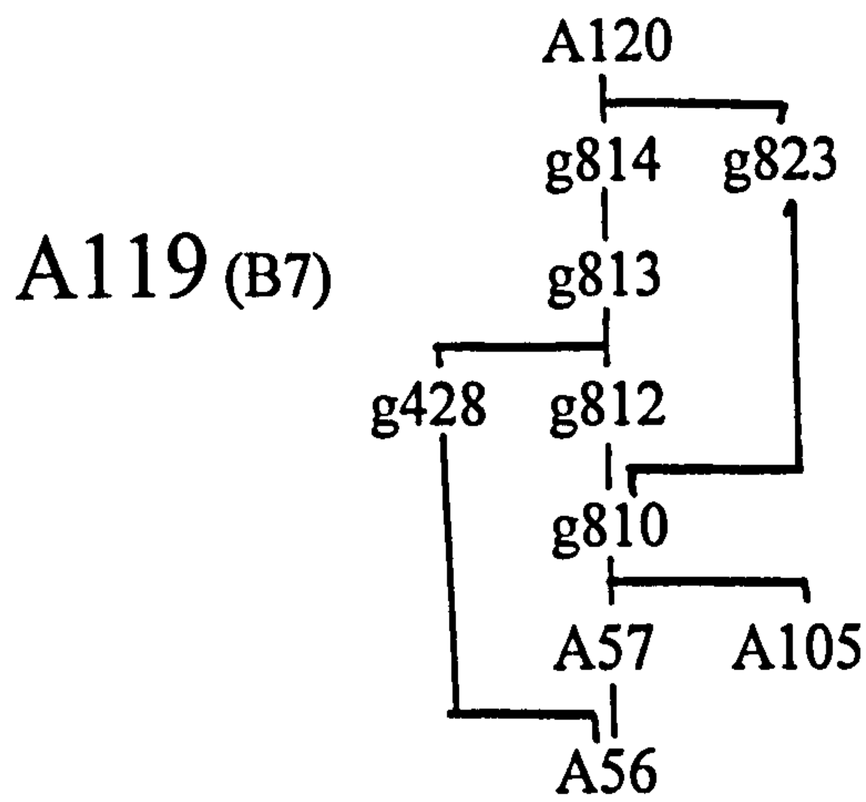

These rubbish layers in southern lane, were defined stratigraphically and geographically by buildings on southern and northern plots. To the south, they were contemporary with the construction, use and destruction of building A56, and to the north, with the construction, use and continuing renovations of building A105 (and A106). The lowest context in g810 (S989) contained widespread fragments of wood, which probably derived from a wooden surfacing of the lane, either of planks or wood chips. An alternative interpretation of this could suggest that these wood fragments were the remains of the destruction of the wall of an earlier building, but the extent of the deposit makes this less likely. A second resurfacing of the lane, later in the deposit series, was of clay (g814).

The finds from A119 were very mixed, but contained primarily domestic rubbish. Importantly, however, among the contexts which contained redeposited material from the destruction of A56 (g812, g813) was a small hoard. The hoard contained 20 coins, beads, amber fragments and weights, and was affected by heat to such an extent that two of the coins had melted together. Its small size and mixed contents suggested that it might have been the remains of a purse which had been lost in the destruction of A56. The latest of the coins could only be approximately dated, as it was an Eastern European imitation dirham probably from the Volga Bulgar

region, to AD 934-46 (Ingrid Gustin & Gert Rispling, pers. comm.). As this deposit lay relatively late in the A-unit, which itself lay late in phase B7, it provided a terminus post quem for the *end* of the phase.

AREA: N

PERIOD: B7

A120. 389 redeposited, and relatively find free clay
572 domestic rubbish in the lane between the plots
815 ash thrown out into the southern lane, levelling
816 domestic rubbish thrown out into the southern lane
817 redeposited domestic rubbish in the southern lane

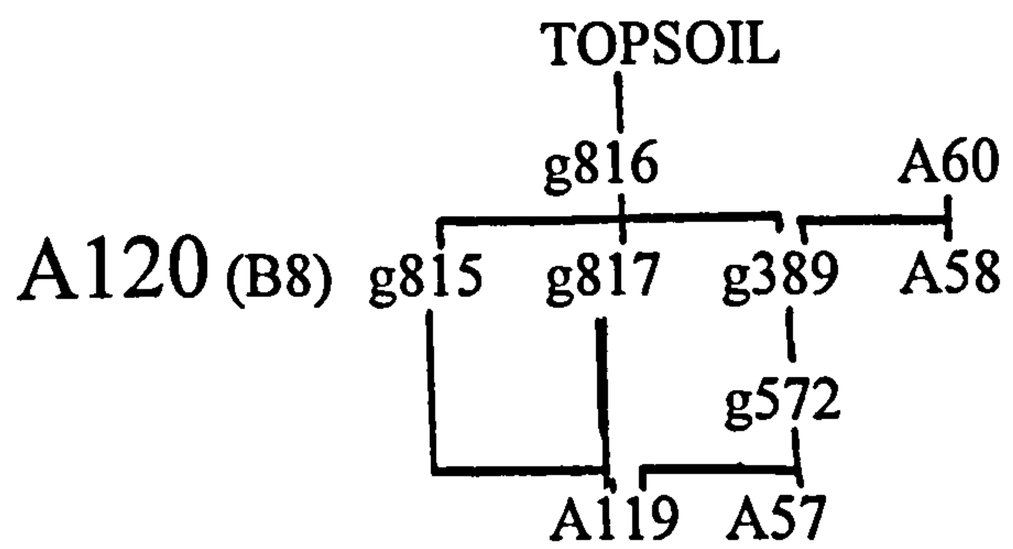

A120 consisted of the complete resurfacing of the southern lane, and the domestic rubbish layers which built up over the surface. These deposits were contemporary with the construction and use of building A58 on the southern plot, but had no direct stratigraphic relationship with the phase B8 buildings on the northern plot, to which they were also contemporary.

The finds from A120, which contained large amounts of bone, were primarily of a domestic character, and contained no noticeable amounts of industrial debris. The large, relatively unfragmented nature of the finds suggested that these contexts built up rapidly, and under conditions of relatively little traffic. It is possible that the southern lane functioned less as an access than as an open area during the later phases of occupation on site.

AREA: N

PERIOD: B8

A121.804 hearth construction, with associated stake and post holes for a hearth screen
805 clearance from hearth g804
918 hearth

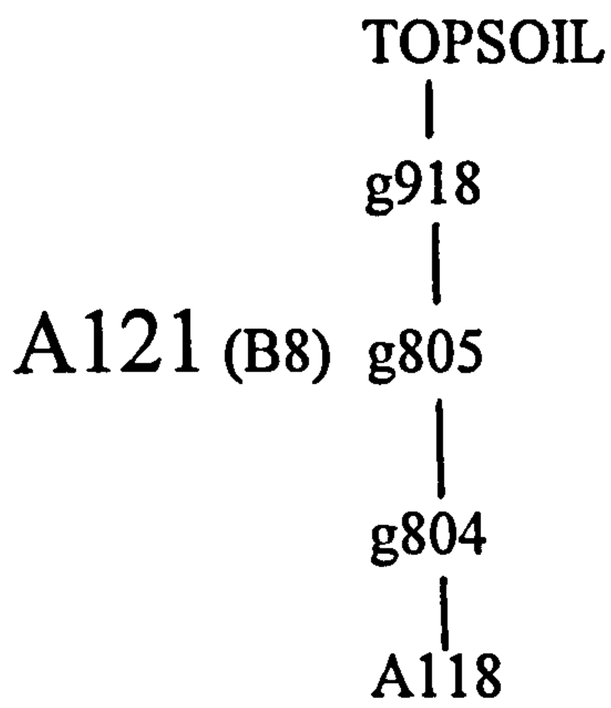

A121 formed the latest, plough damaged remains of a building on the southern part of the plot, consisting of two superimposed hearths (g804, g918), interspersed by a series of clearance layers relating to the use of the earlier hearth, g804. The repeated renovation of hearths on the same point, and their clearance layers within the limited area of the southern building caused such an uneven surface over the southern part of the plot that the overmost remains of these buildings were extremely fragmentary.

Because of the extensive plough damage to this building, the finds from A121 have a high risk of contamination.

AREA: N

PERIOD: B8

A122.786 plough damaged deposits lying in area of building
787 plough damaged deposits in the area of a building
788 deposits immediately underlying the topsoil in the northern lane
913 post holes
915 post holes

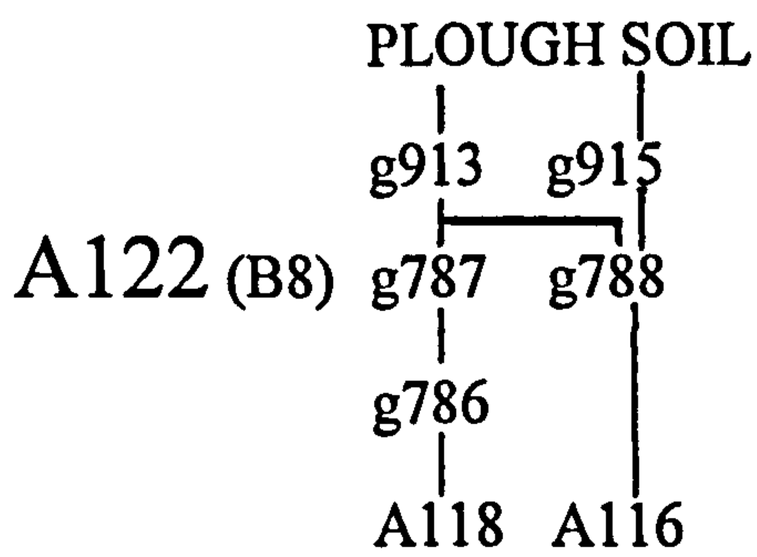

This deposit series contained the highest, plough damaged deposits in the area of northern building, including six large post holes orientated NE-SW across the site (g913, g915). A122 was contaminated, disturbed, and impossible to interpret but probably derived from activities within a building, except those deposits which are clearly in the area of the northern lane.

The position of the groups of post holes g913 & g915 suggests a radically different orientation for a structure on this plot in the very latest phase. They can be interpreted either as the post holes for a cross wall within a building 6m wide, oriented NW - SE (as the underlying buildings were), or they could more probably be interpreted as the post holes for the long wall and northern end wall of a building at least 6m long, oriented due north-south. The structural evidence for this building was, however, extremely slight, and the plough damage to the related deposits meant that their extent could not be used as a reliable indicator of the position of the wall lines.

There were many finds in these deposits, but it would be unwise to treat any of them as securely stratified.

AREA: N

PERIOD: B8

APPENDIX D:

GROUP DESCRIPTIONS FROM BIRKA 1990-1995

GROUP DESCRIPTIONS FROM THE EASTERN AREA

g-nr	s-nr	s-unit description	group interpretation
1	1281	cut filled with loose brown bony rubbish.	a small pit in the northern lane - possibly a post hole, but with no clear evidence one way or another. A40 B4
2	1258	boney rubbish in brown sandy silt.	domestic rubbish spreads in the northern lane, with no evidence for metal working. A40 B4
	1269	"	
3	1271	white ash, with some bone, etc. burnt wood, orange sandy ash.	possibly the remains of a burnt turf roof (turf ash is sandy and red), redeposited as a rubbish layer in the northern lane. A40 B4
	1280		
4	1282	bone and other rubbish.	domestic rubbish deposits in the northern lane, with no evidence of metal working. A40 B4
	1286	ashy rubbish layer	
	1295	animal bone in brown sandy silt.	
5	1297	half of a posthole 0.15m dia, 0.07m deep, cut by Stolpe, filled with grey brown silt.	a post hole, without a corresponding stone packing - therefore for a driven post or pile. A40 B4
6	1302	brown black sandy silt, with bone and other domestic rubbish.	domestic rubbish layers in the northern lane, without evidence for metal working. A40 B4
	1308	redeposited grey-white ash.	
	1311	bone, charcoal, sandy silt.	
7	1341	shallow (0.04m) cut filled with domestic rubbish.	a small pit or post hole, with stone and domestic rubbish fill, in the northern lane. A40 B4
8	1333	ash, charcoal, bone in grey black sandy silt.	domestic rubbish spreads on the edge of the northern lane. A40 B4
	1334=1379	ash, charcoal and bone in grey black sandy silt.	
	1337	boney rubbish in brown black sandy silt.	
9	1313	white redeposited ash with bone, charcoal and fired clay.	domestic rubbish, particularly redeposited ash, in the northern lane. A40 B4
	1316	white redeposited ash, with bone, charcoal and fired clay.	
10	1400	loose, badly sorted mixed ash, charcoal, bone &c.	domestic rubbish, but probably redeposited in a disturbance, possibly modern, but probably ancient. A40 B4

11	1401	bone, charcoal, iron and bronze corrosion in black clayey silt.	domestic and industrial rubbish from a copper alloy casting workshop, deposited in the northern lane. A40 B4
	1437	black silt, with charcoal, bone and much casting waste.	
12	1453	post hole filled with white grey ashy silty sand.	a post hole with no stone packing, on the edge of the northern lane. A40 B4
13	1262	description missing, but finds very similar to s1454 - probably the same.	industrial rubbish, slightly laminated, in the northern lane. A40 B4
	1454	bone, charcoal, flecks of bronze and iron corrosion in black sandy silt.	
14	1368	black grey sandy silt with red and white ash, and charcoal.	domestic rubbish spreads in the northern lane. A45 B4
	1382	brown black sandy silt with bone, ash and charcoal.	
15	1427	redeposited grey ash, much bone locally, some articulated.	domestic rubbish, possibly with industrial waste as well, within a building or work area. A45 B4
	1476	grey black sandy silt with much ash, some bone.	
	1519	white redeposited ash, with charcoal, little bone.	
	1543	white grey ash, charcoal, iron objects and little bone.	
16	1507	black grey silt with boney rubbish, and clay.	domestic rubbish probably built up over a period of time within a building, or the entrance to that building from the northern lane. A45 B4
	1562=1396	laminated black grey sandy silt with boney rubbish, charcoal and much wood.	
17	1556	sub-rectangular stone-filled hole, 0.4 x 0.3m, with one large, vertical wedge stone and several smaller packing stones.	posthole on the edge of the northern lane, probably in the northern long wall of a building. A37 B4
18	1374	red brown sandy silt with large pieces of charcoal oriented E - W, some bone and iron corrosion flecks	metal working waste in the northern lane, with organic material, slightly laminated indicating an accumulation over time. A45 B4
	1391	charcoal, corrosion flecks bone, wood fragments in brown black sandy silt.	
19	1570	grey black sandy silt with charcoal, a little bone, and corroded iron objects.	metal working debris in the northern lane. A45 B4
20	1606	sub-rectangular stone filled post hole, 0.4 x 0.3m.	post hole on the northern plot boundary, probably in the northern long wall of a building. A37 B4

21	1619	grey black sandy silt with much charcoal, some bone.	domestic rubbish in the northern lane. The degree of lamination indicates an accumulation and compaction over a period of time. A45 B4
	1639=1629	laminated black grey sandy silt with ash, charcoal, much bone and organic material.	
	1680	grey black sandy silt with much charcoal, some bone.	
	1706	grey black sandy silt with much charcoal, some bone.	
22	1687	grey white redeposited ash with much stone, some burnt, clay and charcoal.	redeposited clearings from a hearth, possibly functioning as a fill or levelling layer in the northern lane. A45 B4
23	1681	clean grey white redeposited ash layer.	clearings from hearth, in the northern lane, and apparently primarily domestic in character. A45 B4
	1711	grey white, slightly laminated ash, some burnt stones.	
24	1794	post hole, 0.2m dia, with a fill of brown silt and a couple of small packing stones	post hole, with two stones on the southern edge which may be pad stones for a rebuild, or may be supports for the post. A37 B4
25	1304	Slightly laminated light grey ash layer.	industrial waste within a building or work area bounded by the northern lane. The majority of waste products in these deposits seem to come from iron and copper alloy working. A37 B4
	1752	black grey sandy silt with charcoal, iron waste, copper alloy corrosion etc.	
	1757	grey speckled sandy silt with charcoal, and corrosion flecks	
	1795	brown sandy silt with ash and charcoal	
	1796=1761	speckled brown sandy silt with charcoal, ash, corrosion spots	
	1797	black grey sandy silt with charcoal, iron waste, copper alloy corrosion etc.	
	1822	speckled brown sandy silt with charcoal, ash, corrosion spots	
26	1799	post pipe, irregular, 0.4 x 0.45m, filled with black silt	post hole and associated packing in the northern building. The size of this post hole suggests that it was a load bearing post for the roof of the building. A37 B4
	1800	filling of brown sandy silt and stones 0.1-0.15m	
27	1805	Black grey clayey silt with clay, charcoal, ash, corrosion flecks	deposits of industrial metal working waste in the northern lane and into the northern plot and eastern lane. A3 B4
	1816	Black grey clayey silt with clay, charcoal, ash	
28	1494	Grey black sandy silt with bone, ash and corrosion flecks	rubbish deposits, with both domestic and industrial waste, in the area of the northern lane. The wood flecks in s1826 may represent a resurfacing of the lane with either planking or wood chips. A26 B3
	1826	black clayey silt with some mold fragments, bone, charcoal and tiny flecks of wood	
	1832=1891	black clayey silt with bone, fired clay, clay and charcoal	

29	1824	post hole, 0.2m dia, filled with brown sandy silt, and a couple of small stones.	this post hole in the northern part of the northern building is associated with two larger stones on its southern edge. These may be pad stones for a repair or rebuild, or may be support for the post. See also g24. A37 B4
30	1850	grey sandy silt with charcoal, ash, bone, iron waste - mixed rubbish.	rubbish or occupation deposits over a floor surface. Possibly these are the remains of the floor, with trampled rubbish and waste from domestic and industrial use. s1885 contains wood flecks which probably result from a covering of wood chips or planking. This group respects and defines the northern wall line of the northern building. A12 B3
	1872	grey clayey silt, few bones, clay, fired clay, charcoal and ash.	
	1885	dark grey clayey silt, with charcoal, wood flecks.	
31	1265	yellow sand, some casting waste laminated yellow sand	a fill or levelling layer of redeposited sand, with casting waste, ash and charcoal on its upper surface. This is probably a casting floor, and is in the northern building. A12 B3
	1855	yellow sand with a little burnt stone	
	1962	mixed light brown sandy - clayey silt	
	1964		
32	1868	slightly laminated clayey silt with mixed rubbish, NB many moulds	mixed domestic and industrial rubbish in the northern lane. A36 B3
	1995	redeposited white ash lens.	
	2015	grey clayey silt with bone and mixed rubbish	
33	2018	stone packing, ca 54l of stone, 0.1 - 0.4m, oriented NW - SE, on the northern edge of the plot.	sill stones for a wall or fence line between the plot and the northern lane. It is probable that these are the foundation for the northern plot boundary, parallel with the northern lane. A36 B3
	2040	stone packing of stones 0.1 - 0.3m on the northern edge of the plot.	

34	1611 2095	redeposited grey green clay. mixed clayey silt with lumps of redeposited grey-green clay.	levelling deposit filling subsidence hollows in the underlying layer in the eastern corner of the site. A1 B3
35	2097 2098=2106 2099 2100 2101 2102 2103 2104 2105	stake hole/small post hole, 0.12 x 0.09m, 0.06m deep. stake hole, 0.08m dia, 0.07m deep. small post hole, 0.12m dia, 0.06m deep. bottom of a post hole, 0.15 x 0.13m, 0.03m deep. post hole, 0.14m dia, 0.08m deep. post hole, 0.18 x 0.12m, 0.08m deep. stake hole, 0.09m dia, 0.11m deep. small post hole, 0.12m dia, 0.05m deep. bottom of a post hole, 0.15m dia, 0.03m deep.	a group of large stake holes and small post holes in three closely parallel lines of three, which derive from a piece of working equipment or furniture - a fixed bench, or anvil, perhaps. As this is at the eastern edge of the plot, the damage to the surrounding deposits makes it difficult to interpret. A28 B2
36	2116=2118 2126 2164	brown black clayey silt with bone, charcoal and organic material. lens of redeposited grey-green clay. brown black clayey silt with bone, charcoal and organic material.	domestic rubbish, and levelling deposits in the area of the eastern corner of the site. A28 B2
37	1279 2125 2194	dark brown sandy silt with bone and charcoal. white ashy silt, with bone. dark brown sandy silt with bone and charcoal.	sandy rubbish deposits, containing primarily domestic waste in the eastern corner of the plot. A28 B2
38	1931=1930 2131 2195	grey black - brown clayey silt with bone, charcoal and fired clay. grey green clayey silt with bone. yellow - red brown sandy gravel.	boundary ditch oriented NW - SE, and associated fills in the ditch and over the edge of the plot. The ditch is ca 2m long, 0.5m wide, and marks the eastern part of the northern edge of the plot. A27 B2
39	2279 2322	black sandy silt with bone and charcoal. grey black sand with bone and charcoal.	domestic rubbish layers in the boundary ditch. A24 B2
40	2170=2280	redeposited grey-green clay, packed with stone 0.03 - 0.2m, and with wood flecks on the lower surface.	levelling deposit over the boundary ditch on the northern edge of the plot. The wood flecks may represent the remains of a wood lining, or organic fill, in the ditch. A24 B2

41	1880	rotten wood remains - wattle.	part of a wattle fence or wall line, of stakes spaced ca. 0.1m apart, along the northern edge of the plot. A66 B3
		stake hole, 0.06m dia	
	1881	stake hole, 0.05m dia	
	1882	stake hole, 0.04m dia	
	1886	stake hole, 0.06m dia	
	1887	stake hole, 0.08m dia	
	1888	stake hole, 0.1m dia	
	1889		
42	1856	disturbance, loose, mixed fill.	probably animal hole, in the eastern end of the northern building. Intrusive disturbance, so not grouped to a higher level.
43	1549	black sandy silt with charcoal, ash, metal-working rubbish.	industrial rubbish deposit, slightly laminated, probably within a building or work area. A25 B4
44	1548	red clayey silt, bone and metal-working rubbish.	industrial rubbish layer in the northern lane. A36 B3
45	2301	stake hole, 0.04m dia, 0.1m deep.	a group of stake holes, probably in a wall line at the eastern end of the northern building, or in the eastern lane. A7 B1
	2309	stake hole, 0.08m dia, 0.1m deep.	
	2310	stake hole, 0.1m dia, 0.1m deep.	
46	1769	stake hole, 0.1m dia, 0.12m deep.	a group of stake holes in a fence line on the early southern plot boundary. A6 B1
	1770	stake hole, 0.09m dia, 0.22m deep.	
	1771	stake hole, 0.06m dia, 0.05m deep.	
47	1921	sandy - gravelly silt with small lumps of clay, bone, fired clay, ash, charcoal and organic content.	domestic rubbish, outside the plot in the eastern lane. A8 B1
48	1475	post hole, oval 0.4 x 0.3m, 0.2m deep.	sill stones and a post hole forming part of a wall line on the edge of the northern lane. A37 B4
	1540	row of stones in s1541.	
	1541	redeposited grey-green clay.	
49	1221	redeposited grey-white ash with charcoal.	redeposited ash layer in the eastern lane. A39 B3
50	1222	black brown sandy silt with charcoal and boney rubbish.	domestic rubbish in the eastern lane. A27 B2
51	1224	redeposited white ash.	ash layer in the eastern lane. A27 B2
52	1225	clean, scarlet sandy silt.	may be metal-working waste, or redeposited, burnt material from house fire, in the eastern lane. The striking colour suggests the presence of a metal salt. A24 B2
	1242	dark brown sandy silt with lenses of red, sandy silt, charcoal and bone.	
	1247	"	
	1254	"	
	1267	"	

53	1284	brown silt.	silt layer, possibly the slight remains of a vegetation horizon in the eastern lane. A24 B2
54	1292=1305	redeposited grey-green clay.	levelling or surfacing spread over the eastern lane. A24 B2
55	1306	three rubbish layers, lacking detailed description.	probably domestic rubbish, in the eastern lane. These deposits were inadequately recorded, and are truncated on all sides by Stolpe's excavations, but appear not to have had any structural significance. A24 B2
56	1339	post hole, cut in half by Stolpe, 0.4m dia, filled with black clayey silt and with a large piece of charcoal in it - possibly the remains of a charred post.	post hole on the eastern edge of the plot. A24 B2
57	1307	compact, brown black clayey silt with unbroken bone, charcoal, ash, fired clay.	domestic rubbish spread over very large area, east of the building on this plot, and in an open area, or possibly an eastern lane. A22 B2
	1338	loose textured black sandy silt with charcoal, fired clay, bone, ash.	
58	1218	post hole, stone packing in cut 2m dia, 1m deep, with driven post of oak, 0.5m dia, 2m surviving.	three large post holes, for posts with pointed ends driven into cuts, then filled with stone and redeposited clay. The timber in s1218 was from the same tree as the timber in s4027(g880), in the first jetty construction. A6 B1
	1206=2017	stone packing in a large cut, 1.2 dia, 0.95m deep, filled with stones <0.6m dia in grey green clay.	
	2052	post pipe, 0.35m dia, in massive stone packing 1.2m dia.	
59	3950	row of stones <0.25m dia.	plot boundary features in the bottom of Stolpe's trench, extending south of the main excavated area of the site. A42 B1
	3951	post hole.	
	3952	post hole.	
	3957	post hole, 0.35m dia, 0.2m deep.	
	3958	post hole, 0.22m dia, 0.15m deep.	
	3959	post hole, 0.34m dia, 0.36m deep.	
	3960	pit c. 1.2m dia, 1.3m deep.	
	3995	three large stones <0.3m dia, in a N-S row.	
	4002	cut, with a stone packing on its eastern edge.	
	4003	grey redeposited ash.	
	4006	brown, highly organic, clayey silt, with much birch bark and wood chips.	
	4010	mostly wood chips and wood working debris, below the water table.	

60	1943	redeposited grey-green clay.	levelling spread in the eastern lane. A24 B2
61	1942	dark brown sandy silt, large, often articulated bones.	domestic rubbish layers in the eastern lane and over the eastern edge of the plot. A22 B2
	1963	light brown sandy silt, charcoal, few bones.	
	1974	black sandy silt, with much charcoal and bone.	
62	1956	mixed brown sandy silt, stoney, many vertical bones.	small pit with two rubbishy fills, in the eastern corner of the site. A22 B2
	3240	brown sandy silt, fewer bones.	
63	1955	bottom of post hole, the upper part of which was dug away, 0.3m dia, two stones 0.15m dia in the fill.	post hole on the eastern edge of the site. Stratigraphically and topographically, part of the earliest plot boundary to the east. A6 B1
64	1185	redeposited white ash.	redeposited ash layers in the eastern lane. A39 B3
	1197	redeposited pink ash.	
	1196	redeposited yellow ash.	
65	1200	brown clayey silt with charcoal, few bones.	mixed domestic and industrial rubbish in the eastern lane. A39 B3
	1201	black brown clayey silt, charcoal, bone, corrosion spots.	
66	1202	redeposited grey-white ash with little charcoal.	ash lens in the eastern lane. A39 B3
67	1207	brown sandy silt with iron and bronze scrap and corrosion, wood flecks.	industrial rubbish layers in the eastern lane. A27 B2
	1238	yellow ash, lumps of rust and iron objects.	
68	1240	rectangular cut 0.5 x 0.1m with traces of wood.	sill beam in a slot, relating to the foundation of a wooden superstructure or paving in the eastern lane. A27 B2
69	1244	brown black sandy silt, large bones, risk of contamination high.	domestic rubbish layers in the northern lane. These have a very high risk of contamination from the adjacent trench edge. A38 B4
	1285	brown sandy silt, large bones, certainly several contexts dug as one.	
70	1243	redeposited grey-green clay.	levelling deposit or floor layer, adjacent to the northern lane in the eastern corner of the site. A38 B4
71	1275	bottom of a (largely dug away) post hole, filled with ca 50l stone, and clayey silt, 1m dia.	pair of large post holes, deriving from a structure in the eastern corner of the site. Dug away by Stolpe and difficult to relate to anything other than each other. A38 B4
	1278	post hole, 1m dia filled with stone < 0.3m.	

72	1260	brown sandy silt, large bones, ash, clay, fired clay and charcoal.	domestic rubbish layers in the northern lane. A38 B4
	1299	white redeposited ash, with bone, fired clay, charcoal and burnt stone.	
	1301	black clayey silt, wood flecks, charcoal, ash, fired clay and bone.	
73	1287	dark brown sandy silt, large bones, charcoal, fired clay and ash	domestic rubbish layers in the northern lane. A38 B4
	1288	relatively clean redeposited ash, few bones and stones.	
	1290	grey brown, mixed, clayey silt, large bones and a few stones.	
74	1291	orange sandy silt, with charcoal and some bone.	domestic rubbish layers in the northern lane. The amount of charcoal, and the presence of redeposited burnt turf, strongly suggests that these deposits derive from the levelling or clearance of the plot after a fire. The contemporary layers over the rest of the plot are, however, dug away by Stolpe. A38 B4
	1293	black silt with bone, charcoal, and clay.	
	1294	black clayey silt with large bone, charcoal, and large stones.	
75	1296	redeposited grey white ash, few bones.	redeposited ash and domestic rubbish layers in the eastern corner of the plot. A38 B4
	1314	redeposited grey white, clayey ash, with large bones.	
76	1283	group of stones set in s1373, without clear structure.	stone packing probably from the gable line of a building, which lay just here. It is worth noting, however, that it is difficult to relate this to anything else, as a result of Stolpe's depredations, and any functional interpretation at this level of the analysis is therefore speculative. A38 B4
	1373	redeposited grey-green sandy clay.	
77	1373	thin, light brown sand layer.	levelling/fill layers in the eastern corner of the plot. A38 B4
	1378	redeposited grey-green clay.	
78	1381	mixed brown-grey-green redeposited clay.	levelling/fill layer in the eastern corner of the plot. A38 B4
	1398	redeposited grey clay, mixed with sandy silt.	
79	1399	clay mixed with sandy silt in a narrow rectangular cut, 0.4 x 0.1m, 0.3m deep	hole from deeply set plank or stave, which by its size may well have had structural importance. A38 B4

80	1405	mixed, redeposited grey brown clay, with large bones and a few stones.	this group appears to be primarily rubbish layers, in the eastern end of the northern lane, but the lack of small bones and crushed bones noted during excavation of s1405 suggests that they were probably not heavily trampled. A38 B4
	1428	clay, ash and sandy silt of mixed colours, with bone, organic material, fired clay and charcoal.	
81	1444	redeposited clay overlain by a thin sand layer.	again, more fill and/or levelling deposits in this eastern corner of the trench, difficult to interpret because of their stratigraphic isolation. A38 B4
	1451	brown sandy silt with lumps of clay.	
82	1449=1542	yellow brown redeposited clay. redeposited grey clay .	levelling deposit in the eastern corner of the trench A38 B4.
	1568	redeposited green clay.	
	1608		
83	1465	brown sandy silt, much bone and fragments of wood	rubbish deposits in the northern lane, largely domestic in character, and, in s1465, possibly showing evidence for the surfacing of the lane with either planking or wood chips. A38 B4
	1473	brown clayey silt, large bones, ash, fired clay and charcoal	
	1497	grey clayey silt, bones, ash, fired clay and charcoal	
84	1550	yellow redeposited ash, with some bones, probably deriving from s1552.	rubbish deposits in the northern lane. It is possible s1550 was deliberately spread over the surface of s1552 in order to minimise the unpleasantness of that deposit. The lack of disturbance and crushing of the bones of s1552 suggests that it was rapidly covered before it could be trampled. A38 B4
	1552.	loose, brown clayey silt, vast amount of bones, many articulated.	
85	1571	silty clay, with wood fragments orientated NW-SE and large, embedded stones in the northern lane.	remains of a fence line along the northern lane. The large stones may have functioned as supports, props or wedges for a plank, split log or cordueroy road surfacing. A38 B4
86	1513	mixed sand, ash, burnt clay, and charcoal.	burnt structural details, almost certainly a wall line, related to an unburnt fragment of floor (s1597), but cut away on three sides by Stolpe's excavations. A66 B3
	1573	black silt, charcoal, burnt clay daub with impressions of wattle. grey-yellow clay.	
	1597	mixed sand, ash, burnt clay, and charcoal.	
	1618		
87	1611=1669	light grey brown sandy clay, with charcoal and burnt clay.	possibly remains of a working floor associated with g86, above. A66 B3
88	1582	clayey redeposited ash layer.	redeposited ash layer in the eastern corner of the excavated area. A38 B4
89	1577	light grey redeposited clay, with little bone or stone, but some fired clay.	another fill/levelling deposit in the eastern corner of the plot, which respected the edge of the northern lane. A38 B4

90	1592 1676	stone packing. clayey silt, few bones.	sill stones in clay, along the northern boundary of the plot and probably contemporary with g48. A3 B4
91	1598 2053	black brown clayey silt, clay flecks, bone and charcoal black, clayey silt, with charcoal and some bone.	domestic rubbish in the northern and eastern lane. A3 B4
92	1594 1622 1820	redeposited light brown clay, few bones. redeposited pale grey clay, with few finds. light brown clay, few stones.	fill/levelling deposit, or remains of a clay floor, in the eastern corner of the plot. A3 B4
93	1849	spot of red, burnt clay with a little white ash, find free.	this deposit was initially interpreted as the remains of an otherwise removed hearth. Its position, however, in the eastern corner of the plot, makes this slightly unlikely, and it is more probable that it derives from an uncontrolled fire in this area, or from the clearance of a burnt building, A26 B3
94	1851	stake hole, 0.05m dia , 0.1m deep.	stake hole adjacent to g93. A26 B3
95	1599=1622 1879	grey clay, with few finds, but stones marking the northern edge against the adjoining, northern lane. light brown, redeposited clay	fill and levelling deposit in the eastern corner of the plot, and including sill stones marking the boundary of the plot against the northern lane. A26 B3
96	1609	black charcoal, charred wood and burnt daub, including a charred beam oriented NE - SW, 0.5 x 0.15m.	burnt structural remains from the collapse of a wall, and containing the sill beam from that wall. A 66 B3
97	1634	burnt black brown sandy silt with charcoal, and organic remains.	the clean, sandy silt texture of this deposit suggests burnt turf, although is does not have the characteristic red orange colour, and it may derive from a burnt, collapsed, turf roof. A66 B3
98	1682 1825	grey black clay with charcoal. dark clayey silt, with some bone, charcoal.	clayey domestic rubbish layers lying immediately over water-deposited sand, but deriving from the first occupation of the northern part of the plot. A1 B3
99	1896 2062	grey, redeposited clay with little charcoal. black, clayey silt, with charcoal and some bone.	fill/rubbish layers on the northern edge of the plot. A66 B3

100	2068	stake hole, 0.04m dia , 0.07m deep.	stake holes in a fence or wall line along the northern boundary of the plot. A66 B3
	2069	stake hole, 0.1 x 0.06m, 0.13m deep	
	2070	stake hole/small post hole, 0.11 x 0.08m, 0.15m deep.	
101	2063=2064	green brown redeposited silty clay.	stone setting, probably sill stones for a wall or fence line, but possibly threshold of an entrance in the wall or fence along the edge of the northern lane. A1 B3
	2084	group of stones set in s2063.	
102	1971	stake hole, 0.08m dia.	pair of stake holes, in the casting floor g106 (s2110 &c). See also g104. A12 B3
	1972	stake hole, 0.08m dia.	
103	1973	mixed sandy silt, with clay flecks, charcoal and fired clay.	layers of industrial debris deriving from the use of the casting and working floor g106. A66 B3
	1983	yellow white sandy silt, mostly ash, with an admixture of mould fragments.	
104	1975	stake hole, 0.095m dia, 0.07m deep.	a group of stake holes forming a fence, or more probably a wall line, clearly related to the use of the casting floor g106. The smaller of the stake holes in this group might derive from structures associated with the sunken features in g106, but their function is unclear, and it seems wiser to relate them to the wall line. A66 B3
	1976	stake hole, 0.08m dia, 0.06m deep.	
	1977	stake hole, 0.09 x 0.07m, 0.06m deep.	
	1978	stake hole, 0.03m dia, 0.085m deep.	
	1979	stake hole, 0.05 x 0.03m, 0.09m deep.	
	1980	stake hole/small post hole 0.11 x 0.08m, 0.045m deep.	
	1990	stake hole, 0.05m dia, 0.07m deep.	
105	1982	black, fine charcoal (silt).	clearing from hearth, probably associated with the use of g106. A66 B3
106	2110	clean, redeposited yellow clay containing two small oval bowl-like features cut into the surface. Each feature was ca. 0.3m dia, 0.1m deep, lined with clay and had been fired after construction.	clay floor, interpreted as a casting floor for metal working, with two small warming hearths built into the surface. Each of the two features contained a fill of laminated sandy ash and charcoal which was excavated as part of and contemporary with g103. It is suggested that these hearths were used for warming molds prior to casting. A66 B3
107	2119	grey-black sandy silt spotted with clay, ash, and charcoal.	working surface/occupation layer, with evidence for metal working. The risk for contamination is great, as this surface lay immediately under some of Stolpe's subrectangular pits. A28 B2
	2182	silt and clay with ash and charcoal	

108	2045	black sandy silt with burnt wood.	a northern boundary ditch between the plot and lane, and the remains of an associated fence line (burnt), with the resulting fills of the ditch. A66 B3
	2196	grey-black clayey silt with remains of wood.	
	2303	clayey silt with burnt wood.	
109	2296	row of stones set in clay.	sill stones for wall or fence on northern plot boundary. A66 B3
110	1997=2294	red layer of clayey sand	the lowest fill in the northern boundary ditch g108. A66 B3
111	1925	row of stones <0.3m set in s1946	sill stones for a wall or fence along the northern plot boundary. A12 B3
	1946	redeposited brown clay mixed with much stone 0.1-0.15m	
112	1948	small post hole, without packing, 0.2m dia, filled with fine brown silt	a post hole on the northern plot boundary, deriving from the renovation of the northern building. A12 B3
113	1949	thin, highly laminated layer of brown silt and clay with fired clay and charcoal	use and occupation layers from metal working either inside a building, or, less likely, as a work surface on a yard north of a workshop. A66 B3
	1960	black sandy silt with clay, charcoal and few bones	
	1991	grey sandy silt, with ash, charcoal and clay	
114	2019	clean, redeposited yellow brown clay, containing an oval, bowl-like feature, 0.3m dia, 0.1m deep, cut into its surface and surrounded by a burnt and fired area	clay floor or levelling deposit, containing a warming hearth of the type observed in g106. This layer, although cut away on all sides by Stolpe's excavations, is probably a part of the same surface as g106. A66 B3
115	2134.1	grey sand and 0.1m stone	an oval hearth, 0.8 x 0.5m in size, bounded by ca 15 stones 0.1-0.15m around an area of fired clay packed with smaller, burnt stones. The associated ash layer was given the same s-nr, as was the underlying sand foundation. A2 B2
	2134.2	yellow clay	
	2134.3	yellow-grey gravelly sand (burnt, disintegrated stone)	
	2134.4	grey ash	
	2160	stake hole, 0.05m dia, 0.03m deep	
	2163	stake hole, 0.05m dia, 0.07m deep	
116	2046	0.1-0.2m large stones packed with yellow clay	stone packing, clearly not a hearth, as it is not burnt, but probably forming the foundation for an important structural element such as a building corner, or gable. There is also a possibility that it may be the threshold for an entrance to a building or room. A66 B3
	2065	0.15.-0.2m large stones in yellow clay	
117	2086	black silt, charcoal and crushed shell	clearing from domestic hearth, lying within a building. A2 B2
	2124	black sandy silt, charcoal, and burnt clay	

118	2123	vague collection of stones 0.1-0.2m large, in grey silt with charcoal and ash	a group of silty rubbish layers - possibly redeposited from another area as a fill and levelling layer, as it shows little structure, and lies over an area with a series of rows of sill stones. A2 B2
	2165	grey black clayey silt, with charcoal	
	2287	grey clayey silt, with charcoal	
119	2258	grey silt, ash and clay filling a cut, with three stones <0.4m lying on the surface.	the function of this small pit, with its disturbed rubbishy fill is unclear. The presence of the stones on the surface, however, suggests the possibility that it may be part of a row of sill stones, or a large post hole disrupted by the removal of the post. The placing of the group also suggests that it may have been rough paving for a threshold. A66 B3
	3999	ca. 10 stones, <0.1m dia, in black clayey silt	
120	2282=2304	light grey-brown silty sand with some bone, but otherwise virtually find free	this may have been either a fill layer or a casting floor which was kept relatively clean. s2328 is grouped here because, although it includes material from as low as g312, the uppermost deposits contaminate the remainder, and it had to be moved up the sequence. A2 B2
	2328	a mixture of layers, including light yellow brown sandy silt	
	2530	dark brown, silty sand fragmented finds	
121	1248	black grey sandy silt with clay, fired clay, and charcoal	these deposits, which were cut away on all sides by Stolpe's excavations, formed the lower part of one of the surviving standing sections between two of his strip trenches. They are in the area of the northern building, or the plot boundary, and all appear to be redeposited rubbish layers, deriving from both domestic and industrial activity. The risk of contamination by later material is substantial. A37 B4
	1253	red, brown and black sandy silt, with fired clay, ash, charcoal and bone	
	1255	mixed sandy silt, with bone, organic material, clay, fired clay, ash and charcoal	
122	1259	redeposited grey and red clay with iron corrosion, charcoal, fired clay and ash	the slight remains of a clay floor in the northern building, used for metal working. A37 B4
123	1261	black and red sandy silt with small bones, and moulds.	occupation deposits within a building, resulting primarily from copper alloy casting in a foundry in the northern building. A12 B3
	1668	black and red sandy silt, moulds and metal droplets.	
	2133	brown sandy silt with birch bark.	
124	1263	laminated lens of ash and charcoal	post hole, containing charred wood, possibly deriving from a burnt post. This is in the northern long wall of the northern building. A66 B3
	1264	post hole, 0.3m dia	
125	1132	double post hole 0.36m dia, 0.48m deep	two large post holes on the same alignment, in a fence line on the southern plot boundary, parallel to the jetty. A23 B3
	1133	post hole 0.28m dia, 0.44m deep	

126	1270	remains of a plank, cut away on both ends by Stolpe, 0.3m wide, by 0.4m long	structural remains in the northern building on the plot. A66 B3
		post hole, 0.15m dia	
	1277		
127	871	post hole	four post holes within the northern building. The massive size of s1367 strongly suggests a pair of major load-bearing posts, while s1167, which is stratigraphically contemporary, is much slighter, and is probably a wall post. A37 B4
	1163	post hole	
	1178	cut and fill for large post hole packed with stone	
	1367	double post hole, with same packing of stones 0.1-0.3m, in a cut 1.1 x 0.8m, and 0.35m deep. The post pipes were 0.44m dia, 0.34m deep and 0.24m dia, 0.32m deep	
128	1707	stones 0.05-0.4m dia., in a rubbishy fill of dark brown silt with fired clay bone and charcoal, the whole in a shallow cut.	stone packing, inside the northern building. The fill included debris from metal working, and burnt stone, so must have been redeposited, probably from the very cut in which the stones lay. A37 B4
129	1390	post hole, 0.45m dia tapering to 0.2m, with a few stones 0.1m large. Set between two stones on the surrounding surface.	post hole inside the northern building on the northern plot. A37 B4
	1412	post or stake hole in same position as s1390	
130	1754	grey brown sandy silt with charcoal, ash and fired clay.	occupation and use layers accumulated within a foundry and respecting a wall line along the southern edge of the group. It is possible that s1986 contains the burnt remains of this wall. A12 B3
	1869	brown black clayey silt, with charcoal and casting waste.	
	1870	red-brown sandy silt, fired clay, charcoal.	
	1873	grey-black clayey silt with clay, ash, charcoal and moulds.	
	1986	burnt wood and fired daub.	
131	2058	stake hole 0.05m dia.	stake holes in the northern wall of the first workshop on the site. A2 B2
	2059	"	
	2060	"	
	2061	small post hole, 0.18m dia.	
132	1992	brown, gravelly silt, charcoal and burnt clay, few bones, or stones	these deposits appear to derive from a disturbed fire layer, probably relating to the destruction or partial destruction of the underlying building represented by g133. A29 B2
	2071	black silt, charcoal, little rubbish	

133	2047	stake hole, 0.08m dia	stake holes forming a wall line,
	2048	"	which turns a right angled corner.
	2049	"	Two small post holes, apparently for
	2050	"	driven posts, without packing,
	2051	small post hole, 0.18m dia	appear to relate to this wall line, both
	2054	stake hole, 0.05m dia	stratigraphically and
	2055	"	topographically, and were probably
	2056	"	the supports for the wattle panelling.
	2057	"	A29 B2
	2058	"	
	2059	"	
	2060	"	
	2061	small post hole, 0.18m dia	
134	2067	laminated grey-black sandy silt, with clay flecks, charcoal, and ash	use and occupation deposits within a building or confined work area. Deriving from the use of the first workshop. A29 B2
135	2113	stake hole/small post hole, 0.09m dia	small post hole/stake hole in the northern long wall line of the southern building on the plot. A2 B2
136	2109	black, laminated sandy silt, with much charcoal and some ash	charcoal layer deriving from metal working activity in the northern building. A29 B2
137	1998	stake hole, 0.06m dia, 0.04m deep.	group of stake holes deriving from a wattle panel, and forming a curved right angle corner. This group may be structurally associated with g271 and g277, which are post holes in the same area. The shape suggests that they may have been a screen or other fixed furniture inside a building. s3709 was in the northern area, but nonetheless appeared to belong to this group. A66 B3
	1999	stake hole, 0.08m dia, 0.03m deep.	
	2000	stake hole, 0.07m dia, 0.04m deep.	
	2001	stake hole, oval, 0.08 x 0.06m, 0.06m deep.	
	2002	stake hole, 0.06m dia, 0.06m deep.	
	2003	stake hole, 0.08m dia, 0.04m deep.	
	2004	double stake hole, 0.15 x 0.06m, 0.04m deep.	
	2005	stake hole, 0.07m dia, 0.07m deep.	
	2006	stake hole, 0.07m dia, 0.06m deep.	
	2008	stake hole 0.04m dia, 0.07m deep.	
138	2137	gravelly brown silt	a southern boundary ditch near to and predating the second jetty foundation g144, and containing three large posts which had been deliberately removed before the permanent occupation of the plot began. A6 B1
	2167	post pipe, 0.2m dia, 0.15m deep	
		"	
	2168	"	
	2169	ditch, curving NW - SE, 1.5m x 0.5m, 0.3m deep	
	2305		
139	EMPTY		
140	2132	brown sandy silt	early fills in the southern boundary ditch. A15 B1
	2149	red-brown sandy-gravelly silt	

141	2281=2298=2299 = 2300=2321 =2323= 2325=2342	dark brown clayey silt with sand, large bones, and iron objects	rubbish layer around and post-dating the foundation stones for the second of the two jettys (g144). A65 B2
142	2289=2341	grey-black sandy silt, wood flecks	rubbish layer around the jetty stones, probably containing remains of a wooden superstructure or surfacing. This deposit shows no evidence of having been trampled, so probably accumulated beneath some type of protective structure. A65 B2
	2295	brown sandy silt, wood flecks, and large bones	
143	2288	white ash, overlying a thin charcoal layer	small, undisturbed fire layers over the jetty. A20 B2
	2293	"	
144	1256	about 30 large stones, <1.5m, set in an open rectangle 4 x 12.5m, oriented NW - SE	secondary jetty foundation. A20 B2
145	2159	grey black sandy silt with large, horizontal bones, fired clay, ash and charcoal	rubbish deposits, primarily domestic, lying over and around the second jetty foundation g144, and probably accumulated underneath its wooden structure. A20 B2
	2292	dark brown sandy silt, large bones, fired clay ash and charcoal	
	2343	brown sandy silt with fired clay and charcoal	
146	1167	flat bottomed post hole, 0.18m dia, 0.18m deep	post holes in the secondary jetty construction. See also g144. A20 B2
	1177	bottom of post hole	
		cut away by Stolpe's excavations	
		packing of ca. 50 small stones	
	2162	<0.25m around a shallow cut, 0.4m dia.	
147	2096=2158	brown-black sandy silt, ash, charcoal, burnt bone	rubbish layer, burnt or containing redeposited burnt, over material, lying within the area of the second jetty. A20 B2
148	1298=1758 =1901= 2016=2111 =2121= 2127=2135	black-brown clayey silt, with charcoal and large, whole bones	rubbish layer which has not been trampled, and probably built up under a wooden structure in the jetty. A22 B2
149	1481	white sandy clay, much ash. brown clay, ash flecks	clayey layers of domestic rubbish, adjacent to the jetty foundations. These deposits could be part of a clay floor containing trampled rubbish, but the degree of compaction may also be the result of modern, i.e. excavation, activity and traffic. A22 B2
	1736	grey-brown sandy silt, with	
	1739	bone, fired clay ash, charcoal and calcite	
		slightly laminated brown clay	
	1750	and ash	
150	1718	dark grey sandy silt, bone and iron corrosion	metal working and domestic rubbish spread. A22 B2

151	1694	five stones, the largest two worn on the surface	sill stones, possible at an entrance in the southern wall of the southern building on the plot. A23 B3
152	1462	black, clayey silt, with much charcoal.	clearings from an industrial hearth. A67 B3
	1657	yellow, calcite, charcoal, ash and iron.	
	1685	black silt, much iron, otherwise relatively empty of finds.	
153	1195	dark brown clayey silt with fired clay, ash and charcoal	clearings from a hearth and other rubbish deposits. A35 B4
	1198	dark grey, sandy silt with ash and charcoal	
	1310	thin, concentrated soot and charcoal layer	
154	1335	water sorted gravel and small stones	eaves drip from an adjacent building. A35 B4
155	1336	pale brown silt, mostlyash, with charcoal.	fill layer, or hearth clearings, interpreted during excavation as deriving from industrial activity. A35 B4
156	1332	brown slightly laminated clayey silt with clay, charcoal, iron, copper alloy droplets, slag and all kinds of industrial waste	activity layers deriving from industrial metal working, apparently primarily copper alloy casting. A35 B4
157	2313	stake hole, 0.03m deep, gravel filled	a group of six shallow stake holes and a small post hole, which form a part of an internal structure in the first large multi-functional building on the northern part of the plot. This is probably, from its position, the edge of a wall bench extending from an entrance in the middle of the southern wall, eastwards along the wall. The remainder of the bench is very damaged by Stolpe's excavations. A66 B3
	2314	stake hole, 0.03m deep	
	2315	stake hole, 0.03m deep	
	2316	stake hole, 0.02m deep	
	2317	small post hole, 0.1m dia, 0.07m deep, filled with gravelly silt	
		stake hole, 0.03m deep	
	2318	stake hole, 0.03m deep	
	2319		
158	1342	brown red clayey silt with charcoal, ash, much metal, particularly iron, moulds and crucibles	domestic and industrial rubbish south of the workshop and north of the jetty/lane. s1342 was initially thought to be directly contemporary with s1332 (g157). This is not stratigraphically possible, but they certainly relate to the use of the same building, and were probably deposited within a very short period of time. A35 B4
	1375	brown sandy silt, much bone, fired clay, ash and charcoal	
	1376	yellow white redeposited ash, with charcoal	
159	1432	Laminated ash, sand, charcoal.	laminated, trampled rubbishy working surfaces in the workshop, i.e. the southern building on the plot. A35 B4
	1553=1300	brown black clayey silt with burnt daub, charcoal, ash, metal, moulds etc - metal-working waste.	

160	1439	hard burnt, yellow-white highly laminated ash	clearings from industrial hearth, relatively finds free. A35 B4
	1441	black laminated charcoal	
	1443	brown black charcoal layer	
161	1438	clean, redeposited grey clay	clay layer, probably the remains of a clay floor and possibly contemporary with/under the occupation deposits in g156. A35 B4
162	1331	clean brown sandy silt	fill layer within the workshop, relatively poor in finds, few bones and stones. A35 B4
	1389	"	
	1436	"	
163	1446	stone packing in compact clean, redeposited ash	stone packing, perhaps at entrance to a building. The material in this deposit probably came from the removal of a hearth.
164	1452	laminated ash and charcoal	clearings from hearth g165.
	1493	hard burnt sand and clay fragments	
	1496	lens of fine charcoal/soot	
165	1499=1500	burnt stones set in orange burnt clay, the two halves of the structure being separated by one of Stolpe's sub-rectangular pits. stake hole, 0.06m dia	this structure in the workshop contained fewer stones than is usual in hearths on this site. The basic form was an oval - sub-rectangular, slightly sunken, clay bowl, 1.3 x 0.7m in size. This had been cut in half by Stolpe's excavations. The associated stake hole suggests an ancillary structure. A35 B4
	1510		
166	1526=1525	fine, clean, redeposited yellow sand	redeposited sand forming a foundation for hearth g165, and also probably, the casting floor associated with the hearth. A35 B4
167	1154=1164=1340	double post hole, set with ca 30 stones 0.05-0.3m, with pipes for two posts of 0.25m dia, 0.22m depth, and 0.35m dia, 0.45m depth	post holes in a wall line. The size and massive construction of s1340 strongly suggest a corner post or other major, load-bearing element. It appears to be a repair to s1445. A35 B4
	1445	bottom of post hole, 0.2m dia, and very shallow	
168	1593	laminated soot, charcoal, and sand, with fragmentary finds. ash lens	working surface and hearth clearings in the foundry, showing evidence of repeated tidying in the form of fine laminations. A34 B3
	1628	charcoal, fishbone, and ash, with few finds.	
	1637	laminated ash and charcoal	
	1644	laminated ash and charcoal	
	1697		
169	1635	clean, yellow-brown redeposited sand	the lack of finds in this deposit, and the fact that it is contemporary with the use layers of g168 strongly suggest that it functioned as a casting floor, or casting box for metal working. A34 B3
	1638	clean, brown, sandy silt	

170	1670	post hole, 0.3m dia, 0.18m deep, filled with redeposited sand	post hole in the northern wall of the workshop. A34 B3
171	1664	post hole, 0.2m dia, 0.14m deep, filled with redeposited ash	post hole in the northern wall of the workshop. A34 B3
172	1659 1660 1662 1663	stake hole, 0.06m dia stake hole, 0.04m dia stake hole, 0.03m dia stake hole, 0.04m dia	stake holes north of a hearth in the workshop, forming an internal wall line, or the line of a fire screen. A34 B3
173	1666	compact ash, much calcite and gravel, in a shallow bowl-shaped depression 1 x 0.6m.	clearing from a hearth, probably outside a building. Possibly, however, results from a process in metal working of which we are unaware. The shape is reminiscent of a hearth. A34 B3
174	1673 1674	grey white redeposited ash, no finds fill of post hole, two stones <0.25m, in sandy silt, in a cut 0.35m dia, tapering to 0.16m, and 0.25m deep	post pipe and corresponding hole in the centre of the foundry workshop. A34 B3
175	1315	redeposited grey sandy clay, with bone	redeposited clay, filling and levelling for a workshop floor surface. A35 B4
176	1709=1691 1751	laminated ash and charcoal laminated orange-white ash, with charcoal	accumulated clearings around an industrial hearth in the workshop. A34 B3
177	1684	cut filled with ash and charcoal, sub-rectangular 0.2 x 0.15m	post hole, or hole left by removed stone in the north wall of the workshop. A34 B3
178	1852	brown black clayey silt, with bone, fired clay, ash and charcoal	domestic and a little industrial rubbish north of the workshop. A34 B3
179	1495 1902 1919	orange ash and clay laminated ash and charcoal "	clearings from an industrial hearth inside the workshop. A34 B3
180	1642 1683 1686 1692 1738	laminated charcoal and ash black sandy charcoal and ash charcoal and burnt clay laminated charcoal and clay black clay, ash, and burnt clay	clearings from a hearth and working debris, accumulated inside the workshop. A34 B3
181	1708	clean, brown redeposited sand	casting sand associated with hearth g182 in the workshop. A34 B3

182	1954	Compact white ash over burnt stones, 0.1m dia, in burnt clay. The original construction was 0.8m wide, and not more than 1.3m long. Of this, only 0.2m survives, the rest having been dug away by Stolpe.	construction and final use of hearth, probably industrial in character, and badly damaged by Stolpe. A12 B3
183	1661 1859 1906 1912 1913 1936 1937 1938 1939 1940 1941	Stake hole, 0.06m dia stake hole, 0.04m deep stake hole, 0.08m dia stake hole, 0.06m dia, 0.03m deep stake hole, 0.06m dia, 0.03m deep stake hole, 0.03m dia stake hole, 0.03m dia stake hole, 0.04 dia, 0.04m deep " " stake hole, half round, 0.06m dia	a group of stake holes forming an amorphous internal wall line in the workshop, possibly a wall bench, or possibly the northern wall. A34 B3
184	1863 1864 1865	stake hole, 0.03m dia , 0.03-0.05m deep " "	a small group of stake holes, with some preserved wood, lying in a line forming a wall or boundary in the northern part of the workshop. A34 B3
185	1729	clean, redeposited grey-blue clay	fill/levelling spread functioning as a floor in the workshop. A34 B3
186	1858 1877	loose sandy silt, much bone, ash, fired clay clay and charcoal. fleck of ash.	industrial rubbish deposits lying in the northern building. A33 B3
187	1935 1945	redeposited yellow white ash, with sand and burnt bone. grey black clayey silt with bone, particularly fish, ash, charcoal and fired clay.	primarily domestic rubbish accumulated during the use of the workshop, and including some industrial waste. A34 B3
188	1924 1927	charcoal, with some bone, and small stones. grey brown clayey silt, with large pieces of charcoal and some bone and stones.	domestic rubbish accumulated in the workshop. As with all the deposits in this area and period, these contain a certain amount of industrial waste. A33 B3

189	1710	dark brown clayey silt with much manure and bone, otherwise few finds. Bounded on the northern side by a wattle fence/wall. A cut for a wall or sill beam leads into the feature from the south-eastern end. This deposit is ca. 0.2m thick, and rectangular, and the floor and use layers of the workshop have built up against it on the northern edge.	domestic rubbish in a very limited area in the south of the workshop. The amount of manure, and the limited amount and nature of the other finds suggests that it might possibly have been an animal pen, or a latrine of some sort. The form, however, and the build-up of deposits on the northern edge suggests the fill of a constructed feature, as does the lack of lamination in the layer, and the intact bones present in it. The bones on the surface, in contrast, are crushed, suggesting use of the surface. In the light of this, it is suggested that this is the fill of redeposited rubbish in a wall bench, which did not have a fixed top surface. Wattle or grass matting lying loose on the surface, or an uncovered surface, would probably have produced this effect. A23 B3
	1829	dark brown clayey silt with much corroded iron and bone.	
190	1557	black brown clayey silt with manure, fragmented bone, slag, molds and crucible fragments	domestic and metal-working debris, very trampled, over the area of the jetty, probably used as a road during this phase. A67 B3
191	1756	charred plank, 0.8 x 0.15m	plank in fence or wall line, directly adjacent to the foundation stones of the second jetty, g144. A23 B3
192	1563	small post hole	row of stake holes forming fence or wall line along the southern edge of the plot, probably the southern wall of the smith's workshop. Possibly contemporary/associated with g287. A19 B3
	1740	stake hole, 0.07m dia,0.05m deep	
	1741	"	
	1742	"	
	1743	"	
	1744	"	
	1745	"	
	1806	stake hole, 0.06m dia, with horizontal traces of wood	
	1807	"	
	1808	"	
	1809	"	
	1810	"	
	1811	"	
193	1730=1798	fragmented, weathered bone, in brown clayey silt, with fired clay, charcoal and domestic rubbish.	domestic rubbish, much trampled, over the southern lane/jetty, open and trafficked during a long period. A22 B2
194	1933	large bones in light brown sandy silt	domestic rubbish, at the eastern end of the northern building, and respecting its wall line. A66 B3

195	1636	laminated brown clayey silt, ash and charcoal.	a laminated clay surface, used and cleaned/repaired over a long period of time, almost certainly a part of a floor in the northern building, though cut away on all sides by Stolpe. A66 B3
	1643	black clayey silt with some bone.	
	1655	light grey redeposited clay lens.	
	1656	light brown silty clay, with much bone.	
196	1440	laminated charcoal, ash, clay.	domestic rubbish accumulated over a period of time after the end of building A66, in the area previously occupied by its eastern wall. This contains material deriving from the episode of burning suffered by A66, and is probably contemporary with its renovation, i.e. A12. A26 B3
	1620	gravel, poorly sorted, possibly by water.	
	1631	light grey yellow ash with some sand and clay.	
	1652	laminated grey ash, with clay, and some bone.	
	1788	black clay, much charcoal.	
197	1600	stake hole, 0.06m dia , 0.01m deep, wood fragments	two stake holes in the northern wall of the workshop. A35 B4
	1621	stake hole, 0.04m dia, 0.03m deep, wood fragments	
198	1347	stake hole, 0.05m dia	a group of stake holes, in similar stratigraphic positions, forming a diffuse line inside the workshop. A35 B4
	1348	stake hole, 0.05m dia, semi-circular	
	1349	stake hole	
	1364	stake hole, 0.06m dia, semi-circular	
199	1312	stake hole, 0.06m dia	a large and rather amorphous group of stake holes, all in a similar stratigraphic position, and forming a diffuse line NW - SE. The balance of probability suggests that these represent more than one phase of construction, but given they were all excavated together. They lie in the workshop. A35 B3
	1318	stake hole, 0.03m dia	
	1319	stake hole, 0.06m dia	
	1320	stake hole, oval 0.08 x 0.06m	
		stake hole, 0.04m dia	
	1321	stake hole, 0.05m dia	
	1322	stake hole, 0.04m dia	
	1323	stake hole, 0.06m dia	
	1324	stake hole, oval, 0.08 x	
	1325	0.06m	
		stake hole, 0.05m dia	
	1326	stake hole, 0.04m dia	
	1327	stake hole, 0.05m dia	
	1328	stake hole, 0.03m dia	
	1329	double stake hole, 0.12 x 0.06m	
	1330	stake hole, 0.04m dia	
		stake hole	
	1394	"	
	1402	"	
	1403	stake hole, 0.05m dia	
	1404	stake hole, 0.05m dia	
	1477	stake hole, 0.02m dia	
	1478		
	1479		

200	1350	stake hole	the interpretation of this group is similar to that of the preceeding group g199, with the same high probability It has been impossible to distinguish precisely which stake holes derive from the building associated with hearth g165, i.e. the latest identifiable structure beneath Stolpe's excavations. A35 B3
	1351	"	
	1352	"	
	1353	"	
	1354	"	
	1355	"	
	1356	"	
	1357	"	
	1358	"	
	1359	"	
	1360	"	
	1361	"	
	1362	"	
	1363	"	
	1364	"	
	1430	"	
201	1442	post hole, 0.12m dia, 0.15m deep, filled with fired clay	post hole in the southern side of the workshop. A35 B4
202	1377	brown sandy silt, few finds, no bone or stone	the relatively clean and finds-free nature of this deposit suggests a redeposited fill layer. It functions as part of a floor in the workshop. A35 B4
203	1309	stake hole	row of stake holes, between 0.05m and 0.08m in diameter forming a wattle panel in the southern wall of the workshop. A35 B4
	1383	"	
	1384	"	
	1385	"	
	1386	"	
	1387	"	
	1388	"	
204	1950	clean, redeposited yellow white ash.	levelling and reflooring deposits within the workshop. A34 B3
205	1907	shallow, sub-triangular cut, 0.25 x 0.2m, probably a post hole	stake hole and post holes in the north wall of the workshop. A32 B3
	1958	shallow oval post hole, 0.23 x 0.15m	
	1961	stake hole, 0.07m dia	
206	1959	orange-white ash, burnt clay and charcoal	clearings from hearth g209 inside the workshop. A33 B3
207	1968	stake hole, 0.04m dia	row of stake holes within the workshop. A32 B3
	1969	stake hole, 0.03m dia	
	1970	stake hole, 0.03m dia	
208	EMPTY		

209	1985	burnt stones ca 0.1m dia, in oval, hard burnt clay surface, 0.7 x 0.5m, two larger stones <0.3m on the northern side slightly damaged by Stolpe's excavations at the eastern end.	small, roughly oval hearth of stones in clay, with two larger stones on the northern side, perhaps a support for bellows. The associated stake holes seem to indicate the usual unidentifiable ancillary structures. A32 B3
		stake hole, 0.05m dia	
		stake hole, 0.08m dia	
	1987	stake hole, 0.06m dia	
	1988	stake hole, 0.07m dia	
	1993		
	1994		
210	1731	stake hole 0.03-0.05m dia.	a row of stake holes 0.03-0.05m dia, spaced at intervals of 0.2m and lying under g189, and not on precisely the same alignment. This is an early southern wall to the workshop. A32 B3
	1732	"	
	1733	"	
	1734	"	
	1735	"	
211	1934	shallow post hole, bounded on the north and south by two stones <0.25m.	post hole in the northern lane. A36 B3
212	1932	brown gravelly silt, with stone and bone.	these deposits seem, from their position, to be use and occupation layers built up on the floor of the workshop. Their character, however, with little lamination, and large finds, suggests redeposition, and they may have been deposited as fill or levelling. A33 B3
	1947	brown black sandy silt, little bone, charcoal, burnt clay.	
213	1953	clayey silt, 0.1m dia stones and gravel, few finds.	fill/levelling layers - may be related to levelling or stone packing for the corner of a building. A33 B3
	1957	gravelly, sandy silt, a few 0.1m dia. stones, few finds.	
214	1967	black charcoal deposit	clearings from hearth. A33 B3
215	1989	brown grey sandy silt with fired clay, charcoal, ash, and fragmented bone	laminated occupation deposits inside a building or work area. A31 B3
	2085	brown grey clayey silt, with charcoal, and fired clay	
	2183	laminated grey clayey silt with ash and charcoal	
216	2108	yellow white, redeposited, water rounded gravel and sand, with flecks of similarly redeposited clay	fill/levelling deposit - functioning as a casting floor inside a metal workshop. A31 B3
	2115	fleck of grey blue redeposited clay	
217	2066	grey brown sandy silt, few bones or finds	levelling/fill layer spread over a large area of the workshop site. A32 B3

218	2072	small post hole, 0.18m dia	stake holes and two small post holes
	2073	small post hole, 0.16m dia	forming the line of a wattle wall
	2076	stake hole, 0.03-0.05m dia	oriented NW - SE, along the
	2077	"	southern wall of the workshop, with
	2078	"	an internal corner at right angles.
	2079	"	A32 B3
	2080	"	
	2081	"	
	2082	"	
	2083	"	
	2087	"	
	2088	"	
	2089	"	
	2090	"	
219	2074	post hole, 0.2m dia, 0.15m deep.	structural elements in a wall line or
		post hole, 0.3m dia, 0.1m deep.	fence line on the southern side of the
	2075	vertical plank, 0.12 x 0.06m,	workshop. A32 B3
		charred.	
	2091		
220	2112	laminated orange and black ash,	this appears to be a primary fire
		soot and charcoal	layer, deriving from the destruction
		grey black, disturbed ash, soot	of a building, judging from the
	2114	and charcoal	charred structural elements in the
		burnt basket or bag	area, and the charred bag or basket
	2120	black, slightly laminated	found here. Some areas of the
	2138	charcoal	deposit are more disturbed than
		fine, black charcoal	others, perhaps from salvage in the
	2171		ruins of the structure. A31 B3
221	2107=2122	grey-black clayey silt	trampled, slightly laminated clayey
	=2285		layer, probably originally a clay
	2180	charcoal fleck	floor. A30 B3
	2251	ash, charcoal, clay	
222	2175	mixed light brown silty sand,	sandy floor layers, strongly affected
		with casting waste and	by casting activity. The bounded
		fragmented bone.	extent of s2197 suggests a cupboard
	2197	gravelly sandy silt, containing	or contained area of some sort,
		the impression of two round	which is supported by the imprints of
		objects - small barrels?	two small barrels or buckets, which
			have stood here one after another.
			See also g273 & g274. A23 B3
223	2188	stake hole	a rather diffuse line of stake holes,
	2189	"	within the northern part of the
	2208	"	workshop. A32 B3
	2209	"	
	2291	"	

224	2207	stake hole	part of the southern workshop wall turning a corner to NE-SW cross wall. A32 B3
	2210	"	
	2211	"	
	2212	"	
	2213	"	
	2214	"	
	2215	"	
	2216	"	
	2217	"	
	2218	"	
	2219	"	
	2220	"	
	2221	"	
	2222	"	
	2223	"	
	2224	"	
	2225	"	
	2226	"	
	2227	"	
	2228	"	
	2229	"	
	2230	"	
	2231	"	
	2236	"	
225	2232	stake hole	a pair of isolated stake holes in the workshop building. A32 B3
	2233	"	
226	2243	stake hole	a group of three stake holes in the workshop building. A32 B3
	2247	"	
	2248	"	
227	2234	stake hole	stake holes forming part of the northern wall of the workshop. A32 B3
	2235	"	
	2249	"	
	2250	"	
	2252	"	
	2253	"	
	2254	"	
	2255	"	
	2284	"	
228	2256	stake hole	a group of three stake holes in the workshop. A32 B3
	2257	"	
	2260	"	
229	2185	stake hole	a diffuse line of 5 stake holes within the workshop. A32 B3
	2186	"	
	2266	"	
	2267	"	
	2311	"	
230	2263	stake hole	an isolated pair of stake holes within the workshop. A32 B3
	2312	"	
231	2181	post hole, rectangular, 0.16 x 0.2m.	double post and stake hole in similar stratigraphic and topographical position in the centre of the workshop. A32 B3
	2184	stake hole.	
	2262	post hole, or possibly a very tight group of three stake holes .	

232	2283	post hole, square, 0.25m per side.	post hole in the centre of the workshop. A32 B3
233	2264	small post hole with three stones in the packing, the whole 0.2m dia.	post hole in the centre of the workshop. A32 B3
234	2265	small post pipe in stone packing with four small stones, the whole 0.15m dia	post hole in the centre of the workshop. A32 B3
235	2268	post hole, roughly square, 0.25 x 0.35m.	post hole in the centre of the workshop. A32 B3
236	2269	post hole, roughly square, 0.17 x 0.2m	post hole in the centre of the workshop. A32 B3
237	2176 2177 2178 2179	stake hole " " "	diffuse group of 4 stake holes in the workshop. A30 B3
238	1273=1392 1435	post pipe, 0.22m dia stone packing, 1.05m dia, with ca 10 stones <0.4m.	large post in massive stone packing in the eastern corner of the site. A37 B4
239	1472	dark brown clayey silt, with charcoal and fragmented bone	possibly an occupation layer in a building? This deposit is cut away on all sides by Stolpe, and extremely difficult to interpret. A37 B4
240	1490 1491	stake hole, oval, 0.06 x 0.04m. stake hole, 0.06m dia.	pair of stake holes in the eastern wall line of the northern building. A37 B4
241	EMPTY		
242	1914	little bone, burnt daub, charcoal in grey brown sandy silt	clearance from a hearth, and industrial debris, perhaps including the remains of a fire screen or other wattle and daub structure. A33 B3
243	1551	bottom of small, rectangular post hole, 0.15 x 0.06m.	post hole beside hearth g165 in the workshop. A35 B4
244	2037	post hole, 0.3m dia	post hole in the northern edge of the workshop area. A35 B4
245	1897	post hole, cut 0.05 x 0.07m, 0.32m deep, filled with ca. 30 stones 0.06-0.2m, post pipe 0.2m dia.	post hole in the northern edge of the workshop area. A66 B3
246	1192	redeposited red-grey ash.	redeposited ash layer in the southern lane. A67 B3
247	1237 1239	black charcoal, soot, iron and bronze corrosion flecks. grey white ash with charcoal, slag, corrosion flecks.	metal-working rubbish deposited outside the workshop. A67 B3

248	1241	black-brown clayey silt.	metal-working rubbish outside the workshop in the southern lane. A67 B3
	1251	ash, crucible and mould fragments.	
249	1226	light grey, redeposited sandy clay, few finds	fill/levelling layer in the southern lane. A67 B3
	1228	"	
250	1252	grey white ash, with charcoal.	laminated ash layers redeposited in the southern lane. A67 B3
	1257	red, yellow, grey andwhite laminated ash.	
251	1203	brown, clayey silt with bone and flecks of clay.	industrial rubbish, with an admixture of domestic rubbish deposited in the southern lane. These layers have been trampled, and lie over the superstructure of the second jetty in this area. It is possible that s1211 and s1210 were deliberately deposited as a sealing layer over the underlying rubbish. A67 B3
	1210	area of redeposited white ash, with charcoal.	
	1211	compact, relatively homogeneous, white ash.	
	1214	brown sand with flecks of clay, and charcoal.	
	1215	brown clayey silt with ash and charcoal.	
	1216	grey brown sandy silt with ash and charcoal.	
	1217	grey white ash, with clay and charcoal.	
	1234	red (burnt?) clayey silt.	
	1268	black grey clayey silt with charcoal, metal-working rubbish, fragmented bone	
	1303	grey black sandy silt, less charcoal than s1268, fewer finds.	
252	1564	post hole containing ca. 10 stones 0.1-0.4m in a barely distinguishable cut. The post pipe was 0.4m dia.	large, probably load-bearing, post hole. A23 B3
253	1370	white grey, slightly laminated silty ash	redeposited ash layer, probably relating to the use of a hearth, but cut away on all sides by Stolpe. A35 B4
254	382	black charcoal and ash with flecks of burnt clay.	undisturbed fire layer, from the destruction of a building. A35 B4
	1397	charcoal with clay lens.	
	1480	lens of clay.	
255	1369	laminated ash, with charcoal.	undisturbed ash layer, this may derive either from the fire layer g254, or possibly from the use and clearance of a hearth. A35 B4
256	384	black clayey silt, much bone.	domestic rubbish, probably deposited within a building, in the eastern end of the workshop. A35 B4
	1434	black layer, lacking description.	
257	383	white redeposited ash	redeposited ash layer in the eastern end of the workshop. A35 B4

258	1406 1464 1502 1527	stake hole orange, burnt, silty sand orange, burnt sandy silt stone packing, c. 10 stones <0.2m dia, in orange sandy silt	a burnt construction - probably part of the eastern wall of the workshop. A35 B4
259	1395 1528	redeposited grey green clay with much charcoal. burnt wattle wall, charred withies.	burnt wattle and daub wall, part of the eastern wall of the northern building. A37 B4
260	1576	post hole, slightly irregular, 0.35m dia, 0.1m deep.	a post hole in the eastern wall of the northern building. A37 B4
261	1492	virtually clean, grey yellow, redeposited clay.	redeposited clay, functioning as a floor within the northern building. A37 B4
262	1504	stake hole, 0.08m dia.	stake hole in the eastern wall line of the northern building. A37 B4
263	1506	brown clayey sand, fish bones and charcoal	domestic rubbish, probably deposited outwith the eastern wall of a building. A37 B4
264	1371=1272 1372	post pipe, 0.25m dia stone packing in cut 0.6m dia, 0.4m deep, with ca 10 stones 0.1- 0.5m.	a large post hole, for major load-bearing post in the eastern gable wall of a building. A38 B4
265	1393 1470	post hole, black sandy silt 0.2m dia, cut in half by Stolpe. post hole, black sandy silt, 0.2m dia.	double post hole, associated with g267 in the construction of the eastern wall of a workshop building. A35 B4
266	1455	virtually clean, redeposited yellow grey clay.	redeposited clay layer, probably the fragmentary remains of a floor. A35 B4
267	1456 1457 1458 1459 1460 1466 1467 1468 1469 1471	stake hole, oval, 0.06 x 0.04m. stake hole 0.03m dia. stake hole 0.07m dia. stake hole, 0.06m dia. stake hole, oval, 0.05 x 0.04m. stake hole, oval, 0.07 x 0.04m. small post hole, 0.1m dia. stake hole, square, 0.04m per side. stake hole, oval, 0.06 x 0.04m. stake hole, 0.09m dia	post and stake holes in a line forming the eastern wall of a metal workshop on the southern part of the plot. A35 B4
268	1501 1503 1505 1508 1509	post hole, oval, 0.2 x 0.3m, wood fragments. stake hole, 0.05m dia. stake hole, 0.07m dia. stake hole, 0.04m dia. stake hole, 0.05m dia	post and stake holes in a wall line, part of the eastern wall of a metal workshop on the southern half of the plot. A35 B4

269	1498	grey green, redeposited clay fleck	fragment of a clay layer, possibly a floor, cut away by Stolpe on all sides. A35 B4
270	1515 1516	stake hole, 0.08m dia. stake hole, 0.06m dia.	a pair of stake holes, possibly part of a southern workshop wall. A35 B4
271	2007	shallow post hole, <0.1m deep	post hole in the northern of the buildings on the plot. A66 B3
272	2010 2011 2012	stake hole, triangular or semi-circular 0.15 x 0.07m. stake hole, 0.08m dia double stake hole, 0.25 x 0.1m.	row of three or four stake holes, possibly part of a wall line or internal feature in the northern of the two buildings on the plot. A19 B3
273	2192	square depression in soil composed of laminated charcoal, ash and decayed wood, cut by g274.	the imprint of a small barrel or box inside a niche or cupboard (see g222 & g274). A23 B3
274	2193	circular depression in soil, composed almost entirely of rotten wood.	the imprint of a small barrel or circular box, inside a niche or cupboard. Post-dates g273. See also g222. A23 B3
275	2092 2093 2094	stake hole " "	three isolated stake holes with the same stratigraphic relationship, inside the workshop. A23 B3
276	2198 2199 2200 2201 2202 2203 2204 2205	stake hole, 0.03 - 0.06m dia. " " " " " " "	group of stake holes from the supports and stakes of a wattle panel in a fence or wall line. A23 B3

277	2013	post hole, 0.2m deep 0.3m dia, half cut away by Stolpe.	stake holes representing two contemporary wattle panels in the northern building, which meet at a right angle corner. A12 B3
	2014	stake hole, 0.06m dia, 0.07m deep.	
	2021	stake hole, 0.05m dia, 0.04m deep.	
	2022	stake hole, 0.08 x 0.06m, 0.04m deep.	
	2023	stake hole, 0.08 x 0.06m, 0.12m deep.	
	2024	stake hole, 0.06m dia, 0.08m deep.	
	2025	stake hole, 0.06m dia, 0.06m deep.	
	2026	stake hole, 0.05m dia, 0.08m deep.	
	2027	stake hole, irregular, 0.12 x 0.05m, 0.02m deep.	
	2028	stake hole, 0.1 x 0.04m, 0.04m deep.	
	2029	stake hole, 0.09 x 0.06m, 0.06m deep.	
	2030	stake hole, 0.04m dia, 0.05m deep.	
	2031	stake hole, 0.1 x 0.06m, 0.05m deep.	
	2038	stake hole, 0.06m deep.	
	2039	stake hole, 0.06m deep.	
	2041	stake hole 0.07m dia, 0.06m deep.	
	2042	stake hole, 0.05m dia, 0.06m deep.	
	2043	stake hole, 0.06m dia, 0.06m deep.	
	2044	stake hole, 0.06m dia, 0.06m deep.	
278	1984	laminated charcoal, clay and silt, with few bones or stones.	debris accumulated on a working surface over a period of time. A 33 B3
279	2035	stake hole, 0.08m dia, 0.04m deep.	two isolated stake holes in the interior of the metal workshop. A19 B3
	2036	stake hole, 0.08m dia, 0.04m deep.	
280	2172	black, charcoal rich, sandy silt, with much large, articulated bone.	domestic (kitchen) rubbish, probably redeposited, as some of the bones lay vertically. A23 B3
281	2173	stake hole, triangular 0.1 x 0.07m, 0.07m deep.	a pair of stake holes in the interior of the workshop. A19 B3
	2174	stake hole, 0.1m dia.	

282	2139	shallow stake hole, 0.05m dia, <0.04m deep	stake holes in a wall line on the southern edge of the workshop. Of these, s2144, s2145, s2147, and s2148 are so shallow as to be only marked by a little wood preserved in the surface of the soil. They are spaced ca 0.2m apart. A2 B2
	2140	"	
	2141	"	
	2142	"	
	2143	"	
	2144	"	
	2145	"	
	2146	"	
	2147	"	
	2148	"	
283	2032	stake hole	group of stake holes, probably in a wall line in the workshop. A30 B3
	2033	stake hole, 0.04m dia, 0.03m deep.	
	2034	stake hole, 0.06m dia, 0.05m deep.	
	2150	posthole	
284	2151	stake hole	a group of stake holes in a wall line in the workshop. A19 B3
	2152	"	
	2153	"	
	2154	"	
	2157	"	
285	2155	the bottom of a square post hole.	shallow cuts for two driven posts, largely worn away/cut away by overlying stratigraphy. A19 B3
	2156	"	
286	1803	post hole, 0.26m dia, 0.2m deep, with post pipe 0.1m dia, 0.7m deep.	sill beams lying in approximately the same line and stratigraphic position. Associated with them is the setting for a driven post s1803, with fragments of oak in the bottom. A23 B3
	1804	Oak charred beam, 1.2 x 0.1m.	
	1831	Unburnt plank, 0.1 x 0.2m with a nail or rivet still in place.	
287	1833	Stake hole, 0.05m dia, 0.06m deep	stake holes in a wall, or more probably a fence line marking the southern plot boundary against the jetty/lane. A23 B3
	1834	stake hole, 0.05m dia, 0.06m deep	
	1835	stake hole, 0.05m dia, 0.06m deep	
	1836	stake hole, 0.05m dia , 0.06m deep	
288	1838	post hole, 0.3m dia, 0.08m deep.	post and stake holes on the southern edge of the plot. A19 B3
	1839	stake hole, 0.05m dia, 0.05m deep.	
	1840	stake hole, 0.05m dia, 0.08m deep.	
289	2161	brown gravelly silt, unlaminated, much bone.	domestic rubbish, rapidly deposited, to the south of the plot. A4 B2
	2278	brown sandy silt, bone and charcoal.	
290	2270	charred beam, oriented NW - SE, 1.2 x 0.1m, cut away by Stolpe at both ends	a sill beam on the southern edge of the plot. A23 B3

291	2271	stake hole, 0.03m dia	stake holes in a wall line, probably part of the southern wall of the workshop. A23 B3
	2272	"	
	2273	"	
	2274	"	
	2275	"	
	2276	"	
	2277	"	
292	2128	post hole, cut 0.18m dia, 0.15m deep, filled with three stones, <0.2m.	post hole and associated stake holes forming the corner between on the northern side of the workshop. A19 B3
	2129	stake hole, 0.05m dia, 0.08m deep.	
	2130	stake hole, 0.06m dia, 0.1m deep.	
293	2117	brown sandy silt, much bone, some of it large and unbroken.	a domestic rubbish deposit in the eastern corner of the workshop. The lack of lamination suggests rapid deposition, as does the relative lack of breakage in the bones. A23 B3
294	EMPTY		
295	1274	stone packing, ca 60l of stone in redeposited green brown clay	stone packing, or possibly the bottom of a destroyed post hole in the eastern corner of the site. A35 B4
296	1289	grey, ashy silt	redeposited clearings from a hearth in the eastern lane. A22 B2
	1760	sandy ash, charcoal and burnt sand	
297	1429	small post hole or stake hole, 0.1m dia, 0.12m deep, wood fragments.	post hole in fence line, or possibly early phase of southern workshop wall. A35 B4
298	1632	layer of wood debris with clay, fired daub, charcoal and ash.	a line of badly preserved wattle, relating, by its position, to the southern wall of the workshop, or to the southern boundary fence of the plot. A32 B3
	1645	wooden stake, 0.04m dia, 0.03m deep.	
	1646	"	
	1647	"	
299	1696	stake hole, 0.06m dia, 0.06m deep.	stake holes in the central part of the workshop. A34 B3
	1700	stake hole, 0.08m dia, 0.16m deep.	
	1701	stake hole, 0.06m dia, 0.04m deep.	
	1702	stake hole, 0.03m dia, 0.02m deep.	
	1703	stake hole, 0.03m dia, 0.06m deep.	
	1704	stake hole 0.04m dia, 0.07m deep.	
300	1944	post hole, cut 0.5m dia, 0.7m deep, filled with ca. 10 stones <0.3m.	post hole in the eastern corner of the site. A6 B1

301	1981	post hole, cut 0.5m dia, 0.7m deep, filled with 12 stones <0.36m, post pipe 0.26m dia, 0.4m deep.	post hole in the centre of the plot, in the southern wall of the northern building. A30 B3
302	1996	mixed clayey silt with ash, charcoal and bone.	domestic rubbish in the northern lane. A36 B3
	2009	mixed clayey silt with ash, charcoal, bone and organic material.	
303	2187	post hole, 0.15m dia, tapering to 0.1m dia.	double post hole. The description of s2338 is missing, but the similarity in size, position and stratigraphic relationships makes it very likely that it is functionally related to s2187. A19 B2
	2338	post hole, description missing, stratigraphic relationships the same as s2187.	
304	2206	rather large post hole, for a relatively small post.	a pair of post holes in the workshop. A19 B3
	2261	rather large post hole, for a relatively small post.	
305	2237	stake hole	stake holes inside the workshop. A19 B3
	2238	"	
	2239	"	
	2240	"	
	2241	"	
	2242	"	
	2243	"	
	2244	"	
	2245	"	
	2246	"	
306	2329=2320	red-brown redeposited sand.	redeposited sand forming the casting floor of the earliest workshop, or levelling, but probably both. A19 B3
	2523	brown silty sand.	
307	2259	relatively clean, laminated ash and charcoal.	working surfaces and 'occupation' deposits built up on g306, and relating to its use, and the use of hearth g309. A2 B2
	2369	laminated dark brown deposit with crushed and fragmented finds	
	2510	grey-white ash lens.	
308	2464	black, charcoal rich, much bird and fish bone.	rubbish layers, primarily domestic, lying south of the workshop, near and around the jetty. A23 B3
	2533	dark brown sandy silt, much bone.	
	2543	dark brown sandy silt, much bone.	

309	2534 2541 2559 4109	0.1 m stones in clay. clean brown redeposited sand s2534. stake hole, 0.05m dia, 0.05m deep. ash, clay and charcoal in a shallow cut.	construction of hearth. Part of this was cut away by Stolpe, and the north-western half lay under the section and was not excavated during 1994, but in 1995. s4109, stratigraphically and topographically, belongs to this group, though it was excavated in great haste at the end of the season in 1995, and was therefore not separated out into individual contexts. A19 B3
310	2454 2459 2462	burnt clay. clean, grey-green, unburnt, redeposited clay. redeposited, waterworn gravel.	construction of hearth, oval ca. 1.2 x 0.7m, and raised. The hearth showed only limited evidence of burning, and appeared to have been used for a very short time. A2 B2
311	2166=2488 =2578 2562 4077 4084 4097	redeposited grey-green clay redeposited sand and gravel fleck of sand fine, light brown redeposited sand coarser redeposited sand.	levelling and floor construction - the sand may function as a casting floor in the earliest phase of the workshop. A2 B2
312	2324 2477	redeposited white ash brown sandy silt, much bone, mostly fragmented	trampled domestic rubbish in the eastern edge of the workshop. A4 B2
313	2502 2554 2561	water deposited gravel. water deposited gravel. water deposited sand with lenses of organic rubbish.	flood deposits underlying the first workshop construction on the plot. A13 B2
314	2297=2563 2302 2567	brown sandy silt, large bones. fine, brown silt. brown sandy silt, large bones.	domestic rubbish layers. The relative lack of weathering and water erosion on the bones suggests that this material was deposited during a relatively dry season - probably summer - on the then shore line, in the unoccupied plot. A4 B2
315	2512 2545	sandy silt, bones and high organic content. as s2512, but more compact.	domestic rubbish layers deposited during a dry season on the shore line. A13 B2
316	2571=2592	dark brown sandy silt, much bone.	domestic rubbish on the shore line. A4 B2
317	2566 2569 2580	gravelly sand with bone. silty sand, with bone. sand and gravel, with iron pan deposits.	flood deposits containing amounts of water-eroded and redeposited rubbish, affected by natural iron pan. A17 B1
318	2591 2598	brown black clayey silt, with wood fragments. brown-black clayey silt wood fragments and bone.	rubbish deposits with remains of wood, possibly wood-chip layer, or it may have been the remains of wattle. A16 B1

319	2555 3962	grey-white ash. white ash.	clearance from hearth g309, and use of floor g311. A2 B2
320	2538 2542	brown-black and white clayey silt, with mould fragments. brown-black and white clayey silt, with mould fragments.	industrial rubbish deposits in the northern lane. These deposits must be contemporary with, or later than, the first workshop on the plot. A18 B3
321	2631 2632	compact, dark brown clayey silt, fewer mould fragments than g320. gravelly, dark brown silt, some moulds, much fired daub.	industrial and domestic rubbish in the northern lane. A18 B3
322	2619	brown clayey silt, relatively few bones.	domestic rubbish south of, the workshop, against the jetty. A4 B2
323	2357 2579	brown sandy silt, bone. grey brown silty sand, bone and domestic rubbish.	domestic rubbish deposits on the lake shore, mixed with flood sands. A17 B1
324	2572	red, black and brown clayey silt, with bone, laminated black organic material, and iron pan.	domestic and organic rubbish on the shore line, affected by iron pan. A16 B1
325	2841 2844	laminated, water deposited sand laminated, water deposited sand	spreads of water deposited sand from periodic flooding, containing bone and other domestic rubbish. A15 B1
326	2791 2792	in situ ash layer charcoal, in situ	not a formal hearth, but given the undisturbed nature of the deposits, probably the site of a small fire. A14 B1
327	2852 2891 2959	fine, yellow white loose sand brown and yellow silty sand grey, loose sand	flood deposits, reasonably well sorted, probably marking the waterline at this point in time. A11 B1
328	3026	gravelly, red clayey silt	fill in northern boundary ditch, apparently flood deposited. A11 B1
329	2776=2936 2990	flood sand and gravel lenses sand and gravel, rubbish lenses.	flooded rubbish deposits, mixed with water deposited sands and gravels. A11 B1
330	2368 3027 3028 3161	laminated sand over jetty foundation. fine gravel, with little clay. laminated sand layer. laminated, water deposited sand.	flood deposits over the plot and around the foundation of the first jetty (g600). A11 B1
331	3043	redeposited grey green clay	clay lining/puddling in the northern boundary ditch. A11 B1
332	3127 3150=3176 3189=3232	water rounded gravel " "	gravel lining/fill in the northern boundary ditch - it is unclear whether this is water deposited, but most probably, it is redeposited. A8 B1

333	2877	light brown gravelly sand, with bone.	flooded rubbish deposits mixed with flood sands and gravel on the shore line. A8 B1
	2878	water deposited sand, stuck together with iron pan.	
	3162	black brown silty sand with gravel and animal bone.	
	3175=3135	black sandy silt, with much gravel, and bone.	
334	3159	slightly laminated, light brown sand.	fills in the northern boundary ditch, probably water deposited, with a certain amount of domestic rubbish, affected by iron pan and flooding. A6 B1
	3160	red and yellow, slightly laminated sand with much bone and some charcoal.	
335	3143	gravelly clay, charcoal flecks.	deposits laid down immediately after the creation of the northern boundary ditch. These include domestic rubbish, and material which drained from the boundary ditch. A6 B1
	3188	gravel, spread out from lower end of boundary ditch.	
336	3180	clay redeposited on the northern edge of ditch, from ditch digging.	construction of the northern boundary ditch. A6 B1
	3302	cut for northern boundary ditch, 0.06 x >2.5m, 0.6m deep	
337	3128	water deposited sand	natural subsoil, with a few, very widely spread, small finds on the uppermost surface. A5 B1
	3130	"	
	3203	"	
	3239	"	
	3259	"	
338	3158	mixed charcoal, clay lumps and sand.	fill in a shallow, rectangular cut 1.2 x 2m, north of the boundary ditch - possibly the foundation of foot path. A6 B1
339	2949	black, organic silt, few bones.	thin layer of organic debris built up at and over the water line. A16 B1
340	2711	stake hole, 0.03m dia, 0.15m deep.	part of a fence line on the northern plot boundary. A10 B2
	2793	stake hole, 0.06m dia, 0.23m deep.	
	2794	plank hole, 0.15 x 0.05m, 0.2m deep.	
	2826	plank hole, 0.12 x 0.04m, 0.21m deep.	
	2827	plank hole, 0.13 x 0.04m, 0.31m deep.	
	2828	plank hole, 0.16 x 0.04m, 0.14m deep.	
	2829	plank hole, 0.1 x 0.03m, 0.22m deep.	
	2830	small ditch, or area of erosion.	

341	3111	stake hole, 0.09 x 0.08m, 0.08m deep.	group of stake holes forming part of an eastern plot boundary. A7 B1
	3181	stake hole, 0.04m dia, 0.12m deep.	
	3194	stake hole, 0.09 x 0.06m, 0.19m deep.	
	3195	stake hole, 0.06m dia, 0.11m deep.	
	3196	stake hole, 0.055m dia, 0.04m deep.	
	3202	stake hole, 0.04 x 0.05m, 0.1m deep.	
342	2647	stone	water deposited stones on the shore line. A16 B1
	2648	"	
	2649	"	
	2650	"	
	2651	"	
	2652	"	
	2653	"	
	2654	"	
	2655	"	
	2676	"	
	2677	"	
	2678	"	
	2679	2 stones	
	2680	stone	
	2683	"	
	2684	"	
	2685	"	
	2686	"	
	2687	2 stones	
	2712	stone	
	2713	"	
	2714	"	
343	3124	small post hole, for driven post, 0.18m dia, 0.14m deep.	a diffuse line of stake holes forming a northern plot boundary. A7 B1
	3125	stake hole, 0.07m dia, 0.08m deep.	
	3126	stake hole, 0.08m dia , 0.04m deep.	
	3129	stake hole, 0.06 x 0.08m, 0.07m dia.	
344	3017	water deposited yellow sand, with much bone.	sand and rubbish deposits probably/possibly accumulated under water. A8 B1
	3077	"	
	3116	"	

345	2953	stone packing of c.10 stones <0.3m dia.	footings for a wooden construction, probably a superstructure, in association with the first phase of foundation stones for a jetty g600. A107 B1
	3015	stake hole, 0.05m dia, 0.05m deep.	
	3138	semi-circular hole for split post, 0.2m dia, 0.15m deep.	
	3139	stake hole, 0.06m dia, 0.07m deep.	
	3140	triangular stake hole.	
	3141	stake hole, 0.05m dia, 0.07m deep.	
	3142	hole for split post 0.2m dia.	
	3146	possible post hole, 0.15m dia.	
	3147	post hole, 0.14m dia, 0.39m deep, wood fragments.	
	3148	post hole, 0.17m dia, >0.6m deep, wood.	
	3149	post hole, 0.1m dia, 0.26m deep.	
346	3065	stake hole, 0.05m dia, >0.3m deep.	stake holes in the area of the earliest shore line, probably deriving from an early boundary line or fence oriented NE - SW, parallel with the water front. A9 B1
	3066	stake hole 0.09 x 0.06m.	
	3067	stake hole, 0.06 x 0.05m, 0.12m deep.	
347	2658	stake hole, 0.08m dia, 0.21m deep.	stake and plank holes forming a part of a fence line on the northern plot boundary. A10 B2
	2659	stake hole, 0.1m dia, 0.1m deep.	
	2661	plank hole, 0.15 x 0.04, 0.16m deep.	
	2662	stake hole, 0.1m dia, 0.2m deep.	
	2664	plank hole, 0.17 x 0.04m, 0.22m deep.	
	2665	plank hole, 0.18 x 0.04m, 0.24m deep.	
	2701	plank hole, 0.16 x 0.04m, 0.48m deep.	
	2716	stake hole, 0.04m dia, 0.14m deep.	
348	2835	stone	stones on the shore line, forming part of a stone packing west of the plot. A64 B1
	2836	"	
	2837	"	
	2838	"	
	2865	"	

349	2848	stake hole, 0.04m dia, 0.1m deep.	stake holes in the area of the northern plot boundary and deriving, in all probability, from earlier, and less strongly built fences and boundary markers than g347 &c. A14 B1
	2850	stake hole, 0.07m dia, 0.06m deep.	
	2856	stake hole, 0.06m dia , 0.09m deep.	
	2857	stake hole, 0.05m dia, 0.09m deep.	
	2858	stake hole, 0.06m dia, 0.12m deep, wood fragments.	
	2859	stake hole, 0.06m dia, 0.07m deep.	
	2860	stake hole, 0.06m dia, 0.07m deep.	
350	2666	stake hole, 0.05m dia , 0.29m deep.	stake and plank holes forming part of a fence line on the northern plot boundary. A10 B2
	2670	plank hole, 0.17 x 0.07m, 0.35m deep.	
	2675	stake hole, 0.09m dia, 0.35m deep.	
	2688	stake hole, 0.03m dia, 0.46m deep.	
	2689	plank hole, 0.2 x 0.04m, 0.42m deep.	
	2690	plank hole, 0.27 x 0.03m, 0,4m deep.	
	2691	plank hole, 0.23 x 0.03m, 0.35m deep.	
	2692	stake hole, 0.03m dia, 0.38m deep.	
	2693	plank hole, 0.22 x 0.03m, 0.35m deep.	
	2694	stake hole, 0.03m dia, 0.12m deep.	
	2697	plank hole, 0.17 x 0.03m, 0.25m deep.	
	2695	stake hole, 0.03m dia, 0.03m deep.	
	2696	plank hole, >0.05 x 0.03m, 0.26m deep.	
	2702	stake hole, 0.04m dia, 0.14m deep.	
	2865	stake hole, 0.055m dia, 0.14m deep.	

351	2660	stake hole, 0.05m dia, 0.1m deep.	posts and stakes in the northern lane, probably functioning as the foundation and support for a corderoy or split log road paving. s2698 and s2699 were at a distance from the rest of the group, but also in the lane, and stratigraphically similar. Their consistent size and great depth, however, raises the possibility that they may be the very bottom of core sample holes dating from 1989/90. Finds from both should be treated with the greatest caution. A10 B2
	2663	stake hole, 0.05m dia, 0.12m deep.	
	2667	stake hole, 0.09m dia, 0.28m deep.	
	2668	stake hole, 0.05m dia, 0.12m deep.	
	2669	stake hole, 0.05m dia 0.27m deep.	
	2671	stake hole, 0.03m dia, 0.05m deep.	
	2672	stake hole, 0.07m dia, 0.1m deep.	
	2673	plank hole, 0.12 x 0.05m, 0.05m deep.	
	2674	post hole, 0.15m dia, 0.44m deep.	
	2698	stake hole, 0.05m dia, 0.15m deep	
	2699	stake hole, 0.05m, 0.33m deep	
	2866	stake hole, 0.05m dia, 0.08m deep.	
352	2511	green brown silty clay, with red iron pan.	flood lenses affected by later iron pan deposits. A13 B2
	2587	lens of iron red sand .	
	2597	same deposit as s2587, but without iron pan.	
353	2705	stone	a group of stones on the beach line. A16 B1
	2706	"	
	2715	"	
	2717	"	
	2718	"	
	2719	"	
	2720	"	
	2721	"	
	2722	"	
	2723	"	
	2724	"	
	2725	"	

354	2862	stake hole, 0.07m dia, 0.07m deep.	stake holes in an early fence line along the eastern plot boundary. This boundary probably marks the initial western edge of the plot to the east of this one. The stone s3134 is just at the end of the northern boundary ditch, and appears to mark the junction between this fence and the ditch. A7 B1
	2907	stake hole, 0.07m dia, 0.27m deep.	
	3063	stake hole, 0.05m dia, 0.04m deep.	
	3091	Stake hole, 0.1 x 0.09m, 0.14m deep.	
	3109	Stake hole, 0.09 x 0.07m, 0.06m deep.	
	3110	stake hole, 0.06m dia, 0.11m deep.	
	3134	flat topped stone 0.5 x 0.4 x 0.2m	
	3253	stake hole, 0.09m dia, 0.12m deep.	
	3254	Stake hole, 0.09m dia, 0.13m deep.	
	3255	stake hole, 0.1m dia, 0.14m deep.	
	3256	stake hole, 0.06m dia, 0.26m deep.	
	3257	stake hole, 0.07m dia, 0.19m deep.	
355	2948	stake hole, 0.04m dia, 0.14m deep, wood fragments.	stake holes in a fence line along the northern plot boundary. A9 B1
	2947	stake hole, 0.04m dia ,0.18m deep, wood fragments.	
	2975	stake hole, 0.05m dia, 0.16m deep.	
	2998	stake hole, 0.05m dia, 0.13m deep.	
	3008	stake hole, 0.04m dia, 0.06m deep.	
	3009	stake hole, 0.05m dia, 0.11m deep.	
	3025	stake hole, 0.04m dia, 0.12m deep.	
	3029	stake hole, 0.04m dia, 0.12m deep.	
	3030	stake hole, 0.04m dia, 0.13m deep.	
	3031	stake hole, 0.05m dia, 0.14m deep.	
	2907=3032	stake hole, 0.04m dia, 0.07m deep.	
	3033		
356	3010	stake hole, 0.06 x 0.04m, 0.14m deep.	a group of stake holes in the southern corner of the site. They belong to early fence lines defining the boundaries of the plot and contemporary with the first jetty, g600. A9 B1
	3011	stake hole, 0.08 x 0.06m, 0.12m deep.	
	3012	stake hole, 0.1 x 0.11m, 0.09m dia.	
	3013	stake hole/small post hole, 0.11m dia, 0.04m deep.	
	3014	stake hole, 0.08 x 0.06m, 0.02m deep.	

357	3037	Stake hole, 0.07m dia, 0.33m deep.	a group of stake holes on the northern edge of the plot. These derive from an early fence line bounding the plot. A9 B1
	3038	Stake hole, 0.05m dia, 0.16m deep.	
	3039	stake hole, 0.05m dia, 0.08m deep.	
358	EMPTY		
359	3072	stake hole, 0.06 x 0.05m, 0.13m deep.	group of stake holes in a fence or wall line along the southern edge of the plot. A9 B1
	3073	stake hole 0.07 x 0.06m, 0.,13m deep.	
	3074	stake hole, 0.08 x 0.06m, 0.14m deep.	
	3075	stake hole, 0.05m dia, 0.06m deep.	
	3061	stake hole, 0.07 x 0.05m, 0.13m deep.	
	3062	stake hole, 0.09 x 0.08m, >0.3m deep.	
	3064	stake hole, 0.07 x 0.05m, 0.16m deep.	

360	2868	stake hole, 0.05m dia, 0.19m deep.	stake holes in a fence or wall line along the southern plot boundary, parallel with the jetty foundations. A9 B1
	2869	stake hole.	
	2880	stake hole, 0.1 x 0.06m, 0.11m deep.	
	2881	stake hole, 0.06m dia, 0.08m deep.	
	2882	stake hole, 0.05 x 0.07m, 0.09m deep.	
	2883	stake hole, 0.06m dia, 0.21m deep.	
	2884	stake hole, 0.04 x 0.07m, 0.11m deep.	
	2885	stake hole, 0.05m dia, 0.08m deep.	
	2886	stake hole, 0.05 x 0.04m, 0.11m deep.	
	2887	stake hole, 0.05 x 0.04m, 0.11m deep.	
	2888	stake hole, 0.06m dia, 0.11m deep.	
	2889	stake hole, 0.06 x 0.04m, 0.11m deep.	
	2890	stake hole, 0.06m dia, 0.32m deep.	
	2896	stake hole, 0.05m dia, 0.1m deep.	
	2897	stake hole, 0.06 x 0.05m, 0.33m deep.	
	2898	stake hole, 0.05m dia, 0.12m deep.	
	2899	stake hole, 0.05m dia, 0.14m deep.	
	2900	stake hole, 0.05 x 0.06m, 0.17m deep.	
	2901	stake hole, 0.06 x 0.07m, 0.09m deep.	
	2902	stake hole, 0.06m dia, 0.1m deep.	
	2903	stake hole, 0.06m dia, 0.12m deep.	
	2904	stake hole, 0.06m dia, 0.28m deep.	
	2906	stake hole, 0.06m dia, 0.23m deep.	
361	2703	stone	stones on the shore line. A11 B1
	2704	"	
	2708	"	
	2709	"	
	2710	"	
362	2540	row of stones, of varying sizes, along the northern plot boundary, the whole measuring c. 2 x 0.4m	sill stones for a wall or other structure. A16 B1
363	2635	stone	stones on the the shore line. A16 B1
	2636	"	

364	2854	plank hole, 0.18 x 0.08m, 0.1m deep.	two plank holes adjacent to the northern plot boundary, which may be the supports for a gate or other entrance. A14 B1
	2895	plank hole, 0.17 x 0.04m,0.14m deep	
365	2921	stake hole, 0.05m dia, 0.06m deep.	a group of stake holes with similar stratigraphic relationships, on the northern plot boundary. A9 B1
	2932	stake hole, 0.04m dia, 0.05m deep.	
	2950	stake hole, 0.1m dia , 0.07m deep.	
	2951	stake hole, 0.05m dia . 0.08m deep.	
	2952	stake hole, 0.08m dia, 0.14m deep.	
366	2832	stone	stones on the shore line, forming part of the eastern edge of a large stone packing which lay predominantly in the northern area. A64 B1
	2833	"	
	2834	"	
	2839	"	
	2839	"	
367	2819	stone	stones on the shore line, forming part of the eastern edge of a large stone packing which lay predominantly in the northern area. A64 B1
	2870	"	
	2871	"	
	2872	"	
	2873	"	
	2874	"	
	2875	"	
	2876	"	
368	2842	stake hole, 0.06m dia, 0.11m deep.	stake holes on the northern plot boundary. A14 B1
	2843	stake hole, 0.07m dia, 0.15m deep.	
369	2639	stone packing, 20 stones <0.4m, in a row oriented NW - SE.	a row of stones on the southern boundary of the plot, adjacent to the jetty - probably sill stones for a wall adjacent to the jetty - probably sill stones for a wall or fence. A16 B1
	2640	single stone, 0.2m, in line with s2639.	
	2641	single stone, 0.15m, in line with s2639, s2640.	
370	2633	row of 7 stones, <0.35m, oriented NW - SE.	the position of this row of stones, parallel with g375 on the northern edge of the plot, suggests that they functioned as sill stones or foundation stones for a wall or other boundary marker. A64 B1
371	2560	Stone	stones on the shore line. A16 B1
	2564	"	
	2636	"	
	2642	"	
	2643	"	
	2707	"	
	2713	"	
	2714	"	

372	2574	wooden stake, 0.05m dia, 0.13m long	a group of decayed stakes, forming the slight remains of a wattle wall in the southern area of the plot, and probably associated with the first workshop. A2 B2
	2575	"	
	2576	"	
	2577	"	
373	2422	stake hole	stake holes forming fence or wall lines along the southern edge of the earliest workshop. A2 B2
	2423	"	
	2424	"	
	2425	"	
	2426	"	
	2427	"	
	2428	"	
	2429	"	
	2430	"	
	2431	"	
	2439	"	
	2440	"	
	2441	"	
	2442	"	
	2443	"	
	2444	"	
	2445	"	
	2446	"	
	2455	"	
	2456	"	
	2457	"	
374	2450	bowl shaped depression filled with laminated ash and charcoal, ca 0.2m dia.	casting bowl or warming hearth for moulds, within the earliest metal workshop. A2 B2
375	2499	stone packing, ca 50 stones <0.4m, oriented NW – SE along the northern plot boundary.	sill stones, or a stone packing associated with a major structure. Very massive, and rather diffuse, for a wall foundation. A64 B1
376	2497	grey brown sandy silt, with bone, and domestic rubbish	domestic rubbish lying over g375 on the northern plot boundary. A66 B3
	2500	"	
377	2531	redeposited grey-green clay.	a clay layer, probably part of a floor, but isolated from much of the archaeology in the Eastern Area, as it is cut away by Stolpe. A19 B3
378	2634	stone	stones in the southern wall of the earliest workshop, functioning as post pads. A2 B2
	2636	"	
379	2600	post hole, with charred wood, 0.03m deep.	a diffuse fence line near the northern plot boundary. A9 B1
	2601	stake hole, 0.05m deep.	
	2602	"	
	2603	"	
	2604	"	

g380-g919 NORTHERN AND SOUTHERN AREAS

920	1010	white ash, with fired clay, and large bits of charcoal.	fragmentary, burnt structural remains, cut away on both sides by Stolpe's trenches, and thus difficult to interpret. Probably, given their position in relation to underlying structures, this group derives from the destruction of a building (possibly a workshop) by fire. A41 B4
	1014	burnt red clayey silt.	
	1018	two or three charred horizontal planks.	
	1055	white-grey in situ ash.	
	1126	charred wooden beam oriented north-south.	
	1130	in situ white ash with charcoal.	
921	1023	brown clayey silt, with much bone and charcoal.	lenses of domestic rubbish underlying the structural remains of g920, and possibly deriving from the use and occupation of the same building. These deposits built up on floor level g922. A41 B4
	1030	yellow white ash laminated with charcoal.	
	1033	brown clayey silt, with lenses of ash and clay.	
	1053	charcoal layer, redeposited.	
	1054	brown, sandy silt.	
	1058	brown sandy silt with much bone.	
	1060	grey white redeposited ash with burnt bone.	
	1061	brown clayey silt with much bone.	
	1076	fine, grey clayey silt with ash, fired clay and charcoal.	
	1141	dark grey clayey silt with organic (wood) fragments.	
922	1056	burnt, orange redeposited clay	the burnt remains of a clay floor, probably from the building represented by groups 920 and 921, and equally difficult to interpret with any certainty, due to disturbance by Stolpe's excavations. The group also includes an post setting which relates stratigraphically to the floor. A41 B4
	1127	compact red and grey redeposited clay layer.	
	1128	grey clayey silt.	
	1131	stake hole, 0.1m dia., 0.15m deep.	
	1135	grey and orange redeposited clay, partially burnt	
	1138	grey and orange redeposited clay, partially burnt.	
	1149	black and orange burnt sandy silt	
	1173	light grey silty ash	
923	1051	black brown sandy silt with ash and charcoal	a group of domestic rubbish layers, cut away on all sides by Stolpe's trenches, and probably related to the occupation of building groups 920-922. A41 B4
	1057	yellow white ash, with charcoal	
	1059	black sandy silt with fired clay, bone, ash, charcoal.	

924	880	post hole	four post holes forming a tight group, cut away on all sides by Stolpe's excavations, but probably marking the wall line of a relatively late phase of the northernmost of the two buildings on this plot. A25 B4
	886	bottom of double post hole.	
		post hole	
	926	post hole	
	997		
925	873	orange brown burnt sandy silt with ash and charcoal.	rubbish layers and working surfaces cut away on all sides by Stolpe's excavations, but within the area of a building. The entire group lies under a hearth (s828), and is contemporary with g924, but later than g926. The damaged nature of the deposits, however, makes a functional interpretation difficult. The finds from this group clearly indicate that metal casting was carried out in this building. s1156, which appears to be a mixture of clay and clean ash, may have been a floor layer upon which all these activity layers built up. A25 B4
	878	dark brown sandy silt, with ash and charcoal.	
	924	brown sandy silt with lumps of clay.	
	936	black brown clayey silt with stone, sand, casting waste.	
	980	orange brown sandy silt with wood, charcoal, fired clay	
	995	black brown sandy silt with clay and wood fragments.	
	996	grey black clayey silt with bone, fragments of iron and copper alloy and moulds.	
	1156	clayey silt, light pinkish brown, with some bone, probably from the underlying layer.	
926	1143	dark brown clayey silt, with sand, bone, ash and charcoal.	activity layers under floor g922, deriving from the occupation of floor g929, in the southern of the two contemporary buildings on the plot. A41 B4
	1150	grey brown clayey silt, with bone, ash, fired clay and charcoal.	
	1212	black sandy silt with ash and charcoal.	
	1213	white ash, with charcoal.	

927

1067	dark brown clayey silt with bones and gravel .	rubbish layers over the jetty, which probably built up during the use of this area as a road. These deposits contain a mixture of domestic and industrial waste, rapidly accumulated, and showing varying degrees of fragmentation. All the layers are very small, and the majority are cut away on all sides by Stolpe's excavations.
1071	dark brown clayey silt with much bone.	
1073	loose brown sandy silt with much bone.	
1086	brown silty humus, possibly a vegetation horizon.	
	grey brown ashy sandy silt.	
1089	black brown clayey silt with ash	
1137	and charcoal.	
1139	brown clayey silt with copper alloy casting debris.	Because of their lack of stratigraphic links to the surrounding archaeology, it has not been productive to subdivide these deposits into smaller groups on the basis of functional or source differences. The high risk of contamination all the contexts carry provides an additional reason for treating them as one group.
	light grey clayey silt with	
1140	ash, fired clay and charcoal.	
	redeposited clay, with charcoal and ash.	
1144	loose, grey brown sandy silt with ash, charcoal and fired	
1150	clay.	
	brown sandy silt with much bone.	Contexts s1184, s1191, and s1209, although not forming a continuous layer, were of such similar character that they must all have derived from the same source. It seems likely that that would have been an industrial process, but what process is unclear. The strong red colour of the deposits was unlike anything else on the site. A67 B3
1153	compact, grey brown clay and sand.	
1155	red brown, burnt clay.	
	redeposited grey ash with	
1157	charcoal.	
1159	redeposited grey whiteash with charcoal.	
1161	grey brown sandy silt with ash and bone.	
1162	grey white ash with charcoal.	
1165		

927 cont.	1168	light brown sandy silt with coprolites, fired clay, clay, ash and charcoal.	
	1169	thin spread of charcoal and soot.	
	1171	brown sandy silt with ash and charcoal.	
	1172	black brown sandy silt with bone and moulds.	
	1174	brown sandy silt with much bone.	
	1175	loose brown sandy silt with much bone.	
	1176	spot of grey, redeposited clay. redeposited grey clay.	
	1179		
	1181	white ash.	
	1182	brown sandy silt with much bone.	
	1184	dark red sandy silt.	
	1186	white ash, with fired clay and charcoal.	
	1187	grey gravelly clay with ash and charcoal.	
	1188	very mixed rubbish layer - clay, fired clay, bone, ash, charcoal and casting waste.	
	1189	white ash.	
	1190	brown grey clayey silt with coprolites.	
	1191	dark red sandy silt.	
	1193	redeposited blue-grey clay. loose brown sandy silt	
	1199	collapsed between the underlying stones of the jetty.	
	1208=1190	brown grey mixed rubbish layer. dark red sandy silt.	
	1209	redeposited, red, hard burnt	
	1817	sandy silt, with no finds.	
928	1158	dark grey brown sandy silt with ash and charcoal.	activity layers with metal working waste in the northern building on the plot. These deposits contained substantial amounts of metal working debris, both copper alloy and iron, and moulds. A25 B4
	1160	black clayey silt with metal working waste, fired clay ash, and charcoal.	
	1170	black clayey silt with metal working waste, fired clay, ash and charcoal.	
929	1180	light brown silty clay, with ash, charcoal and fired clay. post hole 0.2m dia, 0.2m deep.	remains of a casting floor in the metal workshop, stratigraphically associated with a post hole for the same building, but badly damaged by Stolpe's excavations. A41 B4
	1183	clean, red brown sand	
	1194		

GROUP DESCRIPTIONS FOR THE SOUTHERN AREA

g-nr	s-nr	s-unit description	group interpretation

380	644 653	ash, and charcoal, laminated. ash, burnt stones <0.2m, set in an oval layer of clay 1 x 1.5m.	s644 consists of laminated ash and charcoal deposits which had built up over a hearth (s653). Hard burning had affected the stones in s653, which were shattered and crumbled from the heat. One large stone, 0.3m, survived at the northern end of the structure, in a packing of ten smaller stones, and a few small stones outlined the edge of the hearth, and the southern end. The large stone may have functioned as a support for supplementary constructions, for example a spit, or as a pot rest. A60 B8
381	647 650 652	small pit filled with stones. spread of stones. spread of stones, ash and charcoal.	plough damaged features, difficult to interpret and probably dating from more than one period. These are not sealed deposits, and finds from these contexts must be considered to have a very high risk of contamination. A60 B8
382	640 646 656 659 1094 1547	unburnt wood remains. unburnt plank. post hole, stone filled, 0.4m dia. post hole, stone filled, 0.7m. post hole. cut and stone packing for post hole s656	s640 contained large amounts of very fragmentary and badly preserved wood flecks, with no clear orientation. As it lay immediately over s646, which was an unburnt, badly preserved wooden plank, or beam, it is likely that s640 represents the remains of a wooden structure in association with s646. s656 and s659 are stratigraphically and physically closely associated with s640 and s646, forming what appears to be part of a wall, probably constructed in 'skiftesverk' technique, i.e. planks slotted horizontally between vertical posts. s1094 is a stone filled post hole which lay stratigraphically lower than s656 &c, but because of its position is virtually certain to be the lower part of post hole s659, and was thus grouped here. A58 B8
383	631 648 658 672	disturbed deposit, containing bones, ash, charcoal in sandy silt. a concentration of displaced stones in the southern part of the southern plot. displaced stones, concentrated around the area of the southern lane between the two plots. area of stones in the southern lane.	the lower part of the topsoil, consisting of plough damaged archaeological deposits, impossible to interpret. A60 B8

384	635	grey brown sandy silt, with much bone.	fills of domestic rubbish in a late, narrow ditch, 0.35m wide x 4m long, immediately under the top soil, on the southern side of the lane running NW - SE between the northern and southern plots. A60 B8
	636	bone rich sandy silt.	
385	664	flecked, ash, charcoal, red sandy silt.	layers of sandy and clayey silts, varying in their amount of stone, animal bone and other finds, but containing much ash, charcoal and burnt stone. Generally disturbed and redeposited, and deriving from levelling after a major fire. s765 is included in this group, despite its missing description, because its position over the undisturbed fire layers of g393 suggests that it must belong to the levelling of the plot, or to the fire. Given the uncertainty, it is safer to assign s765 to the higher, and more disturbed, of the two groups. A59 B8
	750	grey-white ash.	
	765	no description.	
	887	black clayey sand, with much charcoal.	
	899	brown clayey silt with charcoal.	
	901	dark brown sandy silt with fired clay, ash and charcoal.	
	902	grey-white ash and burnt stones.	
386	699	post hole, 0.3m dia, packing 17 small stones.	these contexts consist of four large post holes, all stone packed, with fills of burnt material, particularly s745, which was filled with orange 'burnt turf' sandy silt (see g387 for discussion of this). The size of the post holes suggests that they were for load-bearing posts, pipes in all three suggest that the remains of the posts were pulled up after a fire, with consequent disruption of the stone packings. A58 B8
	741	post hole, 0.2m dia, 0.15m deep, one packing stone.	
	745	post hole, 0.6m dia, packing of 1 large stone.	
	884	post hole, 0.5m dia, 0.3m deep, packing of 2 large stones, no post pipe.	
387	643	red sandy silt, few finds.	The degree of lamination in these deposits suggests a relatively undisturbed, in situ fire layer - the red sandy silt probably represents the remains of a turf roof. This type of burnt turf deposit has been identified in destruction deposits in several Early Mediaeval towns in Scandinavia, where it is generally limited to the extent of a burnt building, is relatively poor in finds, and is of a characteristic red-orange-brown colour (K Svensson, pers. comm.). Such deposits at Birka conform to the pattern observed elsewhere, and will not be further discussed in detail when they recurr. A59 B8
	749	in situ charcoal and ash.	

388	687	redeposited grey-green clay.	s687 consists largely of unburnt clay, with small amounts of burnt clay, and is spread over a stone packing (s693) which is ca 0.5 x 1.7m in extent and irregular in shape. The whole is covered by a superficial deposit of sand, and charcoal, with burnt clay deriving from s687. The form and slight degree of firing indicate that this is probably not a hearth, and its location suggests the possibility that it may be either a reinforced foundation for the gable end of a building, or perhaps a paving for an entrance or hard standing, with the charcoal and burnt material resulting from the destruction by fire of associated structures. A58 B8
	693	stones of varying size.	
	694	sand, burnt clay and charcoal.	
389	674	light grey silt, with clay, ash and charcoal.	This spread of redeposited, and relatively find free clay covered the whole extent of the lane between the northern and southern plots to a depth of 0.1 - 0.15m. It was clearly a resurfacing of the lane, and seals deposits rich in articulated bone and other unpleasant domestic rubbish. The smooth, untrampled surface of the clay suggested that there may have been an overlying paving, probably of wood, which did not survive. A120 B8
	676	brown grey silty clay.	
	677	redeposited grey-green clay.	
390	908	stake hole	This group contains 10 stake holes, with ash and charcoal fills, but no preserved wood or structural charcoal. Their diameters were consistently 0.08-0.09m, and their spacing ca 0.2m from each other, in a straight line. It is not immediately clear whether this group represents a wall line, or a fence line. A56 B7
	1104	"	
	1105	"	
	1106	"	
	1107	"	
	1108	"	
	1109	"	
	1110	"	
	1111	"	
	1112	"	
391	756	mixed charcoal and ash rich sandy silt, few bones.	a disturbed fire layer - probably deriving from levelling after a fire. A59 B8
	781	"	
392	816	charred beams and plank fragments.	g392 contains the sill beams for a wooden floor, with fragments of the planking from the floor itself. The sill beams were made of a variety of types of wood, which suggests either a lack of interest or knowledge of the various characteristics of different woods, or, more probably, a local shortage of wood and lack of choice. A58 B8
	945	description missing.	

393	835	laminated black, brown and orange sandy silt.	the lamination of the s-units in this group, and the amount of orange sandy silt (see g387 for discussion) in it, indicate an undisturbed deposit resulting from the burning and collapse of a building with a turf roof. A57 B7
	848	"	
394	858	0.1m dia stones set in clay.	s858 is an oval burnt clay layer, orientated NNW - SSE, 1.8 x 0.95m in size, packed with stones ca 0.1m in diameter. The south-eastern end contained a shallow pit filled with ash. Under the whole lay another stone packing, and clay, which was less evenly burnt, but still hard burnt in the centre. An ash and charcoal spread (s973) underlay the whole, and may represent the earliest phase of this hearth. A56 B7
	973	second layer of stones in clay, less burnt.	
395	972	brown sandy silt, mixed with ash.	These deposits showed superficial effects of fire, but did not consist primarily of burnt material. They contained domestic rubbish, and were slightly laminated, and may have derived in combination from the levelling for, and use of the overlying building. Their extent was limited by the extent of the building. A56 B7
	978	brown-black sandy silt, showing some effects of burning on the surface.	
	1012	extension of s972, but less compact and affected by heat under area of wall bench.	
396	665	burnt stones and gravel under s666.	a roughly rectangular construction, c. 1.2 x 0.6m, oriented NW - SE of burnt clay and fine gravel packed over a layer of 0.1m dia. stones. The stones were shattered and crumbled from heat, but not completely destroyed. The whole is the construction phase of a hearth. A58 B8
	666	0.1m dia stones set in burnt clay.	
	669	stake hole, 0.08m dia.	
397	1113	stake hole	an irregular right-angled line of stake holes, all ca. 0.08m dia, oriented north and west, and spaced between 0.15 and 0.2m. These are divided from g390 by a gap where a later post hole has cut the line, but are stratigraphically contemporary and form part of the northern long wall, and internal dividing wall of the same building. A56 B7
	1114	"	
	1115	"	
	1118	"	
	1119	"	
	1122	"	
	1123	"	
	1124	"	
398	649	stone spread.	these layers represent the collapse and levelling of an underlying building - s649 derives from a structural feature in this building. The deposits are disturbed, possibly by attempts to retrieve useable wood or artefacts from the building, which was destroyed by fire. A57 B8
	776	mixed burnt clay, ash, and charcoal.	
	895	Orange-grey, flecked sandy silt.	

399	1019 1029 1078 1079	grey clay, and ash grey-brown ashy, sandy silt, few bones and stones. mixed ash, sandy silt, charcoal. grey-white ash, disturbed or redeposited.	g399 also derives from the collapse and levelling of the underlying burnt building. This group is also very mixed, as a result of post-depositional disturbance. A57 B7
400	903 906 907 920 941 1016 1085	ashy, light brown sandy silt. light grey, ashy mixed layer with fired clay and charcoal. grey ash layer with fired clay and charcoal. grey brown, flecked sandy silt. yellow-white ash fleck. grey ash, flecks of brown sandy silt. lenses of many-coloured ash.	these deposits, also fire layers, are somewhat less disturbed than are groups 398 and 399, but they derive from the same event. A57 B7
401	1653	<0.3m dia stones in clay and associated ash deposits.	an irregular hearth, built of stones packed with clay, later hard burnt. The whole is oval in form, and ca 0.6 x 0.8m in size, with diffuse edges, and rather large stones. A56 B7
402	786 799	orange sandy silt. brown black sandy silt, much charcoal.	these spreads are of the fine, relatively find-free sandy silt, coloured orange and brown black by burning, which commonly seem to derive from the destruction of a turf roof. A57 B7
403	1097	wooden lining in a ditch.	fragmentary remains of charred planks, along the edge and side of a narrow ditch ca. 0.3m wide, 0.25m deep, parallel with g390/397. These appear to be a lining associated with the construction of the ditch, probably to prevent the ditch eroding back into the immediately adjacent wall line. A56 B7
404	1579 1633	red brown sandy clay. burnt clay, less colour variation.	burnt turf and clay deposits, which by their distribution and soil types could relate to the destruction of the same roof as g402. A54 B6

405	1649	undisturbed ash layer associated with s1650.	this hearth consists of a rectangular packing of stones <0.1m dia, in secondarily burnt clay, associated with an ash layer which lies partially over, partially under the construction. This ambiguous stratigraphic relationship probably indicates an earlier phase of use to the hearth, with s1650 being a renovation. Intense heat appears, in some hearths, to blur the interfaces of ash deposits, so it is not inconceivable that s1649 is actually two layers. A56 B7
	1650	stone packing set in clay.	
	1651	stake hole	
406	1580	stake hole, 0.08 x 0.06m, 0.09m deep.	a group of stake and post holes, forming a diffuse wall line at the south-eastern end of the building represented by g390/397. This would be the gable wall, if it were a gable construction, but the slight construction suggests that the load was not carried on the walls of this building. A56 B7
	1581	stake hole, 0.08m dia, 0.08m deep.	
	1586	stake hole, 0.07m dia, 0.07m deep.	
	1587	stake hole, 0.08m dia, 0.07m deep.	
	1588	stake hole, 0.06m dia, 0.02m deep.	
	1589	stake hole, 0.04m dia, 0.02m deep.	
	1590	stake hole, 0.07m dia, 0.03m deep.	
	1591	stake hole.	
	1595	post hole, 0.13 x 0.08m, 0.06m deep, with charred wood.	
		stake hole.	
	1641		
407	1908	2 charred beams, ca. 0.4 x 0.4m.	the stratigraphic position of these structural elements makes their interpretation slightly difficult. During excavation, they were initially interpreted as a part of a collapsed roof, but it is equally possible that they actually derive from a wall bench or wall. A61 B6
	1910	charcoal layer.	
408	1084=1654 =1038	grey brown sandy silt , little bone.	g408 contains burnt material deriving from the underlying burnt building, mixed with domestic rubbish. It is confined, however, to the area of a building, i.e. A56, and must be interpreted as a deliberate levelling directly related to the construction of the building. A56 B7
	1511	black-brown sandy silt, charcoal and bone.	
	1555	brown sandy silt, large, unfragmented bones.	
	1753	black-brown, sandy silt with whole bones.	
409	1737	very mixed, clay, sandy silt, ash, charcoal.	deposits of domestic rubbish, which accumulated during a period after a fire on the plot, and probably while the plot was unoccupied for a time. The traces of wood in s1812 and s3307 suggest that wood chips may have been laid over the surface, or part of the surface. A54 B6
	1773	local ash layer.	
	1802	homogeneous brown sandy silt.	
	1812	domestic rubbish, with traces of wood.	
	3307	domestic rubbish with traces of wood .	

410	1801 1813 1815 3313	stone packing. post hole post hole post hole, 0.5m dia.	post holes and a stone packing along the long axis of a building. The substantial size of these, and their position in relation to the rest of the building (A56) strongly suggests that they carried the ridge beam and the majority of the load from the roof. A56 B7
411	1830 1875	redeposited ash "	local layers of redeposited ash, deriving from clearance from a domestic hearth. A54 B6
412	1011	in situ ash, containing charred wooden construction.	this deposit, as drawn, is ambiguous. It is possible that it represents the remains of an overlying hearth in the area, but given its relationship to g405, it seems more likely that this is the uppermost evidence for that hearth. It appears to have had a wooden surround, which is unusual, and the charred wood may therefore be the remains of a wooden floor. A56 B7
413	1814 1821	grey white redeposited ash, with much stone <0.3m dia . grey brown sandy silt, mixed.	Stone packings containing much domestic rubbish, and forming the north-western end wall of the more westerly of the two buildings visible on the plot. A61 B6
414	1929	brown-black sandy silt, little bone.	a charcoal rich deposit deriving from a house fire. A54 B6
415	110 882=809 885 921 923 1755	no description sheet, but from the other associated descriptions, a fill in a foundation trench coarse sand, well sorted (eaves drop). clayey silt, grey ash. sand, ashy clay, fired clay and stones. sand and stones packed in a shallow trench. small area of yellow white ash.	Excavation for northern wall line, and associated eaves drop - the position of the eaves drop over the foundation trench of the short wall of this building may possibly indicate a hipped roof. A58 B8
416	891 892	post hole ca 0.4m dia, 0.15m deep. post hole ca 0.6m dia depth unrecorded, with space inside the packing for a post ca 0.3m dia.	two post holes in wall line. A58 B8

417	961	brown sandy silt, bone and other domestic rubbish, compact and difficult to distinguish from the underlying surface.	domestic rubbish, probably accumulated relatively rapidly, and over a large surface. This may derive from a period of abandonment or low use of the plot, rather than having accumulated within a building, as it is not laminated to any great degree. A57 B7
418	1871 1917	redeposited grey-white ash. "	redeposited ash layer - clearance from a domestic hearth. A62 B6
419	1915 1918 1922	grey sandy silt, few finds. brown sandy-gravelly silt, few finds. brown sandy silt, few finds, charcoal.	levelling deposits, possibly topped by natural humus which developed under vegetation. A62 B6
420	946 954	description lacking "	this group is not possible to interpret with any certainty, but from its location, may be rubbish between the two houses on the plot. A57 B7
421	1923 1926 1928	orange sandy silt. grey ashy, sandy silt. orange sandy silt, mixed with ash.	a relatively undisturbed fire layer, relating to an underlying structure. A62 B6
422	1823 1827	white-orange sandy silt. charcoal and black sandy silt.	a fire layer, apparently relating to g413, and possibly deriving from the destruction of that structure. A61 B6
423	1748	small shallow cut, 0.5 x 0.1m, filled with fired daub.	a small ditch forming part of the construction of the northern long wall of a building on the southern part of the plot, and largely outwith the excavated area. A61 B6
424	1903 1904 1905 1909 1911	stake hole, 0.07m dia, 0.13m deep. stake hole 0.06m dia, and 0.09m deep. post hole, 0.22m dia, tapering to 0.14 x 0.09m, with a depth of 0.16m. fill in cut for s1911. charred stake, 0.07m dia.	posts and stakes in the construction of a house, forming the northern long wall of building A61, and contemporary with g413. A61 B6
425	1828	thin, brown, charcoal rich clayey silt.	compact and apparently trampled and/or levelled surface, possibly the construction level for a house (g424, g413&c). A61 B6
426	837 912	brown-grey, loose sandy silt and ash fill in ditch. grey brown sandy silt with charcoal, ash, fired clay &c, disturbed.	disturbed deposits deriving from the levelling and clearing of structures on the plot after a destructive fire. A57 B7

427	1578	redeposited grey-white ash.	fills in a ditch, 4 x 0.4 x 0.3m, parallel with the northern long wall of the building formed by g390/g397 &c. These fills are probably contemporary with the use of the building, but might also derive from its destruction by fire. A56 B7
		"	
	1583	"	
	1584		
428	859	loose brown sandy silt, bones and stones, grey ash.	domestic rubbish in the lane between the plots. A119 B7
429	1100	virtually no soil, only loose large bones and stones.	domestic rubbish in the lane between the plots. These spreads of rubbish contain large, relatively intact pieces of animal bone, which indicate that the surface was not subject to heavy traffic. The looseness and lack of lamination of the soil matrix may, in places, reflect underlying collapse, but seems to be characteristic of the whole group, and therefore suggests rapid accumulation. A44 B6
	2355	brown sandy silt, with intact animal bone, and stones.	
	2367	brown sandy silt, with fired clay, animal bone and charcoal.	
	2373	loose, brownish grey sandy silt with large pieces of animal bone, and heat shattered stone.	
430	1529	post hole, oval 0.18 x 0.16m, 0.2m deep.	structural elements forming a wall line in the building also consisting of g390/g397. A56 B7
	1530	horizontal plank, charred, 0.28m long, 0.08m thick and 0.08m deep.	
	1560	stake hole, 0.06m dia , 0.05m deep.	
	1623	stake hole, 0.07m dia, 0.05m deep.	
	1624	stake hole, 0.08m dia, 0.04m deep.	
	1625	stake hole, 0.,06m dia, 0.03m deep.	
431	3305	red and white ash, burnt daub, and charcoal.	layers relating to the destruction and levelling of an underlying building. A54 B6
	3335	brown - white, ash, charcoal, disturbed.	
	3338	grey white redeposited ash.	
	3339=3361	brown - white, ash, charcoal, disturbed.	
	3359	"	
432	3367	in situ ash.	this hearth covers an area ca 0.9 x 1.2m and is subrectangular in form. The clay foundation has been laid first on a layer of gravel, then a roughly oval setting of ca 20 stones <0.3m in size has been built in the centre of the clay forming the fireplace. It appears to have been a corner hearth, in the angle of two wall benches (see g435 &c) with the stake and post holes representing either a smoke hood, or a pot hook or spit support. A52 B6
	3372	stake hole.	
	3376	"	
	3380	clay with small, burnt stones.	
		post hole.	
	3389	stone fill in cut for s3389.	
	3396	gravel layer under s3380.	
	3397		

433	3308	spread of stones	stones dragged up from an underlying hearth in the process of levelling a burnt house. A54 B6
434	3363 3370 3410	brown sandy silt with charcoal and a little bone. black, charcoal deposit. brown-red sandy silt.	fire layers, showing a degree of lamination, with little domestic rubbish and many large pieces of charcoal. These deposits are probably in situ. A52 B6
435	3439 3452	burnt beam/split log of fir, 0.7 x 0.15m. post hole, cut 0.8m dia and 0.36m deep, post pipe 0.4m dia, packing ca 50 stones 0.1-0.32m in size.	although s3439 was initially interpreted as a sill beam for a gable line, it is possible that it may be a sill for a wall bench instead (see discussion for A46). The post in s3452 appears to have been a major, load-bearing corner post. A49 B6
436	3332 3336 3362	orange sandy silt, with ash. grey sandy silt, ash. grey sandy silt, large pieces of charcoal.	deposits deriving from the destruction of a building, relatively undisturbed, and including, in s3332, the probable remains of a turf roof. A53 B6
437	3399 3405	in situ ash layer over a hearth. brown-grey, sooty, silt, few, fragmented finds.	in situ deposits relating to, and limited by, the floor of a building. These layers are contemporary with the use of hearth g432. A52 B6
438	3400 3407	burnt clay layer . underlying stone foundation.	construction of hearth immediately under g432. The clay is packed into a slight depression, sub-triangular in form, and filled with stones 0.05-0.1m in size. The upper stones are slightly burnt, but the lower, and the lower part of the clay, are unburnt. The whole is ca 0.8m long and 0.5m wide at the widest part, with a depth sloping from 0.05m at the narrow end, to 0.1m at the wide end. A49 B6
439	1517 3316=3358 3401 3404 3444 3471	charred sill beam burnt sill beam, oriented NW-SE. burnt sill beam. " row of sill stones. sill stone.	structural details from a building, preserved by charring following its destruction by fire. s3444, and s3471 are sill stones for the long walls, while the charred wood fragments derive from sill beams for a cross wall (s3316=s3358) and floor (s3401 and s3404). A49 B6
440	3304 3364 3412 3414 3451 3516	compact, brown sandy silt, containing domestic rubbish - bones, charcoal and ash. " " " " grey ashy silt, with bones, charcoal and fired clay, ditch fill beside the lane.	spreads of compacted domestic rubbish, with fragmented bone and finds, underlying a building, and possibly levelled to form a construction surface for the building. s3516 is a ditch fill belonging to this levelling, but possibly deriving from the destruction of an underlying, unexcavated building. A50 B6

441	3497 3513 3518=3547	post hole, 0.2m dia, 0.04m deep. oval or U-formed drystone structure sunk in cut. fill between s3513 and cut, grey brown clayey silt with stone and bone.	this oven is 0.9m long, 0.6m wide, with unmortared walls 0.25m thick surviving to a height of 0.25m, built of stones <0.3m long. The structure was built in a cut which was then back-filled with s3518 -a deposit which was mixed with clay, possibly deliberately, and gave structural support to the drystone construction. Post hole s3497, in the thickness of the wall, may have provided support for a roof over the oven, whose existence is implied by the extent of the destruction deposits (see g443). A51 B6
442	3323 3441 3504 3506 3536	ash in the top of the oven. ash raked out from oven. ash raked out from oven. in situ ash in the oven. "	ash deposits relating to the use and cleaning of g441. A51 B6
443	3371 3445	loose stones and grey white redeposited ash. "	levelling of g441 for construction of the overlying building, A56. A50 B6
444	3440 3492 3496	black silt, charcoal, burnt daub. burnt daub, little black silt. brown sandy silt, burnt daub, stone and charred timber.	deposits relating to the destruction of the end wall of a building. The daub shows plank impressions, and the sill stones lie outwith a line of charred timber - a sill beam probably for the construction of the wall. A53 B6
445	3334	black and red charcoal and sandy silt, with charred, worked wood.	these burnt structural fragments are difficult to relate to anything else. Their position makes it equally possible that they form part of a collapsed roof, wall, or wall bench and it is unclear which is most likely. A52 B6
446	3325 3337	stake hole, 0.06m dia, 0.08m deep. burnt planks, the uppermost being oriented E - W, while the underlying was oriented NE - SW.	a similar difficulty in interpretation applies to this group as to g445, but the position of g446 next to a wall line, and the differing orientation of the two layers of planks, suggest that it may be part of a burnt floor and wall bench, with the stake hole s3325 marking the inside edge of the wall bench. A55 B6
447	3309 3315	grey sandy silt, much stone, ash. grey-brown silty sand, with much stone.	fill and levelling deposits containing domestic rubbish, accumulated, or, more likely, deliberately deposited prior to the construction of a new building. A54 B6
448	3303 3306	a diffuse spread of stones < 0.2m dia, oriented E - W. grey-brown mixed layer stones, laminated charcoal and ash.	deliberate levelling of a burnt structure, with sill stones from the underlying structure, and burnt timber, displaced from their original position. A54 B6

449	3330	stone packing, small, burnt stones <0.15m dia in a post hole ca 0.5m dia.	post hole and associated stone packing. A55 B6
	3333	cut containing fire-shattered stones, 0.5m dia, 0.15m deep.	
450	1596	charred basket work and rope, probably a basket.	fire layer, in situ and contemporary with g446 &c. Within the fire deposits lay a crushed organic artefact, heavily charred and thus preserved, which was probably a basket with a rope handle. A53 B6
	3310	black charcoal deposit, with large pieces of charcoal.	
	3314	white, clean, in situ ash.	
451	1893	thin layer of grey brown sandy silt, with charcoal.	this deposit appears to be a fill layer, possibly deliberate and forming part of the construction level for overlying house. A54 B6
	1899	homogeneous brown sandy silt, medium stones.	
452	3474	brown grey, slightly laminated sandy silt with fired clay, ash, bone and charcoal.	layer belonging to earlier phase, which should really not have been excavated, and does not relate to any of the structures we dug. A50 B6
453	3453	post hole?, sub-circular cut 0.3m dia, with unburnt wood fragments.	constructional details which possibly/probably belong to an earlier structure on this plot and not to those we dug. There is, however, a possibility that s3588 should be seen as a part of the building A61, but the stratigraphic relationship is far from clear. A63 B6
	3455	post hole, 0.35 x 0.45m, packed with ca. 25 stones 0.05-0.25m, post pipe 0.12m dia.	
	3459	post hole, oval 0.3 x 0.2m with preserved wood.	
	3500	post hole	
	3588	sill beam slot, 1.8 x 0.2m and 0.05m deep.	
454	3312	black-brown sooty silt, lying in the angle of two burnt beams s3355.	part of the construction (and destruction) of the earlier of the two burnt houses. A55 B6
	3355	burnt beams oriented NE - SW and SE - NW at right angles	
	3503	NE-SW oriented charred planks, from a plank floor.	
455 - 570 NORTHERN AREA			
571	1066	ditch, 3 x 0.3m, with fills of ashy, brown sandy silt.	the line of a wall - a cut for the construction of a wall or drainage by a wall. A56 B7
572	927	grey-brown sandy silt.	deposits covering the collapse of wall g390/397. A120 B8
	930	description lacking.	
573	1544	post hole, 0.16m dia, 0.14m deep.	three posts forming the corner of a building, contemporary with g571. A55 B6
	1545	post hole, 0.11m dia, 0.1m deep.	
	1546	post hole, 0.1m dia, 0.07m deep.	

574	3388	charcoal on red sandy silt.	a charred sill beam or, less probably, part of a collapsed roof. The position of this group in relation to the remainder of A49 suggests that it was a sill beam for a floor or wall bench. A49 B6
575 - 658 NORTHERN AREA			
659	3318	stake hole with preserved wood, 0.05m dia, 0.08m deep.	probably relating to an unexcavated structure, as it lies stratigraphically very low down in relation to the earliest building excavated on the plot. A63 B6
660	3321	stake hole, 0.05m dia, 0.1m deep.	two stake holes which probably derive from building A49. B6
	3322	stake hole, 0.05m dia, 0.08m deep.	
661	3324	stake hole, with unclear edge, 0.05m deep.	stake hole which, stratigraphically and structurally isolated, cannot be grouped to anything else, but is within the stratigraphic and topographic area of a building on the northern part of the southern plot. A55 B6
662	3326	stake hole, 0.08m dia , 0.1m deep.	group of four stake holes in a similar stratigraphic position and forming a diffuse line relating to the construction of A55, and probably contemporary with g661. See the description of A55 for further discussion. A55 B6
	3327	stake hole, 0.08m dia, 0.02m deep.	
	3328	stake hole, 0.08m dia, 0.04m deep.	
	3329	Stake hole, 0.06m dia, 0.05m deep.	
663	3331	stake hole, 0.05m dia, 0.07m deep.	stake hole which could not be grouped with anything else. It lay, however, in the topographical and stratigraphical area of a building on the northern part of the plot and was therefore grouped there. A49 B6
664	3340	stake hole, 0.1m dia, 0.1m deep.	a group of stake holes, with one post hole, which derive from a construction within building (A49). They form a diffuse line or group which is clearly related to the extent of the hearth (g432) in the corner of the building, and appear to have been a smoke hood or pot hook with an associated fire screen of some sort. A49 B6
	3341	stake hole, 0.08m dia, 0.03m deep.	
	3342	stake hole, 0.08m dia, 0.04m deep.	
	3343	stake hole, 0.08m dia, 0.03m deep.	
	3344	stake hole, 0.05m dia, 0.03m deep.	
	3345	Stake hole, 0.05m dia, 0.03m deep.	
	3347	stake hole, 0.05m dia, 0.03m deep.	
	3348	stake hole, 0.05m dia, 0.04m deep.	
	3352	post hole, 0.22 x 0.16m, 0.02m deep.	

665	3349	stake hole, 0.07m dia, 0.03m deep.	a group of stake holes/small post holes related to g664, and forming a later or earlier phase of the same structure in relation to the construction and use of hearth g432, or g438. A49 B6
	3350	stake hole, 0.05m dia, 0.13m deep.	
	3351	stake hole, 0.02m dia, 0.03m deep.	
	3353	stake hole.	
	3356	stake hole of irregular form, 0.1m dia, 0.1m deep.	
	3357	stake hole, rectangular 0.07 x 0.05m and 0.04m deep.	
666	3431	post hole, 0.15m dia , 0.04m deep.	small post hole and stake holes associated with the construction of a building (A63) earlier than those which we have excavated, as part, probably, of an internal cross wall. A63 B6
	3432	stake hole, 0.05m dia, 0.04m deep.	
	3434	stake hole, 0.06m dia, 0.08m deep.	
	3435	stake hole 0.06m dia, 0.04m deep.	
667	3461	small post hole	post hole in building A63. B6
668	3346	grey redeposited ash, with bone and stone.	layer relating to an earlier construction, A63, which was largely unexcavated. A63 B6
669	3498	stake hole, 0.05m dia, 0.05m deep.	two stake holes forming part of the construction of oven A51. B6
	3499	stake hole, 0.05m dia, 0.05m deep.	
670	3360	two burnt planks, each c. 0.4 x 0.4m.	oriented at right angles and lying in two layers. These probably derive from the collapse of a wall bench or wall over a wooden floor, though they are difficult to interpret given their isolation from similar deposits. Their destruction is represented by g445. A55 B6

GROUP DESCRIPTIONS FOR THE NORTHERN AREA

g-nr	S-nr	s-unit description	group interpretation
455	3583	small post hole	group of stake holes forming a diffuse right angle line from the western plot boundary into the workshop area. Associated with g577 (A79) and possibly also A89. The stratigraphic position of some of these is unclear; they cut through brown, mixed rubbish layers and were all picked up at different levels. A89 B5
	3584	bottom of stake hole.	
	3656	stake hole	
	3673	stake hole	
	3531	stake hole, 0.08m dia 0.04m deep.	
	3534	stake hole, 0.06m dia 0.04m deep.	
456	4144	yellow brown silty sand.	water deposited sand, flood deposits. A5 B1

457	4173	packing of stones <0.5m diameter, containing a Vendel period carved stone grave marker (s4053).	stone packing, probably the foundation to a quay or hard standing, covering an area ca 20 x 10m, along the shore line. A64 B1
	4174	packing of stones <0.5m on the northern half of the plot, but not extending into the area of the later lane.	
458	4119	grey brown sandy silt, with bones	rubbish layers, and water deposited sands, lying over the stone foundation g457, and containing a mixture of finds, including bone, some of which were water-eroded, and others not. A16 B1
	4111	laminated flood sands, and brown sandy silts containing domestic rubbish	
459	4116=4098	black sandy silt, largely below the present water table, deposited under standing water.	domestic rubbish layers, deposited under water, with a high organic content, particularly of charcoal. A16 B1
460	4113=4172	red brown sandy clay.	clay layer with iron pan and lenses of flood sand, but limited to the area of the stone packings, g457, and therefore probably redeposited. A16 B1
461	4112	clean yellow clay.	find-free clay layer, almost certainly redeposited, as it was not naturally laminated, and appeared to contain little or no organic material. A16 B1
462	4105=4107	grey brown clayey silt with much stone.	rubbish layer, or possibly a fill/levelling deposit, given the amount of stones. A13 B2
463	4093	brown clayey silt, with lumps of clay, and burnt daub.	layers of domestic rubbish deposited over and around the stones of g457. A13 B2
	4089=4090	brown black silts, with animal bone and charcoal.	
	4100	grey black sandy silt, with ash and charcoal	
	4079	ash and charcoal.	
464	4083=4085	dark brown clayey silt, with charcoal and flecks of clay	layers of domestic rubbish lying over the stones of the hard standing or quay, g457. A13 B2
	4092	grey black silty and sandy clay, with lenses of fragmentary wood, coprolites, and animal bone.	
465	4080	brown red silty sand and gravel - water sorted	flood deposit, with later iron pan concretions. A13 B2
466	4074	upper layer of stones over s4074.	stone filled pit, forming a post pad or refilled post hole in the southern wall of the first building on the northern part of the plot. A66 B3
	4073	packing of stones 0.1- 0.3m in size, in a shallow pit.	

467	4012=3987 =3994	brown clayey silt, with wood chips, animal bones, charcoal, fired clay.	domestic rubbish deposits within a building on the northern plot. A23 B3
468	4035 3919 4039 4041 4050 4056 4078	find-free, clean brown clay. grey clay, few finds, small amount of charcoal, ash and bone. dark brown clay, with charcoal. clean, yellow clay, find free, few stones. clean yellow clay, redeposited. stone packing for post s3982, consisting of five stones 0.1-0.3m, and one large, flat stone 0.5m dia on the western edge. mixed yellow and brown redeposited clay with charcoal and ash content.	redeposited clay layers laid out as levelling/sealing deposit over the surface of the northern plot, and functioning also as the foundation and floor of the first building on the plot. With this is associated at least one major load-bearing post, s4041/4056 whose clay fill and stone packing are contemporary with, and therefore a part of this group. A66 B3
469	4013 4014	grey black clay, against, around and under the stones of s4014. angular stones 0.1-0.4m.	sill stones set in clay, forming a part of the southern wall line of the first building on the northern part of the plot. A66 B2
470	3940 3985=3929 3933 3936 3984 4059 4009 3885	grey, sooty, charcoal rich sandy silt. sandy silt, black with charcoal and containing large amounts of fired daub charcoal, in the lower parts of the layer. charred wood lay oriented N – S deposit of charcoal, a little fine silt and burnt birch bark. black silt, fewer large charcoal pieces than s3985. charcoal and silty sand overlying a patchy clay deposit. charcoal and white ash, mixed and disturbed, with an overlying clay lens. very mixed deposit, with large amounts of burnt daub, charcoal and iron pan. Disturbed post-deposition.	a group of fire layers, more or less disturbed after deposition. s3933, s3985 and s3885 probably represent structural remains of a building, but the degree of disturbance makes it difficult to determine its details. A66 B2
471	3986 3927	17 burnt stones, ash, and charcoal in a small pit. grey brown ashy, sandy silt, c. 5 small stones.	the initial interpretation of this as a small hearth is possible, but given the site and size of the group, it is equally likely that this is a post hole, which contained a post which burnt, affecting the stone packing. A68 B3

472	4087=4082	very mixed rubbish deposits - ash, charcoal, bone, wood chips in clayey silt	domestic rubbish layers which built up to the east of g457 (s4095), i.e. the quay. A4 B2
		ash and charcoal	
	4115	brown black sandy silt with	
	4096	decayed wood, bone, charcoal and fired clay.	
473	3853	stake hole, 0.04m dia, 0.02m deep.	clay floor/foundation deposits, strongly affected by the build-up of domestic rubbish and containing charcoal, fired clay and ash deriving from the destruction of a building by fire. A68 B3
	3922	grey black silty clay with charcoal, burnt daub, bone.	
	3880	brown black clayey silt, charcoal, burnt daub, bone.	
	3876	grey black clayey silt, little bone, otherwise much like s3880, s3922.	
	3879	brown silty clay, little bone.	
	3938	grey clay, with varying amounts of charcoal and burnt daub.	
474	3970	burnt plank, 0.3 x 0.13m lying N – S	some of the structural details, of a building destroyed by fire (A66) on the northern part of the plot. A66 B3
	3968	stone-filled pit, 0.15m deep and 0.3m dia. - possibly a post hole	
	3982	post hole, 0.25m deep, 0.2m dia, filled with charcoal and silt.	
	4061	two charred planks, ca. 0.05 x 0.2m, one parallel to the northern lane, the other at right angles to it.	
	3997	shallow post hole, 0.2m dia, 0.14m deep.	
475	3907	yellow white ashy clay 0.3 - 0.4m thick, in an oval, shallow pit. There were at least three clear reconstructions, all recorded as one deposit. recorded as one deposit. No stones.	an oval hearth, constructed of clay in a shallow cut, and frequently renovated. The lack of fine laminations in the ash and charcoal deposits suggests rapid build up, and therefore intensive use of the feature. A68 B3
476	3906	grey, find free clay	a reconstruction of hearth g475. A69 B3
	3905	red brown burnt clay	
477	3904	grey, compact clay, few finds	a reconstruction of hearth g475/6, with two stake holes for an ancillary structure, perhaps a spit or pot chain. The stake holes may also relate to the earlier phases of the hearth i.e. g475-6. A69 B3
		red brown burnt clay	
	3901	stake hole, 0.05m dia 0.09m deep	
	3875	stake hole, 0.05m dia 0.11m deep	
	3874		
478	3850	black, slightly laminated charcoal and ash, few finds	ash and charcoal deposits with fragments of burnt clay and few finds, deriving from and associated with the use of the hearth g475 - g477. A69 B3
	3851	black sandy silt, few finds	
	3852	yellow white ash, few finds	

479	3859=3894	brown black, laminated clayey silt with bone, varying in character slightly from area to area.	rubbish deposits. The degree of lamination suggests a slow build-up of rubbish over time, which is supported by the variable nature of deposit - probably an occupation deposit i.e. relating to the daily use of a building. A69 B3
	3903	grey white ash.	
	4055	white sandy ash.	
480	3861	redeposited sandy ash, relatively clean of bone.	a series of highly laminated deposits of charcoal, ash, and clay which were deposited progressively in relation to the constant use and cleaning/clearing of an activity area. The finds from these deposits include substantial amounts of casting waste, as well as domestic rubbish. A69 B3
	3860	laminated red brown sandy silt and sand.	
	3856	laminated red brown sandy silt and sand.	
	3862	laminated black charcoal and soot deposit.	
	3798	brown sandy silt, with thin charcoal lenses.	
	3848	fine brown black silt.	
	3849	compact grey sandy clay.	
	3881	grey brown sandy silt.	
481	3811	mixed deposit of clay, charcoal, ash with limited amounts of copper alloy casting waste cut in/under s3811, with ambiguous stratigraphic relation to it, but containing sherds of a pot found in s3811.	dumps of household and industrial rubbish which may have accumulated during a (brief) period of abandonment of the northern building on the northern plot. A69 B3
	3819	dark brown silty sand, with bone, burnt clay, charcoal.	
	3823	yellow brown, fine silty sand, with fired clay and bone.	
	3834		
482	3818	ca 20 stones 0.05 - 0.25m large	stone packing - sill stones for the northern wall of the northern building. A75 B4
483	3815	light brown silty sand	construction level and floor for new building A75, relating to g482, consisting of the fragmentary remains of a levelling spread/casting floor of sand, and overlying clay deposit for flooring. A75 B4
	3814	compact blue grey clay with a little casting debris	
484	3790	Slightly laminated grey black clayey silt, with ash lenses	deposits relating to the use and occupation of building A75, limited to the area of the underlying clay and sand deposits (g483). s3795 may be a small warming hearth of the type found in other buildings on the site (e.g. A66), and believed to have been used for pre-warming moulds before casting. A75 B4
	3795	small depression filled with charcoal and soot	
	3796	laminated fine light brown sandy, very little bone	
	3813	brown silt, some charcoal and burnt clay	
485	3746	deposit of ash and stones, excavated as one s-unit but possibly more than one phase	a rectangular hearth, 0.5 x 0.9m large, edged with 0.2 x 0.05m stones set on edge, and with a depth of 0.2-0.3m. It was floored with smaller, heat shattered stones <0.1m dia, and filled with ash and sand. A81 B4
	3750	stake hole, 0.07m dia, 0.14m deep	

486	3778	laminated charcoal deposit, with slag and iron objects	use and occupation deposits over a floor layer of sandy clay, itself full of finds from the use of the area. These deposits are chronologically and physically associated with the use of hearth g487. A75 B4
	3782	grey black sandy clay with little bone	
	3783	grey silt, over sandy silt, with more bone than s3778	
487	3789	stake hole, 0.06m dia, 0.04m deep.	a hearth, immediately under hearths g485 and g488. The stones are larger than those in g485, and only a few of the edging stones survive. The triangular platform may related to a smoke hood over the hearth. The centre of the hearth is slightly sunken, and less intact than the rest of the structure, as a result of heat damage. A75 B4
	3792	ca. 50 stones < 0.3m dia, set out in a rectangle, with a triangular platform at one end.	
	3797	post hole, 0.2 x 0.15m, 0.15m deep.	

488	3319	stake hole, 0.05m dia, 0.05m deep.	a renovation of hearth g487, forming the second major phase of the hearth's construction. A76 B4
	3781	stone packing, of stones < 0.15m dia, set in compact red brown ash.	
489	3775	laminated charcoal and ashy silt.	charcoal and ash deposits relating to the use and cleaning of hearth g488. A76 B4
		grey white ashy silt.	
	3776	light brown silty ash.	
	3779	black charcoal, with a little	
	3780	burnt clay.	
490	3768	an extremely mixed fill in a small cut - clay, sand, ash and silt	cut and fill for a small pit. No clear evidence of function, though it is possible that it may be a post hole from which the post has been drawn up. A76 B4
491	3752	brown grey silty sand, fired clay, ash, charcoal and lumps of iron corrosion	rubbish deposit under hearth g485 - possibly used for levelling up the underlying surface for the construction of the hearth, as the slight lamination suggests that the deposit built up rapidly rather than progressively in relation to an activity. A81 B4
492	3754	black sandy silt, with much charcoal, organic material and slag	use and occupation deposits related to hearth g485. Slightly laminated, but not very much so, which suggests a relatively rapid accumulation. A81 B4
	3760	black brown sandy silt with fired clay, charcoal and ash, the whole subsided over underlying structures	
493	3739	blue grey redeposited clay over the edges of hearth g485	levelling and surfacing of hearth g485 in preparation for new construction in the area. A84 B4
494	3661	brown silt, with very framented animal bone.	redeposited clay laid as levelling and flooring for an overlying structure (A84). Contemporary with g493, but containing much more rubbish and charcoal from use as a working surface. A84 B4
	3557	black brown silty clay, varying in character over its surface, but always containing charcoal and casting waste.	
495	3643	brown silt, with much fragmented animal bone	rubbish layers, relating to the use of structure A84 (g494 &c). The degree of fragmentation of the finds in this deposit strongly suggests that it was heavily trafficked. A84 B4
496	3629	laminated sand layer, with ash, charcoal and fired clay.	ash and charcoal layers built up on the casting floor s3629 and deriving from its use over a period of time. A84 B4
		grey ash layer.	
	3640	compact, laminated ash and	
	3651	charcoal.	
		white ash layer.	
	3665		

g497	3636	brown clayey silt, with much bone	rubbish layers on the northern plot, and cut by a phase of the boundary ditch to the north-west. Large amounts of bone in all the deposits were fragmented, suggesting that the surface was walked on, while the amounts of unframented bone indicate a rapid accumulation of rubbish. A85 B5
	3639	dark brown, sandy silt with much bone and charcoal	
g498	3541	light brown ashy silt.	ash deposits, throw out onto the plot, outwith a contemporary building (A84). The lack of metal working finds suggests that these deposits were primarily domestic in origin, probably from cooking fires. A85 B5
	3590	grey white, clean ash.	
	3619	grey white ash, with little bone or stone.	
	3625	grey white ashy sand with a little bone.	
	3630	grey white ash, with a little burnt bone.	
g499	3593	stake hole, 0.04m dia, 0.04m deep.	a major, load bearing post in the short wall, or probably gable, of the northern building. A84 B4
	3603	cut and fill for a post hole, 0.6 x 0.8m in area, 0.4m deep.	
g500	3529	brown grey sandy silt, with casting waste, charcoal and bone.	rapidly accumulated deposits from casting and other metal-working activities immediately outside the northern building, on the open area of the plot. s3587 may be a small warming hearth, though not as well constructed and sophisticated as, for example, those inside the earlier building A66. g500 respects the boundary ditch on the north-western edge of the plot. A87 B5
	3551	black clayey silt, with much charcoal.	
	3571	red and white ash, mixed with sandy silt.	
	3580	grey charcoal and ash, mixed with silt and iron corrosion.	
	3587	a concentration of charcoal in a small, bowl shaped depression, 0.25m dia.	
	3611	black brown sandy silt with much charcoal.	
	3617	black clayey silt, with much charcoal.	
	3634	brown silt, with much bone, both large and intact, and small and fragmented.	
	3646	brown silt with much bone.	
g501	3561	mixed deposit with much casting waste, ash and charcoal.	rapidly accumulated rubbish deposits from metal working, discarded just outside the western gable of a building, which g501 respects. A87 B5
	3572	grey brown ash, silt and charcoal.	
g502	3537	ash, charcoal, metal waste.	rubbish deposits resulting from metal working, especially copper alloy casting. A87 B5
	3555	charcoal deposit.	
	3570	charcoal, with a little slag.	
	3586	grey white ash, charcoal and slag.	

503	3393	brown clayey silt, with much bone	rubbish layers covering the whole of the northern plot, including the north-western boundary ditch, which is filled by s3548. This may represent a period of abandonment, given the rapid accumulation of rubbish, and the difference between these deposits, which contain primarily domestic debris, and the underlying rubbish deposits (e.g. g502), which contain metal working debris. A87 B5
	3533	brown silt, with large, intact, animal bones	
	3548	grey brown silt and ash, with burnt bone	
504	3454	mixed brown - light brown sandy silt, with a few mould fragments	mixed deposits, with metal working rubbish, confined to the area of the western gable of a building, and representing the only surviving internal deposits from that building. s3454 is probably the scant remains of a floor, with the other contexts being activity deposits on that floor. A87 B5
	3495	black brown clayey silt with much charcoal	
	3501	red brown clayey silt, with ash, charcoal, clay and metal debris	
505	3457	stone filled post hole 0.6 x 0.5m in area, for post s3460.	the slight remains of the gable of a building (A87). s3489 was a post pad for the south-western corner post of the building, and was set into a clay foundation which may have extended as a floor into the building but survived only as fragments. In addition, s3457 & s3460, a major post hole in the gable line, and stake hole s3494, appear to be associated with this group both stratigraphically and topographically. A87 B5
	3460	post pipe for massive plank or cleft post, set at a slight angle eastwards.	
	3489	pad stone.	
	3491	grey black clay with charcoal and ash.	
	3494	stake hole, 0.1m dia, 0.06m deep.	
506	3424	brown grey sandy silt	debris from metal working, in the gable line of a building A91. s3442 is redeposited, as is s3446, but s3443 may not be. A91 B5
	3442	brown ashy silt	
	3443	brown grey silty sand, with burnt and unburnt flint, and slag	
	3446	black sandy charcoal	
507	3406	gravel and ash, taken as one layer, but very laminated and could be two	while this group may be redeposited burnt material, it is tempting, in view of the lamination of the deposits, to wonder whether it might in fact represent the remains of a very ephemeral hearth. A91 B5
	3413	laminated charcoal	
508	4000	grey black silty sand with domestic rubbish	the earliest deposits surviving in the area of the northern lane, respecting the quay foundation (g457) which lies to the south of the group. These deposits predate the first surfacing/construction of the northern lane. A16 B1
	4117	grey black silty sand with flecks of clay and much animal bone	

S09	4095	badly preserved wood, 3.5 x 0.2m, lying parallel to the eastern edge of stone packing g457	a sill beam or other wooden construction probably relating to a wooden superstructure over the stone packing g457, the whole forming a quay. There is a possibility that this may also have been the sill for, or rotten remains of, a fence line dividing the quay or hard standing from the town. A13 B2
S10	3740	light grey ash in hearth g485	these deposits derive from the use of hearth g485. They are only very slightly laminated, suggesting rapid accumulation and thus intensive use of the hearth. A81 B4
	3744	charcoal over and beside hearth g485	
	3748	light brown ash, no bone, little charcoal	
S11	3788	ca. 20 stones <0.25m dia, in a diffuse packing oriented NW - SE	sill stones, slightly disturbed on the upper surface, in a packing oriented NW - SE, probably contemporary with g469, possibly equal to g109, and forming the north and south long walls of building A68. B3
	4008	ca. 10 stones, <0.3m dia, in a packing oriented NW - SE	
S12	4001	black brown, laminated rubbish deposit with lenses of decayed wood	rubbish deposits, covering the area of the northern lane. s4046 blended into s4001, which totally surrounded it. The wood in s4001 may be the remains of a wooden paving of the lane. A18 B3
	4046	lens of yellow silty sand	
S13	3865	red brown silt, much casting debris - moulds, crucibles, metal scrap and corrosion products	debris from metal working - probably copper alloy casting. s3889 may be the redeposited remains of a casting floor. A73 B3
	3889	brown red silty sand, with small amounts of casting waste and little bone	
S14	4075	yellow grey redeposited clay, few finds	this redeposited clay layer represents a levelling and resurfacing of the northern plot in preparation for a new building, and function as construction level, and possibly also floor for that building. A19 B3
S15	4045	packing of ca. 10 stones <0.4m dia	this group consists of the slight remains of a northern wall or fence line between the plot and the northern lane. A66 B3
	4060	charred plank, 0.2 x 0.05m, parallel with the northern lane, oriented NW - SE	
	4088	redeposited yellow clay with little charcoal	
S16	4043	small layer of redeposited clay with ash	redeposited clay and sand layers in a very small fleck, which are probably contemporary with the construction of the workshop building A2. A2 B2
	4044	clean, light brown sand fleck	

S17	3974	stake hole, 0.05m dia, 0.1m deep	a line of five stake holes at intervals of ca. 0.2m with an associated decayed piece of wood, probably a withy from the wattle. All the holes incline northwards. This represents a fence line, or, more probably, a wattle panel in a gable wall. Despite the fact that s4118 was dug at a lower level, the position of the plank, and the relation of the stake holes to it, strongly implies that it belongs to this group. It is probable that s4118 marks the construction level, while the remainder of the group was excavated from their destruction level. A2 B2
	3975	stake hole, 0.04m dia, 0.12m deep	
	3976	stake hol, 0.03m dia, 0.11m deep	
	3977	stake hole, 0.05m dia, 0.1m deep	
	3978	stake hole, 0.04m dia, 0.1m deep	
	3979	stake hole, 0.05m dia, 0.1m deep	
	4118	fragment of preserved plank	
S18	3942	stake, 0.03m dia	this group consists of a line of six stake holes, all with decayed wood, some of which were too small to be dug. They are associated with a charred plank, fragments of decayed withies, and large amounts of burnt and unburnt daub. The whole is probably the remains of the corner of an internal and external wall in a building. A66 B3
	3943	stake, 0.04m dia, 0.12m deep	
		stake, 0.03m dia	
	3944	stake, 0.03m dia	
	3945	charred plank, 0.15 x 0.6m	
	3947	stake or small post hole, 0.09 x 0.06m, 0.19m deep	
	3971	stake 0.04m dia, 0.06m deep	
	3980	stake hole	
	4047		
S19	3599=3825	ca. 20 stones, 0.1 - 0.25m dia	a pit filled with stones. s3932 and s4004 belong to the same stratigraphic level, but there is a possibility that s3599 should be higher, though the balance of probability places it within this group. Given the position of the group, it is likely that this is the post hole for the western corner post of a house oriented NW - SE on the northern part of the plot. A73 B3
		ca. 20 stones, 0.1 - 0.3m dia, in a cut 0.7m dia, 0.2m deep	
	3932	brown grey sandy silt, and shattered stones	
	4004		
S20	4070	brown black clayey silt, with areas of ash and charcoal, and some bone	rubbish deposits, probably laid down in wet conditions, though perhaps not under water. This group respects the northern wall line of the first workshop. A71 B2
	4081	mixed clayey silt, with areas of ash and charcoal	
	4099	small, white, ash layer	
S21	4024	brown black sandy silt, with a high organic content	flood layers, with laminations of decayed plant material, The lack of water erosion on the bones in these deposits suggest that they result from a relatively short period of flooding, perhaps a spring flood. A71 B2
	4068	grey white water sorted sand, with lenses of decayed organic material	
	4076	thin deposit of organic material	

S22	3931=3953 4007 4018	brown grey clayey silt, laminated with organic material black brown sandy silt, slightly laminated with sand, and with charcoal on the surface black sandy silt, with charcoal and bone	this group contains rubbish, particularly domestic rubbish, deposited on the shore line, and subjected to flooding. s4007 was probably laid down underwater, as indicated by the concentrations of charcoal on the surface of the deposit, while s3931 shows evidence of only intermittent flooding. A71 B2
S23	3930 3939 3949 3954	grey yellow ash, containing articulated bone, fired clay and much rubbish brown black sandy silt, much charcoal, fired clay, bone &c yellow grey ash layer, with charcoal, fired clay, charcoal, calcite and bone loose packing of stones on plot boundary	a group of rubbish layers laid down on the shore line, containing primarily domestic rubbish, including the articulated paw bones of a fox, i.e. evidence of fur working. All these deposits are confined to the area of the plot boundary, which they mark, probably having built up agains and around a fence lline, whose sill stones include s3954, which is thus grouped here. A72 B3
S24	4011 4015 4026 4031 4040 4051	grey black silt, very mixed with ash, charcoal &c grey silt, mixed rubbish grey silty sand, charcoal brown sandy silt, high organic content, bone black clayey silt, charcoal black silt, charcoal, ash	dry rubbish layers laid down within the area of the plot, and containing domestic rubbish. A wasp bead and a 'red eight' bead suggest a late eighth century date for the group. A23 B3
S25	3910 3981 3996	brown black silt, much charcoal and wood flecks yellow brown ash and sand layer, few finds yellow white ash, with a few stones < 0.1m dia	cleared charcoal and ash, possibly from hearth g471. A23 B3
S26	3973 3983	yellow clay, redeposited brown sandy silt, with fired clay, ash, charcoal	g526 is probably the slight remains of a structure. s3983 was suspiciously square in shape, and a square depression lay beneath it. This may have something to do with metal working, but the remains were so slight that it is impossible to interpret them with any certainty. A73 B3
S27	3946 3988 4032	brown silt, organic material bone, ash, fired clay, charcoal, on shore line dark brown clayey silt, decayed wood chips, little bone black silty clay, charcoal, traces of organic material and bone	this group of deposits form an extensive layer of primarily domestic rubbish, with noticeable amounts of organic material, probably wood chips. The layers may have been intermittently flooded, judging from the formation of superficial lenses of organic material, particularly charcoal. A70 B3

528	3941	grey black clayey silt, much charcoal, some oriented E - W	the slight lamination of all these s-unit suggests a progressive accumulation, possibly on a work surface. The amount of bone and other rubbish suggests an area which was not in constant use, and thus frequently cleaned, which is supported by the lack of the characteristic fine laminations of charcoal and ash found in most of the 'occupation' layers within buildings. A73 B3
	3955	grey sandy silt, with bone, ash, charcoal and clay	
	3967	mixed grey sandy silt, slightly laminated with ash, charcoal, clay flecks	
529	3966	black charcoal, few finds	g529 consists of very clean fire deposits which respect the line of fence or wall line g517. g529 may be redeposited, but this is not initially clear. A23 B3
	3969	white, redeposited ash	
	3972	charcoal deposit, few finds, respecting g517	
530	3956	yellow redeposited sand, some bone	the probable remains of a casting floor in the workshop, possibly clearance from such a floor, cut by the 1994 excavations. A23 B3
	3965	spot of fine, clean, brown silt	
531	3989	white ash, with charcoal.	clearings from a hearth in the workshop. There is a slight possibility that g531 contains burnt remains of a structure, probably hearth. A23 B3
	3990	white ash, with charcoal.	
	4025	laminated ash and charcoal with decayed organic content.	
532	3926	grey - grey brown silty clay, with charcoal.	g532 may be the remains of a clay floor in the workshop. s3991 varies, being more clayey in some areas than others. A72 B3
	3991	black grey sandy - clayey silt.	
533	3935	brown black silt, much charcoal and birch bark.	rubbish and activity deposits, probably outside a building, and contemporary with rubbish deposits g527. A70 B3
	3963	clayey silt, with sand and bone.	
534	3912	black clayey silt, with much charcoal.	layers resulting from the use of hearth g537 in the workshop. A73 B3
	3914	small charcoal and ash layer.	
	3918=3642	brown black clayey silt, charcoal and metal corrosion.	
535	3878	grey sandy silt, with clay, ash, charcoal.	g535 consisted of slightly laminated layers containing abundant evidence for metal working, in the form of charcoal, scrap and ash. It was stratigraphically associated with the use of hearth g537. A73 B3
	3886	grey sandy silt, with clay.	
	3911	grey clayey silt, with charcoal, and iron corrosion.	
	3925	laminated lenses of grey ash, red brown sandy silt, charcoal.	
536	3902	dark brown clayey silt, much charcoal, organic material, casting debris.	rubbish layers laid down on the shore line, over both flooded and dry deposits. Probably deposited under relatively dry conditions. A70 B3
	3909=3913	dark brown grey clayey silt, much charcoal, organic material, casting debris.	

537	3917	yellow white sand and silt laminated with hard burnt clay.	g537, in the workshop, is almost certainly a hearth, 0.7 x 1.5m in size and oval in form. No stone survives in the structure but the sand, which lies in the lower part of the deposit, may be the remains of extremely hard-burnt stone. A73 B3
538	3884	lenses of ash, charcoal and red burnt clay	this deposit is related to the use of hearth g537, and it indicates a renovation or repair to the structure of the hearth. A74 B3
539	3882	black charcoal layer	associated with and probably cleared from the renovation of hearth g537 which is represented by g538. A74 B3
540	3842	laminated grey sandy silt, charcoal, clay and casting waste	deposits accumulated around hearth g538 in the course of copper alloy casting. A74 B3
	3845	grey brown sandy silt with casting waste, bone, ash and charcoal	
	3920	white, redeposited ash	
541	3883	black brown sandy silt, spots of clay, bone and other rubbish, high organic content	layers of domestic and industrial rubbish progressively accumulated in the beach area under damp, but not flooded, conditions (high organic content, but the bone was not water eroded). A74 B3
	3887	black sandy silt, with spots of unfired sandy clay for moulds	
	3888=3900=3915	grey black clayey silt, slightly laminated, with high organic content less bone than s3883	
542	3868	yellow brown ash, with charcoal and calcite.	redeposited wood ash outside a building. A74 B3
	3908	light brown ash, with charcoal and calcite.	
543	3805	brown grey sandy silt, much articulated bone, west of the plot boundary.	rubbish layers built up on the shore line, and in the northern plot. The plot boundary is visible in the shifting character of the deposits, which contain more bone outside the plot, more casting waste (and fragmented material) inside the plot. A78 B4
	3838	yellow white ash.	
	3843=3817	grey brown clayey silt, decayed wood chips, much casting waste.	
	3864	laminated red burnt silty sand, sandy clay and charcoal.	

S44	3863	stone, flat topped, ca. 0.3m dia	stone, pad for post on the western boundary of plot, associated with fence line of wattle. Probably contemporary with pad stone and stakes, g577. A79 B4
S45	3773	brown sandy silt, some metal corrosion, and organic content, particularly coprolites	layers of primarily domestic rubbish, deposited outside and west of the buildings on the plot, and extending over the plot boundary onto the shoreline. There is evidence for fur working, and the amounts of coprolites suggest the presence of domestic animals. A78 B4
	3812	brown black sandy silt, much bone, particularly fur and bird bones, and wood chips	
	3820	grey black sandy silt, with high organic content, particularly coprolites	
S46	3839	grey sandy silt, much ash and charcoal, with clay, burnt clay, wood chips and other rubbish	domestic rubbish, mostly ash and charcoal, redeposited in the space between the two buildings on the plot. A74 B3
	3841	black sandy silt, largely charcoal, little ash	
S47	3828	very mixed grey layer, with charcoal, ash, clay, sand, and wood chips, relating to the use of s3837.	a deposit relating apparently to metal working, highly laminated and covering the damaged remains of what is probably a small casting bowl, i.e. sand filled construction which moulds, or as a place to set a mould and hold it steady while the metal is poured in. A74 B3
	3837	fine yellow white sand in a small clay-lined depression	
S48	3824	an irregular row of ca. 30 stones <0.3m dia, oriented NW - SE	sill stones, mortared with clay, and the decayed remains of the wooden wall which stood over them. Probably contemporary with sill stones g616. Forming the south wall of building A75. B4
	3826	yellow clay covering s3824 and mixing into a clayey silt layer containing much decayed wood	
S49	3803	grey brown sandy silt, somewhat laminated, much ash and charcoal, and bone	Layers of domestic and industrial debris, lying outside a building. Contemporary with sill stones g548, but earlier than the destruction of that building. A78 B4
	3822	laminated grey black clayey silt, with casting waste, bone and charcoal	
S50	3801	light grey clayey silt with ash, clay flecks &c	rubbish deposits, mostly domestic, post-dating g548, but lying outside the area of the building represented by g548. s3801 lies in the area of the southern wall line of the northern building. These are probably layers which built up between the two long walls of the parallel buildings, in a narrow gap. A78 B4
	3802	concentration of stones in grey ash	
	3804	grey sandy silt, with spots of clay, ash, charcoal &c	
	3809	grey sandy silt, mixed with ash	
	3810	laminated ash, charcoal, sand and bone, grey brown sandy silt.	

551	3836 3855	fine brown silt packing of ca 15 stones, <0.2m dia	a stone packing in a shallow cut, filled with silt. It is possible that this should be grouped with stone packing g519, but more likely that they represent different phases. The position of this group suggests that it forms part of the sill stones for the gable of a building. A19 B3
552	3755 3763 3767	black sandy silt, a mix of charcoal and ash charcoal layer black brown clayey silt much charcoal, coprolites and fibres of decayed wood	clearance from hearth g553, and deposits deriving from activity around the hearth. A78 B4
553	3761 3766	red brown sandy silt, with burnt and shattered stones, coarse sand and burnt bone stake hole, 0.06m dia, 0.14m deep	first construction, badly heat damaged, of a large hearth, which continues as g554, g556, and g565. Very little survives of the structure of g553, which appears to have been rectangular in form, and possibly edged with upright stones, of which two are still in position on the western edge. The size of the hearth is unclear; 1.4 x 0.5m survives, but the eastern edge is cut away by Stolpe's excavations. A78 B4
554	3757 3758 3759	stake hole, 0.04m dia, 0.04m deep. stake hole, 0.03m dia, 0.04m deep. red brown sandy silt, with burnt and shattered stones. Four stones survived from a probable edging on the western side, but the area of burning extended beyond these on the western and structure. It was cut on the eastern edge, by by a later pit, g561 (s3725).	a reconstruction or renovation of g553. The new hearth was larger, though equally damaged by intense heat. It is unclear whether it originally had a floor of smaller stones, but the amount of sand in the deposit suggested that it might have had. Two stake holes indicate the presence of ancillary structures, and the relative lack of domestic finds, such as bone and ceramics, tends to suggest that this hearth may have had an industrial function. A78 B4
555	3753 3756	charcoal, with burnt and shattered stone. slightly laminated charcoal layer.	charcoal layers deriving from the use of hearth g554. A78 B4

556	3700	stake hole, 0.06 x 0.07m, 0.155m deep	A sub- rectangular hearth, 1 x 1.5m, with evidence the northern end of the structure. The western and southern edges were marked by eight stones <0.2m dia., forming a frame for the clay base. Three large stones <0.4m dia. lay 0.5m west of the main structure. The eastern edge was cut away by Stolpe, and by a later pit, g561 (s3725). g556 is less damaged by heat than the earlier hearths lying under it. It is also smaller. The clay layer which forms the base of the structure is burnt only at the northern end. A row of five stake holes south of the hearth indicates associated structures, perhaps a wattle surround or screen. A80 B4
	3710	stake hole, 0.04m dia 0.13m deep	
	3711	stake hole, 0.03m dia, 0.05m deep	
	3712	stake hole, 0.05m dia, 0.07m deep	
	3713	stake hole, 0.03m dia, 0.03m deep	
	3747	red brown sandy silt, mixed with clayey silt/ burnt clay.	
557	3721	black sandy silt, much charcoal, some ash.	clearance from hearth g556. A80 B4
	3749	red brown sandy silt, burnt stone, ash, charcoal.	
	3751	lens of charcoal.	
558	3714=3707	black brown sandy silt, much charcoal and ash.	layers deriving from the use of hearth g565. A82 B4
559	3704	grey sandy silt, with ash	the slight lamination of these layers indicates an accumulation over time - suggesting they result from use of the area rather than single events of rubbish disposal. They form the topmost fills in pit g561. A83 B4
	3705	grey brown silt, very mixed, with ash, charcoal and bone	
560	3738	brown black silt, filling a post pipe for a post 0.11m dia, 0.12m deep	post hole, construction and destruction could not be stratigraphically separated. A80 B4
	3765	clay and ash fill in cut for s3738	
561	3550	stake hole, 0.06m dia 0.08m deep.	part of a small pit, with one straight edge, cut through hearths g565 &c. and filled with redeposited material from the hearths. There is no evidence of burning in the pit itself. In the fill of the pit, along its western edge, two stake holes suggest that the cut may have been related to a structural renovation. A83 B4
	3677	stake hole, 0.07m dia 0.15m deep.	
	3725	cut, ca 0.2m deep, itself cut by Stolpe's excavation filled with mixed ash, filled with mixed ash, charcoal, burnt and unburnt clay, and unburnt stone.	
		stake hole, 0.04m dia, 0.04m deep.	
	3726		
562	3672	black charcoal and ash, with some bone	use and clearance layers around and relating to hearth g554. A82 B4
	3681	white grey ash.	
	3689	black sandy silt, with charcoal, ash, bone, no stone.	

563	3535 3573	black sandy silt, areas of ash, pieces of charred wood, and fibres of decayed wood. black sandy silt, with much charcoal.	it is difficult to decide whether g563 is a part of a fire layer or merely rubbish and clearance from hearths. Given the amount of wood in s3535, and the relationship of the group to g568, which is undoubtedly a work floor, it seems likely that g563 is a disturbed area relating to the levelling of g568. A83 B4
564	3502 3505	thick deposit of grey ash. grey ash, with an overlying brown silt lamination.	clearings from a hearth, within the southern building. A83 B4
565	3708	laminated yellow and red brown sandy silt, bounded on the western edge by three stones <0.3m dia. Contains some burnt and shattered stone at the bottom of the feature.	This group is a late phase of the hearth g554 &c in the southern building. Whether it is the latest phase is unclear; the stratigraphic relationship between g554 and g565 was ambiguous as the area had been affected by intense heat. A82 B4
566	3690 3741 3745	black brown charcoal. black brown charcoal. black sandy silt, with coprolites, moulds, wood chips.	clearance and activity around and relating to hearth g554, or possibly the later hearth g556. A78 B4
567	3722	very fine, grey sand, with ash, charcoal, burnt and unburnt clay. Laminated. Relatively clean of finds. No bone.	This laminated deposit of sand in the southern building is similar in character and texture to the sand used to temper the fabric of moulds for casting. It is laminated from regular cleaning, supported by the lack of finds, and is probably the remains of a casting floor, or a store of sand. A80 B4
568	3581 3678 3680 3683 3688 3691 3693 3698 3718 3719	charcoal layer yellow white ash, with charcoal charcoal with flecks of ash charcoal laminated with thin lenses of ash white grey ash, laminated with charcoal black, laminated sandy silt, much charcoal, coprolites, flecks of clay white ash, containing a charred stake laminated ash and charcoal brown silt, much charcoal yellow brown ash, with charcoal	g568 consists of those deposits which appear to derive from the use of hearth g565. The layers are laminated, but also contain amounts of small but unpleasant rubbish, particularly coprolites. This suggests that the maintenance of this area related less to the quality of rubbish removal than to its quantity. It seems more likely that this area had an industrial function than that it was a part of a house. A82 B4
569	3552 3676	black brown sandy silt, with bone, ash and charcoal grey, mixed sandy silt, with areas of ash and charcoal	this group contains s-units relating to a disturbance in g568, which may possibly have been caused by a post hole relating to an over-lying structure. A83 B4

570	3696	post hole for driven post with square cut point, 0.23 x 0.16m in area and 0.15m deep	two posts, which by their position seem to relate to hearth g565. They probably derive from structures associated with the hearth. A80 B4
	3702	hole for driven small post or large stake 0.1m dia, and 0.19m deep	
571-5	SOUTHERN AREA		
576	3663	heterogeneous black silt, much charcoal and many mould fragments	very mixed rubbish layers containing large amounts of debris from metal working. The group was distorted after deposition by the compression of deposits over a large underlying rock. A86 B4
	3668	mixed yellow red deposit of fired clay, sand, clay, charcoal and ash	
	3682	white ash, containing casting waste and gravel	
577	3213	bottom of stake hole, 0.04m dia, 0.01m deep.	a stone functioning as a post support at the corner of a building, or plot. The worn surface suggests that it may originally have been a saddle quern. Associated with this are two stake holes, and the bottom of another which has been partially dug away by an overlying drainage ditch. A79 B4
	3694	stake hole, 0.03 x 0.04m, 0.05m deep	
	3695	stake hole, 0.03m dia, 0.05m deep	
	3827	stone, ca 0.4 x 0.2m in area, with one very worn surface	
578	3596	brown white ash, with fired clay and charcoal	g578 is a series of rubbish layers deriving from metal working. It was grouped seperately from g576 because of s3675, which may be the cleared remains of another casting floor, and serves as a convenient chronological marker for breaking up the deposits. Both groups derive from the same type of industrial production, however, and may have accumulated over a very short period of time. A86 B4
	3659	grey white ash with fired clay, calcite and charcoal	
	3670	black silt, much charcoal and casting waste	
	3675	fine light brown sand, similar to mould temper	
579	3633	brown grey clayey silt, with charcoal	this group relates to the use of the south-western corner of the plot. A wattle fence marks the boundary of the yard, and part of it is preserved in s3638, which, however, post-dates the construction of the fence, which is defined by g577 or g544. A86 B4
	3635	red white ash layer	
	3638	brown grey sandy - clayey silt, containing the remains of a wattle fence line.	
580	3609	brown clayey silt, with industrial debris, bone and the remains of a wattle fence.	g580 contains the latest surviving level of the fence line noted in g579, and probably dates to just prior to its destruction. A86 B6
	3628	brown orange clayey silt with fired clay, ash, charcoal, and casting waste.	
581	3594	yellow white redeposited ash	fills in a small, NW - SE oriented ditch which drains into the NE - SW oriented boundary ditch g693 &c. A89 B5
	3597	mixed clay, ash, charcoal with intact bones, and a large piece of loom weight	
	3607	white grey redeposited ash	

S82	3539	compact grey sandy silt, with domestic and metal working rubbish, and organic material, particularly coprolites	rubbish layers deposited outside the building on this plot, and with similar contents to the many other rubbish layers in this area. These respect the western boundary of the plot. A88 B5
	3604	black and orange mixed ash, clay, charcoal and clayey silt	
S83	3549	brown silt, mostly charred and decayed wood fragments	the remains of a layer of wood chips, which have been affected by fire. A88 B5
	3592=3556 =3553	thin, slightly laminated charcoal layer	
S84	3509=3528	charred planks, lying on black silt and charcoal	given the relatively find free and apparently undisturbed nature of these layers, this is probably the remains of a fire layer, possibly containing structural details from a building. A89 B5
	3532	clean white ash	
	3554	light yellow ash, with crushed, burnt bone	
S85	3613	small fleck of light brown, redeposited ash	these three small layers lie one on top of each other in the area of the gable line in the northern part of the plot. They may be the remains of a post hole, from which the post was burnt out. A85 B5
	3657	mixed ash, charcoal, silty sand	
	3658	very hard, light brown ash, apparently undisturbed	
S86	3618	brown sandy silt, with burnt daub, in a shallow cut	very small layers, mostly cut away by Stolpe's excavation to the east, apparently a fire layer with burnt daub from the gable of a building. A85 B5
	3723	black brown silty sand, with burnt daub and charcoal	
S87	3650	grey brown sandy silt, with clay, slag, casting waste, coprolites and bone .	spreads of rubbish dumping on the plot, pre-dating the gable line in this area, and respecting the southern wall line of building A82. A82 B4
	3800	dark brown silt, much bone and a few piece of mould and crucibles.	
	3866	grey brown sandy silt, some bone.	
S88	3600	a fleck of redeposited clay, tempered with fine sand, like the fabric of moulds.	the composition of this group is reminiscent of g101 &c, the casting floor excavated in the eastern area. This may also be a floor for metal working. A84 B4
	3624	yellow brown silty sand with spots of clay.	
S89	3582	black grey charcoal, mixed with silt.	rubbish deposits, stratigraphically tied to the use of casting floor g588, and the associated building. A84 B4
	3605	brown grey sandy silt, with lumps of rust and amorphous iron objects.	

S90	3530	small stone-filled post hole.	the western wall of a building on the northern part of the plot. This may be a gable wall. s3622 and s3616 are on the same stratigraphic level, but s3743 is lower. It is likely that the cut for s3743, however, gives the construction level for the group, while the others were dug from the destruction level. A85 B5
	3608	stake hole, 0.045m dia 0.045m deep.	
	3616	shallow, ash filled cut which is probably a post hole.	
	3622	little ash filled area, probably a post hole, or the site of a post ash fleck, under s3622.	
	3655	ash filled hole, angled eastwards, probably a post hole.	
	3743		
S91	3701	black silty sand with areas of clay	the fragmentary remains of a clay floor, inseperable from its occupation layers, inside the northern building. A84 B4
	3716	brown black flecks of clayey silt, with charcoal	
S92	3644	brown grey silty sand, with iron corrosion, fired clay and charcoal	a levelling deposit, or remains of a casting floor (most likely both) which has subsided and broken up over underlying stone packings in the area of the gable line. A84 B4
	3649	light brown silty sand	
	3703	brown sandy silt.	
S93	3627	brown silty sand, clay, fired clay, charcoal and iron corrosion	rubbish deposits, from metal working, which are associated with the occupation of the northern building. A84 B4
	3684	dark brown silty sand, with charcoal, clay, fired clay	
S94	3595	three flat-topped stones ca 0.3 x 0.15m large, in a row.	s3674 and s3602 are fills in a shallow ditch parallel with the north-western wall of the northern building, which drains north-eastwards into the northern lane. s3595 crosses the ditch at its highest point and is probably related to a bridge or crossing of the ditch, serving an entrance in the end wall of the northern building. A85 B5
	3602	brown clayey silt, with charcoal.	
	3674	brown black silty sand with fired clay, charcoal.	
S95	2768	grey white ash, with burnt and shattered stone.	this seems to be a small structural stone packing in the western corner of the northern building. A97 B5
	2814	concentration of burnt stone under s2768.	
S96	2973	loose packing of stones 0.1-0.2m dia in brown silt, with clay, fired clay, ash, calcite and charcoal	this may be a structural stone packing, as g595, but, from the composition of the soil matrix, may equally well be a small domestic rubbish layer. The chances of its being a stone packing are increased by the presence of an apparent pad stone s3284 immediately adjacent. A97 B5
	3284	stone	
S97	3858	dark brown clayey silt with fired clay, ash, charcoal, organic material and little bone	rubbish deposits, under the second jetty foundation (g144), and immediately over flood layers. Contains primarily domestic rubbish, with very little, intrusive, evidence for metal working. A107 B1
	3928	brown clayey silt with fired clay, ash and charcoal	

598	3857	laminated ash and charcoal with oriented wood fibres surviving in the lowest layer of charcoal	burnt material lying over the stones of the first jetty foundation (g600). This deposit appeared to be in situ, and possibly contained remains of a wooden superstructure to the jetty. A107 B1
599	3847=3833	dark brown clayey silt with charcoal and bone, lying between the stones of the jetty foundation	deposits of primarily domestic rubbish post-dating the construction of the first jetty (g600), and subsided around its foundation stones. A107 B1
	3921	brown clayey silt, with charcoal and bone	
600	2326	large stones of first jetty foundation	the foundation for the earliest jetty on the site, consisting of a packing of relatively small stones, s3840 & s4064, within a frame of massive stones s2326, shaped like a 'T' with the broad end along the water front and the stem extending upslope towards the settlement. See fig. xxx for the details of this structure. A107 B1
	3840	packing of relatively small stones < 0.4m dia, over and relating to the large stones of the first jetty foundation.	
	4064	similar packing to s3840, but lying to the west of the end of the later jetty foundation gxxx, which it pre-dates.	
601	3830	black silt, with much charcoal, and iron corrosion, burnt stone	rubbish layers over the area of the jetty. It is difficult to determine whether they relate to the first or second jetty construction, but the presence of metal working debris in s3830 suggests a later date rather than an earlier. A108 B2
	3835	brown silt, with a high organic content, particularly coprolites.	
602	3821	brown silt, with much bone and burnt stone, some charcoal and fired clay	extremely loose, slumped and subsided rubbish deposits, in the area of the jetty/southern lane. All these deposits contained large amounts of bone, but were so disturbed as to have a high risk of contamination. A108 B2
	3846	brown clayey silt, very loose, with bone.	
	3873	brown clayey silt, very loose, with bone.	

503	3764	light brown silt, with ash and bone	rubbish layers over the area of the jetty, in the southern lane. As with all the rubbish layers in this area, subsidence caused contamination of the finds from these deposits. A109 B4
	3777	dark brown silt, with bone	
	3784	brown silt, with immensely high proportion of coprolites redeposited white ash	
	3785	brown silt, with fired clay,	
	3786	charcoal and bone	
504	3666	brown sandy silt, with large bones and burnt stone. Isolated between the foundation stones of the jetty.	a group of isolated small layers of varying types of rubbish, mostly domestic in character, lying over and between the foundation stones of the jetty, and probably associated with the use of the second jetty g144. A109 B4
	3671	brown sandy silt with bone, fired clay and charcoal white redeposited ash area isolated between jetty stones	
	3686	dark brown sandy silt, with bone and burnt stone.	
	3687	brown silt layer with flecks of ash and charcoal.	
	3771	brown sandy silt, with ash and bone	
	3772		
505	3692	brown silt with charcoal and bone	rubbish deposits in the southern lane, between the two plots. A109 B4
	3706	brown silty sandy, much bone	
	3762	brown sandy silt, with bone and little stone	
506	3409	brown silt, with ash, charcoal and shattered stone	rubbish layers lying over and around the foundation stones of the two jetties, but probably post-dating the use of both. A109 B4
	3430	brown silt, with organic material, bone and shattered stone	
	3437	yellow brown sandy silt, almost entirely coprolites	
	3438=3427	grey black sandy silt, with much charcoal	
	3447=3621	brown silt, with ash, charcoal, fired clay, and clay	
	3449	white patch of ash, with charcoal brown silt, with charcoal and little bone	
	3450		
507	3623	charcoal, with a little bone	rubbish deposits in the southern lane. A109 B4
	3626	grey black silt, with much charcoal	
	3631	brown silt, with ash, charcoal, fired clay and bone.	
508	3961	ca. 15 stones, 0.1 - 0.4m large, in a packing oriented NW - SE	sill stones for the southern long wall of the northernmost building on the northern plot. A68 B3

609	3791	decayed remains of 7 planks, SW - NE, on the surface of the northern lane.	a wooden paving for the northern lane, possibly of planking, but equally possibly, made of split logs. This paving may relate to the presence of stake and small post holes cutting natural, in the area of the northern lane, and observed under Stolpe's excavations (g351). A77 B4
610	3769	brown silt, with charcoal, ash, fired clay, and much crushed bone.	rubbish deposits in the northern lane, with the upper of the two, s3769, showing evidence, in the fragmentation of animal bone, of exposure to heavy traffic. A77 B4
	3816	dark brown silt, with organic content, charcoal and much bone.	
	3823	dark brown silty sand with bone, clay, fired clay, charcoal and organic content.	
611	3715	hard, yellow brown ash, with fired clay and charcoal	deposits of metal working debris. The lamination of this group suggests gradual accumulation, which would occur on a working surface, rather than an area of rubbish dumping. A81 B4
	3720	slightly laminated clay, with ash and charcoal areas	
	3727	laminated ash, clay, iron rich silt, charcoal	
612	3717	brown silt, containing charcoal, and much bone.	rubbish dumping in the northern lane. A77 B4
613	3601	9 stones <0.15m dia, on the edge of the northern lane	sill stones, slightly displaced in areas, in the northern wall line of the northern house. A75 B4
	3679	ca. 20 stones 0.05 - 0.3m in an irregular line, oriented NW - SE	
614	3320	post pipe for s3685, 0.3m dia, 0.55m deep.	three post holes, the upper edges of which may have been cut away by wear or clearance of the overlying deposits. s3685 was dug from its destruction level, which was higher up than s3737, s3736, but probably belongs to this group, based on its proximity to the other posts. With the stake holes, this group forms a renovation of the southern wall line of a building on the northern part of the plot. The size of s3685 suggests that it was a load-bearing post, and the stake holes seem to suggest wattle panelling in the remainder of the wall. A76 B4
	3391	stake hole, 0.05m dia, 0.11m deep.	
	3415	stake hole, 0.1m dia, 0.2m deep.	
	3417	stake hole, 0.03m dia, 0.02m deep.	
	3685	post hole, filled with ca 50 stones < 0.2m.	
	3736	base of a post hole, filled with light grey clay, 0.2m dia, 0.16m deep.	
	3737	base of a post hole, with three stones on the north-western edge, filled with ash, 0.17m dia. 0.13m deep.	
615	3660	stone packing for post hole s3574, consisting of ca 20 stone 0.1 - 0.4m large, several set on edge in a fill of sandy silt with a few bones.	the construction level of the gable line in this phase is established by these cuts and fills for major load-bearing posts. The destruction level is g900. A85 B5
	3685	stone packing for post hole s3606 (g900). ca 50 stones 0.1 - 0.4m large, in black brown clayey silt	

616	3831 3832	ca 10 small stones, 0.1m dia laminated ash layer, lying over and around s3831	this loose collection of stones set in ash might possibly have been a hearth, and this interpretation was suggested during excavation. However, given its position, it is more likely to be a post hole which was exposed to fire, particularly as the stones themselves showed no sign of intense heat. A75 B4
617	4048 4054 4094	light grey clayey silt, with charcoal, organic material and bone black sandy silt, with clay, charcoal, fired clay, organic material and bone. black sandy silt, with fired clay, charcoal and much stone	rubbish layers deposited on the shore line of the northern plot, possibly under damp conditions, as the layers seem to have flowed away from the northern building and spread over the lower part of the plot. A71 B2
618	4049	red, iron rich sand in a shallow cut, 0.2 x 0.18m in area, 0.15m deep.	a post hole in the construction of a quay or hard standing on the western edge of the later plot. A64 B1
619	3426	compact, brown, clayey silt, probably decayed wood, with bone and charcoal.	probably derives from a layer of wood chips, mixed with domestic rubbish, within the northern building. A91 B5
620	3473 3475	laminated black, red and white ash and charcoal, containing slag and crucible fragments. grey silty sand, with ash and charcoal.	rubbish deposits from metal working, also containing domestic rubbish, within the northern building. A91 B5
621	3458 3462 3495	black charcoal and ash layer, with a little silt. black brown sandy silt with much charcoal. black brown clayey silt with much charcoal.	charcoal deposits possibly deriving from a fire, or maybe clearance from a hearth, within the northern building. A91 B5
622	3612	brown clayey silt, with much charcoal and bone.	rubbish deposits in the northern lane, possibly relating to clearance and levelling of the plot following the fire represented by g621. A87 B5
623	3236 3365 3381 3448 3456	clean, orange yellow redeposited ash white grey redeposited ash, much burnt stone. light grey brown ash, redeposited. brown white, silty redeposited ash, with charcoal and bone. grey white redeposited ash, with charcoal and bone.	a large spread of redeposited ash, lying up against the line of a wall at its eastern edge. Probably, given its apparent relationship to an end wall of a building, this ash has been deliberately spread over the yard to level, resurface and seal the underlying rubbish layers. A91 B5

624	3384	charcoal lens.	a series of small ash and charcoal layers confined to the area of a wall line, and probably deriving from the burning of that wall. This group may be contemporary with g621. A91 B5
	3398	lens of light brown ash.	
	3402	charcoal lens over s3408.	
	3408	small, light brown ash layer, laminated with charcoal.	
	3411	laminated small area of charcoal, with ash.	
625	3217	brown silt, with ash and charcoal.	spreads of domestic rubbish outside a building, on the yard of the northern plot. A91 B5
	3262	brown silt, with fired clay, ash, charcoal and shattered stone.	
	3265=3264	brown silt, with fired clay, ash and charcoal .	
	3377	brown silty clay, with charcoal.	
	3386	light brown clayey silt, with organic material, ash and charcoal.	
	3425	compact, brown clayey silt, with animal bone.	
626	3235	black sandy silt, with much charcoal and areas of ash.	deposits of charcoal, laminated with ash in some areas, and mostly in situ. A91 B5
	3260	black charcoal layer, redeposited.	
	3428	small layer of charcoal.	
627	3807	orange ash, redeposited.	two areas of identical orange ash, deposited on the same surface. A88 B5
	3808	redeposited orange ash	
628	3614	black grey silty sand, with metal working debris, and fragmented bone	spreads of rubbish which mark the western fence line on the plot boundary. A88 B5
	3806	brown grey clayey silt, with charcoal, fired clay and organic material	
629	3664	brown sandy silt, with charcoal, little bone	although this layer was interpreted as a rubbish deposit during excavation, the lack of both bone and stone suggests that it may instead be a natural soil horizon, built up under vegetation. A92 B5
630	3436	black brown clayey silt, with metal corrosion and casting waste.	large spreads of rubbish over the open area of the northern plot, primarily deriving from metal working, apparently of both iron and copper alloy and containing large amounts of casting waste, scrap and mould and crucible fragments. A92 B5
	3470	brown silt, with clay, fired clay, charcoal and spots of metal corrosion.	
	3472	laminated black clayey silt with fired clay and charcoal.	
	3511	black clayey silt, with fired clay, ash, charcoal, disturbed.	
	3512	dark brown clayey silt, with spots of ash and metal working debris.	
	3515	black clayey silt, with much charcoal, metal corrosion and ash.	

631	3514	yellow grey ash containing moderate amounts of burnt and shattered stone.	possibly the remains of hearth, in situ, or the debris from the renovation of a hearth. A92 B5
632	3207	brown sandy silt with charcoal and iron corrosion	domestic and metal working rubbish deposits over the whole of the open area of the northern plot. A92 B5
	3228	brown grey sandy silt, with casting waste and bone	
	3231	black, sandy silt with organic material, clay, fired clay, ash, charcoal and bone	
633	3227	brown sandy silt, with much burnt and shattered stone, and intact bone.	fill of drainage ditch. A89 B5
634	3238	brown sandy silt, with burnt and shattered stone, clay, fired clay, charcoal and bone, particularly fish and bird.	accumulation of domestic rubbish against (directly south of) fence line s3081 &c (g842). The bird and fish bone might determine the season of this deposit. The stones probably come from a hearth clearance, or were used as pot boilers. A93 B5
	3242	black brown sandy silt, with much charcoal and fish bone, some fired clay.	
	3243	diffuse packing of burnt and shattered stone <0.2m, in light brown silty sand, with bone, particularly fish, ash, charcoal, fired clay	
635	3117	grey sandy ash, with fired clay, charcoal	fills in the boundary and drainage ditch. See also g633 &c. A92 B5
	3185=3197=3219	light grey silty sand, with ash, charcoal and varying amounts of stone.	
	3218	brown grey rubbishy silt.	
	3226	loose, redeposited ash and burnt stone.	
636	2941	light grey redeposited ash.	spreads of ash, probably redeposited, with charcoal and stone. These respect the northern edge of the plot. A95 B5
	2974	laminated grey, white, red ash and charcoal.	
	3036	white grey, redeposited ash.	
	3059	light grey, laminated ash with charcoal.	
637	2846	grey brown silt, a large, thin, laminated deposit with slag, and other metal working debris	working surface, roughly cleaned, with debris from metalworking, and in one area, smithing slag, from iron or copper alloy. A95 B5
	2863	lens of brown black silt, mostly soot and charcoal, with slag	

638	2796	white ash deposit, possibly in situ, with fired clay, calcite and charcoal	These extensive spreads of redeposited ash are largely clean of finds. The lack of lamination confirms that they were deposted rapidly, and thus probably deliberately, as a resurfacing of the plot. A97 B5
	2817	large layer of compact, white grey ash	
	2831	compact, yellow white, redeposited ash	
	2845	clean, grey white, redeposited ash	
	2847	clean, yellow white, redeposited ash	
	2851	compact, white, redeposited ash	
	2879	grey white redeposited ash, with burnt stone	
	2894	grey white redeposited ash	
639	2816	charcoal layer	charcoal on the surface of g638. A97 B5
640	2811	red ash, with charcoal and some burnt stone	g640 is another extensive spread of redeposited ash. The slight lamination of this group may indicate a longer period of accumulation, to have functioned as a resurfacing in the northern plot. A97 B5
	2813	slightly laminated, white ash, probably redeposited	
641	2625	light brown silt, with organic material, particularly dung, and bone.	this group covers the whole surface of the northern plot, and seems incompatible with the presence of a building on the plot. There are only very small amounts of metal working waste in this group, probably residual. A98 B6
	2629=2656=2752	brown silt, much burnt and shattered stone, burnt and unburnt crushed bone.	
	2755	grey black silt, with much charcoal and ash.	
	2769	brown silt, relatively large amounts of bone.	
642	2618	yellow white redeposited ash.	areas of redeposited ash, thrown out into southern part of the plot. A99 B6
	2726	grey white redeposited ash.	
643	2594	red yellow redeposited ash	redeposited ash in the open area west of the plot. A101 B6
	2595	white redeposited ash	
644	2606	lens of brown sandy silt	redeposited charcoal and ash, respecting the otherwise barely visible walls of a small building on the southern part of the plot. A99 B6
	2609	compact, white yellow ash, slightly laminated with charcoal.	
	2630	charcoal, slightly laminated with ash.	
645	2607	lens of white yellow ash.	in situ fire deposit within the southern building on the plot. A99 B6
	2608	charcoal layer.	
646	2605	stake hole base, 0.04 x 0.03m, 0.03m deep.	a group of stake holes on the surface of the northern plot during its otherwise abandonment gxxx &c. It seems likely that these relate to the 'ghost' of a small building (g644 &c) on the site of the previous workshop. A99 B6
	2610	base of a stake hole, 0.08m dia, 0.03m deep.	
	2620	stake hole, 0.06m dia, 0.13m deep.	

647	2626=2583	light brown sandy silt, with wood chips, charcoal.	these layers cannot really be described as rubbish layers, as the amount and size of finds, particularly bone and fired clay, is relatively small. It is possible that they are the remains of a fill layer of wood chips, much decayed. A100 B6
648	2585=2593	clean, yellow white ash, with most of the bone in this layer coming from the underlying deposits.	clean, redeposited ash layers, resurfacing the plot. A100 B6
	2588	lens of white yellow ash.	
	2615	yellow white sandy ash, with a little gravel, burnt stone and charcoal.	
649	2476	brown, variable layer of sand, silt, gravel, with clay, fired clay, ash, charcoal and organic dung and coprolites.	extensive spreads of domestic rubbish including large amounts of bone and dung. The lamination of these layers is slight, suggesting a rapid accumulation, and they may result from a period when the northern plot was empty (see also g641). A101 B6
	2484	black brown sandy silt with much charcoal	
	2557	part of s2476, but more silty. dark brown silt, similar to s2476, but with less organic content	
	2565	brown sandy silt, with ash and charcoal	
	2612		
650	2473	isolated areas of yellow white ash over g649	these flecks of wood ash over the surface of g649 may have come from the first reoccupation of the northern plot. A101 B6
	2474	"	
	2513=2546	"	
	2527	"	
651	2393	post hole, 0.15m dia, 0.08m deep.	post and stake holes forming a slightly curved line at right angles to g906. A100 B6
	2490	irregular post hole, possibly double, 0.43 x 0.34m and 0.24m deep.	
	2493	base of post hole, 0.24 x 0.18m, 0.07m deep.	
	2589	stake hole, 0.05m deep.	
	2788	stake hole, 0.03m dia, 0.08m deep.	
	2790	post hole, 0.14m dia, 0.22m deep.	
	3034	stake hole, 0.06m dia, 0.06m deep.	
652	2463	very mixed, slightly laminated sand, silt, clay gravel, all types of household rubbish.	rubbish deposits around a small building on the plot (g644 &c). This surface appears to have lain open over some time, judging from the lamination of the deposits, the amount of fragmentation in the bones on the surface, and the accumulation of coprolites. A101 B6

653	1772	grey white redeposited ash.	domestic rubbish deposits in the yard on the northern plot. A101 B6
	2506=2528	black grey silt, much charcoal, and domestic rubbish.	
	2547	lens of charcoal.	
654	2411	stake hole	this group forms a line of stakes oriented NW - SE, in the middle of the plot. It forms the slight remains of a wattle wall in the southern building. A104 B7
	2412	"	
	2413	"	
	2414	"	
	2415	"	
655	2453	light grey ash layer.	a series of small ash and charcoal layers cleared from a hearth in the southern building. A104 B7
	2458	light grey ash, containing loose stones.	
	2460	charcoal layer, few finds.	
656	2436	stake hole, 0.05m dia, 0.08m deep.	this is a group of stake holes forming a curving row oriented NE-SW within the workshop building. Its function is unclear, though it may have formed a fire screen. s2584 was grouped here on the basis of its location, but it is possible that it was actually a single post hole from an earlier date. A104 B7
	2437	stake hole, 0.05m dia, 0.05m deep.	
	2438	stake hole, 0.05m dia 0.05m deep.	
	2447	stake hole 0.05m dia, 0.02m deep.	
	2448	stake hole 0.05m dia 0.07m deep.	
	2449	stake hole 0.05m dia 0.08m deep.	
	2584	small post hole, 0.12m dia, 0.19m deep, leaning to the west.	
657	2420	small post hole, 0.12m dia, 0.15m deep	stake holes deriving from internal furnishings in the southern building. A104 B7
	2432	stake hole, <0.05m dia 0.05m deep	
	2433	stake hole >0.05m dia 0.07m deep	
	2434	stake hole dia 0,05 m 0,09m deep	

658	2732	possible stake hole 0.06 x 0.04m, 0.015m deep.	a scatter of stakes and one post hole in the northern building on the northern plot. The post hole is clearly large enough that it probably contained a load bearing roof post, but the function of the stake holes, which belong to the same structure, is unclear. A97 B5
	2733	stake hole, 0.07 x 0.05m, 0.08m deep.	
	2734	stake hole, 0.08m dia, 0.07m deep.	
	2735	stake hole 0.05 x 0.04m, 0.04m deep.	
	2736	stake hole 0.05m dia0.03m deep.	
	2737	stake hole 0.04 x 0.06m,0.02m deep, uncertain .	
	2738	stake hole 0.05m dia 0.07m deep.	
	2754	base of post hole with stone wedge, 0.22m dia.	
	2767	stake hole, 0.05 x 0.04m, 0.05m deep.	
659 - 673	SOUTHERN AREA		
674	3050	stake hole, 0.05m dia, 0.11m deep.	a small, closely placed group of stake holes inside the southern half of the workshop. Presumably they derive from internal furnishings in the building. A92 B5
	3200	stake hole/small post hole, 0.06 x 0.11m, 0.12m deep.	
	3368	stake hole, 0.06 x 0.05m, 0.05m deep.	
	3369	stake hole, 0.05 x 0.04m, 0.055m deep.	

675	3382	stake hole, 0.1 x 0.09m, 0.09m deep.	stake holes deriving from internal furnishings in the southern building. A92 B5
	3383	small post hole, 0.12 x 0.08m, 0.1m deep.	
	3385	stake hole, 0.04 x 0.05m, 0.065m.	
676	EMPTY		
677	3519	stake hole	nine tiny stake holes, not excavated because they were only ca. 0.01m dia, spaced 0.03-0.1m apart. A wattle fence or wall line. A91 B5
	3520	"	
	3521	"	
	3522	"	
	3523	"	
	3524	"	
	3525	"	
	3526	"	
	3527	"	
678	2760	stone 0.4 x 0.4m	two flat topped stones, sunken into the underlying layers (not cut into) - almost certainly door jamb pads in a centre gable door. A97 B5
	2761	stone 0.5 x 0.4m	
679	2613	stake hole, 0.09m dia, 0.08m deep.	stake holes in the gable wall line of a building on the northern part of the plot. See also g906. A100 B6
	2614	stake hole, 0.09 x 0.12m, 0.18m deep.	
	2616	stake hole,0.11 x 0.07m, 0.09m deep.	
	2617	bottom of stake hole, 0.04m dia, 0.06m deep.	
	2622	stake hole, 0.04m dia, 0.05m deep.	
	2623	ash filled stake hole, 0.1 x 0.07m, 0.04m deep.	
	2786	stake hole, 0.07m dia, 0.04m deep.	
680	2638	brown sandy silt, with charcoal	deposits containing domestic rubbish and greater or lesser amounts of debris from underlying fire layers. A100 B6
	2700	brown sandy silt, less charcoal	
681	3119	yellow brown ashy sand.	ash layers in the western. A94 B5
	3123	thin black lens of charcoal.	
	3136	grey white redeposited ash, with a diffuse stone packing.	
	3144	orange white ash.	
	3152	thin lens of soot or powdered charcoal.	
	3169	mixed red brown redeposited sandy ash.	
682	3156	yellow white ash	redeposited ash and charcoal layers, in confined area relating to and post-dating fence or wall line g903. Probably occupation layers. A93 B5
	3174	thin charcoal lens	
	3177	grey white ash	
	3258	white, redeposited ash	

683	2908	stake hole, ca. 0.02m dia	a group of tiny stake holes under s2846 (g637) forming diffuse lines on the northern plot outwith the house, and north and east of the boundary ditch sequence. Given their position over g686 it is possible that these are the holes for stakes pinning a wooden paving for the path, whose foundation is g686. A90 B5
	2909	"	
	2910	"	
	2911	"	
	2912	"	
	2913	"	
	2914	"	
	2915	"	
	2916	"	
	2917	"	
	2918	"	
	2919	"	
	2920	"	
	2922	"	
	2923	"	
	2924	"	
	2925	"	
	2926	"	
	2927	"	
	2928	"	
	2929	"	
	2930	"	
	2931	"	
	2954	stake hole, 0.09m dia, 0.1m deep.	
684	3082	black charcoal deposit, little bone, burnt and shattered stone	layers resulting from the use and clearance of a hearth, possibly g685. These deposits respect the line of the southern wall in the northern building. A95 B5
	3086	white ash, with fired clay, charcoal, few bones, and burnt and shattered stone	
	3088	black, slightly laminated charcoal	
	3089	clean white ash	
685	3092	stone packing in s3024 ca. 20 stones, <0.2m loosely spread over an area 0.5 x 1m	a diffuse spread of stones, in the southern wall of the northern building, apparently exposed to fire. A90 B5
686	2955	clean white ash, redeposited	undisturbed white ash possibly laid out as foundation for a path to the door in the gable of a house, to which it leads. This surface is apparently not trampled, and may therefore have been the foundation for a paving. A90 B5
	2957	clean yellow white ash	
	3016	grey brown silt, relatively find free, not laminated	
688	2978	stake hole 0.02m dia	an irregular row of tiny stake holes in the northern yard, too small to dig, but visible because they cut an ash layer, g686. A90 B5
	2979	"	
	2980	"	
	2981	"	
	2982	"	
	3001	"	

689	2864	grey brown silty clay with much redeposited ash, charcoal and clay flecks.	domestic rubbish deposits on the surface of a yard to the west of the buildings on the northern plot. A95 B5
	2867	grey white redeposited ash.	
	3051	brown sandy silt, with fired clay, charcoal and much bone.	
690	2934	grey white redeposited ash, with clay, fired clay and charcoal little, black, slightly laminated,	redeposited ash and charcoal used as surfacing in area of yard, and between buildings A95 B5
	2937	redeposited charcoal layer small black, laminated charcoal deposit	
	2956	white redeposited ash, with much stone 0.05 - 0.2m	
	2997	dia, and little bone red grey redeposited ash with fired clay and charcoal	
	3021	grey redeposited ash, little bone	
	3049		
691	2983	stake hole, 0.02m dia	group of tiny stake holes contemporary with g688 and possibly relating to it. A90 B5
	2984	"	
	2985	"	
692	2933	redeposited ash with sandy silt and bone	fills in boundary/drainage ditch, contemporary with the redeposited ash layer g690. A95 B5
	2935	dark brown silt with clay flecks redeposited ash with sandy silt	
	2938	and bone. brown grey silt, with ash and	
	2939	charcoal, very mixed. grey redeposited ash.	
	2940	mixed grey redeposited ash,	
	2945	with large bones. brown sandy silt with	
	3193	clay, rotten organic matter and stone	
693	2893	shallow, flat bottomed cut.	late ditch cut at the western corner of the north-western boundary line. A96 B5
694	2821	white grey redeposited ash, with finds unaffected by heat. light grey clayey silt	fill and levelling for a floor. It is possible that s2821 might be a levelled hearth, but unlikely, given
	2824	sharply demarcated to W against a plank .	that few of the finds from this deposit are burnt. A96 B5

695	2573	loose stone packing, 0.3 x 0.15m, stones <0.1m.	stake holes deriving from the construction represented by floor layers g694. The post hole, s2596, and the stake hole s2599 were stratigraphically ambiguous, and may have been later, but were very close to the two other stake holes. They made more sense at this level than later, and have been grouped here on the balance of probability. A96 B5
	2596	post hole under and in s2573.	
	2599	stake hole, 0.07m dia, 0.14m deep.	
	2759	stake hole, 0.05m dia, 0.1m deep.	
	2762	post hole, 0.3 x 0.2m, 0.13m deep.	
	2822	stake hole, 0.1m dia 0.07m deep.	
	2823	stake hole 0.1m dia, 0.07m deep.	
	2825	stake hole, 0.04m dia, 0.1m deep.	
696	2773	stake hole, 0.04m dia 0.15m deep, decayed wood.	stake holes from the construction represented by floor layers g694 - apparently forming a fence or internal wall line oriented N - S. A96 B5
	2774	stake hole, 0.03m dia 0.1m deep, decayed wood.	
	3114	stake hole, 0.05m dia, 0.05m deep.	
	3154	stake hole, 0.05m dia 0.07m deep.	
	3155	stave hole, 0.13 x 0.06m, 0.05m deep.	
	3198	stake hole, 0.05m dia, 0.03m deep.	
	3199	stake hole, 0.05m dia 0.1m deep.	
	3215	stake hole, 0.04m dia 0.08m deep.	
	3220	stake hole, 0.05m dia, 0.05m deep.	

697	2772=3179	mixed colours of silt with organic content, fired clay, ash, charcoal, overdug.	deposits accumulated over floors g694, during metalworking - probably primarily copper alloy casting. A96 B5
	2812	laminated charcoal layer with ash, fired clay, and clay.	
	2815	black brown silt, with fired clay, charcoal and ash.	
	2818	grey brown clayey silt with iron corrosion, and relatively large amounts of bone.	
	2820	black clayey silt, with fired clay and charcoal.	
	3151	dark brown silt, with little bone and stone.	
698	2781	laminated grey white ash, with fired clay and charcoal.	ash deposits, by their lamination probably gradually built up during daily work and cleaning in the southern building. A96 B5
	2810	grey white ash, with fired clay and charcoal.	
699	2756	grey redeposited ash with a few pieces of burnt bone.	ash deposits within the southern building. A96 B5
	2779	charcoal layer with clay, fired clay and ash.	
	2795	grey redeposited ash with a few pieces of burnt bone.	
	3035	grey, slightly laminated ash, with fired clay, calcite and charcoal.	
700	2808	post hole, 0.2m dia 0.1m deep, uncertain no plan, measurement only a point.	stake and post hole in the north-western wall of the southern building. A96 B5
	2809	stake hole.	
701	2728	red brown silt, with iron pan, charcoal, fired clay, clay, calcite and ash.	the latest in situ rubbish deposits with substantial evidence of metalworking. A96 B5
702	2744	stake hole 0.04 x 0.03m, 0.03m deep	a diffuse spread of stake holes in the western part of the northern yard or building. Their function is unclear, but they may derive from the southern wall of the northern building. A97 B5
	2745	stake hole 0.05m dia, 0.07m deep	
	2746	stake hole 0.04m dia, 0.1m deep	
	2747	stake hole 0.04 x 0.05m, 0.03m deep	
	2748	stake hole 0.06 x 0.04m, 0.06m deep	
	2749	stake/post hole 0.1m dia, 0.13m deep	
	2750	stake hole (double with s2751) 0.08 x 0.07m, 0.08m deep	
	2751	stake hole 0.09m dia, 0.1m deep	
	2765	stake hole, 0.05 - 0.1m dia, 0.28m deep	

703	2739	stake/post hole 0.13 x 0.1m, 0.35m deep, uncertain	a diffuse spread of stake holes in the western part of the northern building or yard. Their function is unclear. A97 B5
	2740	stake hole 0.04m dia, 0.04m deep	
	2741	stake hole 0.05m dia, 0.04m deep	
	2742	stake hole, 0.04m dia, 0.01m deep, uncertain	
	2743	stake hole 0.06 x 0.04m, 0.07m deep	
704	2766	stake hole, 0.05m dia, 0.1m deep.	a group of stake holes and one post hole forming structural elements in the northern half of gable line g678 &c. A97 B5
	2784	stake hole, 0.08m dia, 0.08m deep.	
	2785?	stake hole, 0.08 x 0.09m, 0.11m deep.	
	2787	post hole, with stone wedge, 0.32 x 0.37m, 0.24m deep.	
	2797	stake hole 0.065m dia, 0.085m deep.	
	2799	stake hole 0.05 x 0.04m, 0.07m deep.	
	2800	stake hole, 0.07 x 0.06m, 0.11m deep.	
	2801	stake hole 0.07 x 0.06m, 0.03m deep.	
705	2778	white brown sandy silt with charcoal, ash, fired clay and calcite.	a mixed rubbish deposit primarily of cleared material from a hearth. A98 B6

706	2775	white redeposited ash, with calcite and charcoal	redeposited ash, very clean, and probably used for levelling. A97 B5
	2855	clean, yellow white redeposited ash	
	2861	yellow white redeposited ash, with charcoal	
707	2958	dark brown silt, with burnt and shattered stone ash and charcoal	this deposit lies in the vicinity of several groups of redeposited hearth clearance layers, i.e. g684, g686 and g690, but it is unclear whether it belongs to any of them, as the soil content is much greater. A95 B5
708	3024	extensive and relatively clean layer of redeposited charcoal, with some fish and bird bone in areas and defined on the southern edge by shattered stone.	levelling deposit of charcoal, redeposited over the northern half of the plot, creating a surfaced yard. It is probable that charcoal was deliberately used, for reasons of hygiene. A90 B5
709	3094	stake hole, 0.06m dia 0.08m deep	stake holes in a fence line, spaced c. 0.3m apart forming an irregular fence line oriented N-S across the northern part of the plot. A90 B5
	3095	stake hole 0.06m dia 0.06m deep	
	3096	stake hole 0.07m dia 0.08m deep	
	3097	stake hole 0.05m dia, 0.08m deep	
	3098	stake hole 0.07m dia, 0.1m deep	
	3099	stake hole 0.08m dia, 0.08m deep	
		stake hole 0.06m dia, 0.1m deep	
	3100	stake hole 0.08m dia, 0.15m deep	
	3101	stake hole 0.08m dia, 0.17m deep	
	3102	stake hole 0.06m dia, 0.18m deep	
	3103	stake hole 0.05m dia 0.07m deep	
	3104	stake hole 0.03m dia 0.12m deep	
	3105	stake hole 0.06m dia, 0.14m deep	
	3172?		

710	3171	stake hole 0.05m dia, 0.09m deep	a diffuse group of stake holes on the north-western edge of the northern yard (over g708). A90 B5
	3245	stake hole 0.04m dia, 0.03m deep	
	3246	charred stake 0.02 x 0.05m, 0.07m deep	
	3247	stake hole, 0.07m dia, 0.08m deep	
	3248	stake hole, 0.05m dia, 0.03m deep	
	3251	stake hole, 0.03m dia, 0.02m deep	
	3252	stake hole 0.05m dia, 0.09m deep	
711	3018	white redeposited ash, with charcoal	redeposited ash layers lying under g708, but over a series of stake holes and constructional details. These deposits respect the western gable line of a building largely cut away by Stolpe's excavations to the east. A90 B5
	3187	grey white redeposited ash, with charcoal	
	3230	light grey redeposited ash, with charcoal and some sandy silt	
	3267	charcoal, with burnt stone, and fired clay	
712	3229	orange grey sandy silt mostly ash, with some charcoal	redeposited ash on the northern yard. A91 B5
713	3212	white grey redeposited ash, with charcoal	redeposited ash spread on the northern edge of the northern yard. A91 B5
714	3204	rubbish filled stone packing over s3279.	these two areas of stone packing lie in the central area of the northern plot, and are probably sill stones for the southern wall of a building on the northern part of the plot and largely destroyed by Stolpe's excavations. A90 B5
	3277	two stones.	
	3279	stone packing.	
715	2795	grey ash, with some burnt bone	ash deposits, probably clearance from an industrial hearth, within the southern building, on the southern half of the plot. A96 B5
	3035	laminated grey ash layer with fired clay, calcite and charcoal	
716	2892	brown clayey silt, with much bone, little charcoal and fired clay.	rubbish deposits extending from the plot onto the open area to the west. A96 B5
	3068	brown clayey silt, with much bone and stone, and clay, fired clay and charcoal	
717	3244	charcoal, with fired clay, ash and clay	structural elements (s3244 - sill beam and s3275, sill stones) for a building in the northern corner of the site. A93 B5
	3275	stone packing in charcoal deposit, with fired clay.	
	3297	charcoal, with fired clay, under and around s3275	

718	3237	black grey sandy silt, with organic content, clay, fired clay, ash, calcite, charcoal and casting debris.	rubbish deposits in the area of the 1990 the 1990 trench, containing abundant evidence for metal working. These deposits are among the latest evidences of copper alloy casting on the plot. A88 B5
	3272	black brown sandy silt with clay, fired clay, ash calcite and charcoal, and casting waste	
	3647	black silt, with iron oxide, slag, iron, copper alloy, clay, fired clay, mould fragments	
719	3273	small area of slightly laminated white grey ash, possibly within a building grey black sandy silt with much charcoal, some fired clay	occupation deposits within the area of a building (g903 &c.) which lies largely outwith the north-western side of the trench. There is no evidence for metal working here. A93 B5
	3287		
720	3079=3076	dark grey sandy silt with ash and charcoal	spreads of charcoal rich rubbish, with so much spreads of charcoal rich rubbish, with so much nearly be defined as charcoal layers. The position of the deposits suggests that they are the remains of a structural element, possibly a wall line or fence line, parallel with the northern lane. A90 B5
	3083	grey black sandy silt with ash and charcoal	
	3112	grey sandy silt with ash and charcoal	
721	2989	grey sandy silt, with much ash, charcoal and stone	pair of stake holes, probably contemporary with g688 and g691. s2989, by its form and position, seems likely to have been a part of the structure of the northern long wall of a building parallel with the northern lane. A90 B5
	3044	three stones forming a packing 0.15m dia around a filling 0.05m dia, 0.05m deep, possibly a stake hole	
	3048	stake hole, 0.05m dia, 0.05m deep	
722	3249	stake hole, 0.06m dia 0.06m deep	structural elements over g623, in the northern building. A91 B5
	3250	post hole, 0.12m dia 0.05m deep	
723	3269	charcoal lens	charcoal and ash rich layers, lying on the surface of the yard, outwith the building, and probably deriving from the use of a hearth inside said building. A92 B5
	3270	brown sandy silt, with lenses of charcoal	
	3285	brown black sandy silt with clay, ash and charcoal	
	3298	irregular deposit of white ash, with burnt stone	
724	3288	laminated black sandy silt with much charcoal and some ash & clay	redeposited charcoal and ash, on the yard of the plot, resulting from gradual deposition over a period of time. This group respects the southern wall of the northern building. A88 B5
725	3278	pad stone on one side of an entrance. This stone is the same as s2761.	This stone was, by chance, measured twice. g725, however, represents the construction level, while g678 represents the destruction level. g725, however, is probably a repair to the structure represented by g726. A90 B5

726	3281	topmost fill in a post hole under g725, red brown silt.	two fills, possibly the same, with the upper affected by iron pan accumulated around g725, in a post hole for a driven post. By its size, the post was load bearing, and its position suggests that it was a door jamb. A 91 B5
	3283	brown black silt, with a 0.07m dia stone, in a post hole 0.15 x 0.18m tapering to 0.08m dia at the bottom	
727	3121	light grey ash, laminated and containing charcoal and orange ash	these ash deposits, which appear to have built up gradually, from their degree of lamination, mark the extent of a building. s3276 is limited by a wall line, as is s3121. A90 B5
	3214	red brown silt, apparently ash, with charcoal	
	3276	small layer of grey white ash	
728	2986	stake hole, 0.04m dia	all these stake holes are 0.05 - 0.1m deep. They are probably contemporary with g683 and lie in the south fence of the northern yard. A90 B5
	2987	stake hole, 0.04m dia	
	2988	stake hole, 0.04m dia	
729	2946	stake hole 0.09m dia and 0.1m deep	two stake holes associated with the north-western boundary ditch. Possibly related to g904. A93 B5
	3132	stake hole, 0.06 x 0.07m, 0.05m deep	
730	3221	stake hole, 0.02m dia 0.05m deep	stake holes, forming a diffuse group in the same area, which during excavation were interpreted as belonging to the same structure, though it is unclear what that structure might be. Stratigraphic analysis suggests that they derive from the short, western wall of a northern building largely cut away by Stolpe. A90 B5
	3222	stake hole, 0.02m dia 0.05m deep	
	3223	stake hole, 0.02m dia, 0.05m deep	
	3224	stake hole, 0.02m dia, 0.05m deep	
	3225	stake hole, 0.02m dia, 0.05m deep	
731	3182	stake hole, 0.04m dia, 0.05m deep.	a diffuse group of three stake holes in the area of the southern fence of the northern yard. A90 B5
	3183	stake hole, 0.03m dia, 0.05m deep.	
	3184	stake hole, 0.1m dia, 0.15m dcep.	
732	3115	three stones <0.15 dia limited to the east by a line of wood fragments	sill stones at the southern edge of the northern yard. The line of wood fragments probably derives from the associated sill beam. A90 B5

733	3233	post hole, ca 0.2 x 0.2 m, depth uncertain.	sill stones and other structural elements in the gable line of a building largely cut away to the east by Stolpe's excavations, but clearly contemporary with the charcoal resurfacing of the northern yard, g708. A90 B5
	3234	stake hole, 0.04m dia.	
	3263	five shattered stones < 0.2m dia, in a diffuse line.	
	3266	stake hole, 0.06m dia, 0.03m deep.	
	3295	small ash fleck, fill for underlying post hole.	
	3296	red ash, as above.	
	3390	stake hole, 0.03m dia, 0.05m deep.	
	3403	stake hole, 0.08m dia, 0.15m deep.	
	3709	stake hole, 0.05m dia, 0.11m deep.	
734	3274	plank line cut, oriented E - W, ca 0.4m long and 0.05m wide, unclear whether it represents several vertical, or one horizontal plank	a wall line, oriented NW - SE, forming part of the southern long wall of the more northerly of the two buildings on the plot during this phase. A90 B5
	3286	stake hole, 0.05m dia 0.09m deep, directly NE of s3274	
735	3268	slightly laminated light brown ash layer.	clearance from hearths south of this area, on the plot outside gable A90, and stretching into the open area west of the southern building. A92 B5
	3271	laminated charcoal layer.	
	3280	silty charcoal layer, with few, fragmented bones.	
	3290	grey white redeposited ash.	
736	3170	mixed brown clayey silt with coprolites and fragmented bone	domestic rubbish layers on the northern yard. A90 B5
	3205	mixed black clayey silt with ash and charcoal	
737	2782	stake hole, 0.08m dia, 0.08m deep.	the gable line of a building along the edge of Stolpe's trench and cut by it. The construction appears to be post and pad-stone, with either a wattle wall or associated panelling. s2782 was difficult to group, and was finally grouped here despite its slightly higher stratigraphic position because its location made it clear that it also derived from the gable wall. A97 B5
	2802	stake hole, 0.06 x 0.05m, 0.07m deep.	
	2804	stake hole, 0.05 x 0.06m, 0.08m deep.	
	2805	stake hole, 0.06m dia, 0.13m deep.	
	2806	stake hole, 0.07m dia , 0.03m deep.	
	2960	small ash layer, with stone <0.2m dia, in corner of gable line.	
	2976	stake hole, 0.05m dia, 0.15m deep.	
738	2681	red, yellow and brown mixed silty clay, with fired clay, ash and charcoal	destruction level for building represented by g737. A98 B6
	2727	hard burnt silt, red and grey, with burnt stone ash and charcoal	

739	2621	rotten remains of a horizontal wooden beam, 2.5 x 0.12 x 0.02m.	rubbish and levelling layers over the northern yard of the plot and into the northern lane, relating to the use of the building g720&c. The whole is bounded to the north by a wooden beam, in the middle of the northern lane, evidently part of the surfacing of the lane. The plot boundary is marked by the break between s2753 and s2758. A98 B6
	2627	grey black silty sand with much charcoal.	
	2753	black grey sandy clay with much ash and charcoal.	
	2758	brown sandy silt, with clay, clacite, ash and charcoal.	
740	2942	small, light grey redeposited ash layer	two small ash layers along the edge of the plot, against the northern lane - probably marking the site of underlying post holes A98 B6
	2944	small, light grey redeposited ash layer	
741	2532	remains of two wooden beams oriented NW - SE along the length of the lane	post holes for a fence line parallel with the northern lane, on the northern edge of the plot, with associated wooden foundation for a surfacing of the lane (s2532). A102 B6
	2551	stake hole, 0.055m dia 0.1m deep	
	2645	post hole 0.1m deep on the edge of the northern lane	
	2646	probable post hole, 0.2m dia, 0.2m deep, on the edge of the northern lane	
	2657	post hole 0.3m dia 0.2m deep	
	2783	stake hole, 0.1 x 0.08m, 0.1m deep	
	2943	post hole, 0.1m dia, 0.03m deep	
742	2624	black grey silty sand with much bone and charcoal, and some clay.	rubbish layers in the northern lane, with much household debris, but no substantial evidence for metal working in the area. s2628 extends over the edge of the yard, with no evidence for a fence line. A102 B6
	2628	grey brown silty sand with clay, ash and charcoal	
743	2544	black brown sandy silt with much charcoal and bone	rubbish layers in the northern lane. The wood fragments in s2586 may derive from a wooden surfacing on the lane, such as planking, or a redeposited layer of wood chips. A102 B6
	2586	black brown sandy clay (or clayey silt with sand), ash, charcoal and wood fragments	
	2590	black grey sandy clay (or clayey silt with sand) with ash, charcoal and organic material	

744	2526	light brown sandy silt with domestic debris, containing a spread of stones on the northern edge of the plot	sill stones and other constructional details relating to a building oriented NW - SE, parallel to the northern lane. s2526, & s2535 are displaced by later levelling. Measurements for s2535 and s2536 are missing. A100 B6
	2535	ca. 10 stones, <0.15m dia, oriented NW – SE	
	2536	single large stone, probably pad stone for a door jamb	
	2537	fired clay, charcoal and ash, in a disturbed burnt deposit	
	2548	stake hole, 0.06m dia 0.11m deep	
	2549	stake/small post hole, 0.12 x 0.08m, 0.105m deep	
	2558	domestic rubbish deposit around and contemporary with s2526	
	2803	stake hole, 0.05 x 0.04m, 0.04m deep	
745	2521	light brown sandy silt with ash, charcoal and much bone	domestic rubbish layers on the northern plot. A101 B6
	2529	mixed layer, with much ash, charcoal and burnt bone	
746	3178	clean, white redeposited sand, virtually find free	a spot of sand in the southern building, strongly resembling the sand used for casting floors in other buildings e.g. A66. A92 B5
747	2525	light brown sandy silt, with ash, clay and charcoal	extensive rubbish layer perhaps relating to a period of abandonment. NB this deposit is stratigraphically later than g649, though it could perhaps date from the same period. A101 B6
	2539	yellow white redeposited ash	
	2556	white redeposited ash	
748	2485	white redeposited ash	redeposited ash layers, relating either to the use of the possibly contemporary building, or to a levelling and resurfacing of the plot after g747, for reasons of hygiene. A101 B6
	2520	white redeposited ash	

749	2465	stake hole, 0.07m dia 0.07m deep	a diffuse spread of stake holes over g748, and relating to the use of that surface of the yard, or to the extension of building g750 over the yard. No clear structural associations. A103 B7
	2466	stake hole, 0.08m dia 0.04m deep	
	2467	stake hole, 0.1 x 0.08m, 0.09m deep	
	2468	stake hole, 0.05m dia, 0.07m deep	
	2469	stake hole, 0.03 x 0.04m, 0.04m dia	
	2470	stake hole, 0.1 x 0.08m, 0.09m dia.	
	2550	bottom of stake hole, 0.04m dia, 0.01m deep.	
	2552	bottom of stake hole, 0.08 x 0.045m, 0.03m deep.	
	2553	stake hole, 0.1m dia, 0.2m deep.	
750	2358	packing of ca 20 stones <0.2m dia in gravel, the latter possibly an eaves drip.	sill stones relating to building represented also by g749 &c, and the floor layer associated with the construction of this wall line. A103 B7
	2461	light brown clay, mixed with sandy silt, with ash and charcoal.	
	2483	brown sandy silt, filled with gravel, probably a part of s3458.	
751	2379	slightly laminated grey black and white sandy silt, with clay, fired clay, calcite, ash and charcoal	layers accumulated inside building g749 &c, during its daily use. The finds from these deposits are domestic, rather than industrial, in character. A103 B7
	2380	laminated sandy silt, black, white and grey, with ash and charcoal	
	2403	grey white sandy silt, with charcoal and ash	
752	2372	stake hole, 0.09m dia, 0.11m deep	a diffuse group of stake holes concentrated on the area of the southern wall line of a building in the northern part of the plot (A103). They are grouped together on the basis of their similar stratigraphic relationships and physical proximity, and represent builds and repairs of a part of the southern wall of A103, which is exceedingly fragmentary.
	2376	stake hole, 0.1m dia, 0.12m deep	
	2377	stake hole, 0.07m dia, 0.15m deep	
	2378	post hole, 0.12m dia, 0.12m deep	
	2394	stake hole, 0.04m dia, 0.04m deep	
	2397	stake hole, 0.05 x 0.03m, 0.09m deep	
	2398	stake hole, 0.06m dia, 0.155m deep	
	2399	stake hole 0.04m dia, 0.15m deep	
	2400	stake hole, 0.07 x 0.05m, 0.08m deep	
	2401	stake hole, 0.04m dia, 0.09m deep	
	2402	stake hole, 0.055m dia, 0.14m deep	

753	2392	black sandy silt, with large amounts of charcoal, some clay and ash.	burning and levelling of building g752&c. A103 B7
	2371	silty clay, of varying colour, with admixture of charcoal and ash.	
754	2374	stake hole, 0.06m dia, 0.07m deep.	a group of four stake holes in the southern wall line of the northern building. A103 B7
	2375	stake hole, 0.1m dia, 0.07m deep.	
	2395	stake hole, 0.05m dia, 0.06m deep.	
	2396	stake hole.	
755	2366	stake hole 0.06m dia 0.11m deep	a group of three stake holes in the area of the southern wall of the northern building. A110 B7
	2370	stake hole 0.08 x 0.06m, 0.075m dia	
	2471	stake hole 0.08m dia, 0.1m deep	
756	2365	light brown sandy silt, with ash and clay, and some charcoal	this small deposit is focussed on a limited area at the edge of the northern building. The amount of stake holes in the area suggest that this may respect an internal division, probably for a room. A110 B7
757	1900	brown sandy silt, with much stone < 0.15m, and some large, unbroken bones	stone packings along the northern plot boundary, against the northern lane. Possibly sill stones for a fence or wall bounding the plot. A110 B7
	1920	stone packing of ca 10 stones <0.15m, and several large bones	
	2352	black sandy silt, with so much stone that it could almost be called a stone packing, and locally laminated with ash.	
758	1672	redeposited ash layer, with burnt stone, cut by many stake holes	ash deposits on the boundary between the northern lane and the plot. These may be structural in some way, given the number of stake holes in this area, and the shattered stone packing at the bottom of the ash layer. The group may, however, be merely cleared ash from a domestic hearth. A103 B7
	1895	light brown redeposited ash, with large, intact bones, and a few stones	
759	1074	brown black sandy silt with much charcoal, ash and burnt bone	spreads of domestic rubbish along the plot boundary by the northern lane. s1074 contains four worn stones in a row, forming the threshold of a door or gate. A110 B7
	1087	dark grey sandy silt with much burnt bone	
	1759	dark brown silty sand with charcoal and ash	
	1762	mixed brown silty clay with ash, charcoal and burnt stone	

760	1001	yellow white redeposited ash, with burnt bone	domestic rubbish thrown out into the northern lane. A112 B7
	1034	dark brown sandy silt, with much bone and stone, and lenses of ash	
	2418	charred plank	
761	867	light brownish grey sandy ash with charcoal	redeposited ash layer, probably related to levelling and filling for the construction of a floor in the northern building. tpq from coin AD 803. A112 B7
	896=834	light grey yellow redeposited ash, with charcoal, fired clay and bone	
762	852	dark brown sandy silt with some burnt stone, and clay & charcoal	domestic rubbish in the northern building. A112 B7
	857	brown sandy silt, with ash and charcoal	
763	836	dark brown sandy silt with charcoal	domestic rubbish in the northern building. A113 B7
	840	yellow red, redeposited ash	
	842	dark brown sandy silt with charcoal	
	843	dark brown sandy silt with ash and charcoal	
	847	grey redeposited ash with charcoal	
764	815	dark brown sandy silt with charcoal, clay and ash	domestic rubbish in the entrance to the northern building. tpq from coin AD 898. A113 B7
	819	dark brown sandy silt with charcoal	
	829	dark brown sandy silt with charcoal and ash	
765	784	with charcoal, diffuse boundaries.	domestic rubbish in the northern lane and entrance to the northern building. A114 B7
	803	dark brown sandy silt with charcoal and ash, diffuse boundaries with s784.	
	905	light grey brown redeposited ash layer.	
	1713	light grey brown, slightly laminated ash.	
766	775	dark brown sandy silt with much bone, and bone/antler working waste.	domestic rubbish in the northern lane. A114 B7
	783	grey brown clay, with bone and stone (large and small).	
767	769	grey white redeposited ash with charcoal	ash layers redeposited in the northern lane, deriving from the use of building g787 &c. A117 B8
	773	grey white redeposited ash with burnt bone	
	779	grey white redeposited ash, with much bone	
	798	yellow white redeposited ash, with charcoal and burnt bone	

768	673	loose brown sandy silt with much bone, some of it large and intact	domestic rubbish layers in the northern lane, with a tpq of AD 914, from an Arabic coin. A117 B8
	759	brown sandy silt with much bone, and charcoal	
769	671	grey white redeposited ash with crushed and burnt bone	domestic rubbish in the northern lane. A117 B8
770	450=660	loose dark brown sandy silt with much bone	domestic rubbish in the northern lane, and spread into the plot - deriving from the use of a building represented by the sill stones in s639 and s654. A117 B8
	639	dark brown sandy silt with bone and a stone packing on the N. edge	
	654	grey black sandy silt with much displaced stone	
771	898	dark black brown silty sand, with areas of large bones	domestic rubbish layers in the northern lane, given a tpq of AD 765 by a coin in the lowest layer i.e. s957. A114 B7
	922	dark brown silty sand with much bone, both large and small, and burnt stone	
	925	brown grey clayey silt with ash and charcoal, and much bone	
	953	dark brown gravelly silt with charcoal and some bone	
	957	brown sandy silt with much charcoal and bone	
	962	dark brown sandy silt, with much bone	
	965	gravel and small stones in s962, possibly water-sorted.	
	987	dark brown sandy silt with ash and charcoal.	
	988	dark brown sandy silt with much charcoal and burnt bone.	
772	966	grey brown slightly laminated redeposited ash layer.	domestic rubbish deposits, which may, in the case of s991, contain displaced sill stones from the northern long wall of the northern building. A114 B7
	991	grey brown laminated redeposited ash, with much burnt stone.	
773	682	dark grey sandy silt, in a line oriented NW-SE.	s682 appears to be a floor or occupation layer relating to the post hole s695, the whole providing limited structural evidence for a building here. A116 B7
	695	post hole in s682, 0.3m dia, with a few small stones as packing.	
774	818	dark line, slightly undulating, marking line of a wattle wall or fence	the line of a fence or wall, parallel with the northern lane, along the northern boundary of the plot. A116 B7

775	854	brown grey silty sand with ash, charcoal, fired clay and calcite	rubbish deposits over the surface of a yard north-west of the building represented by g xxx. There is a remote possibility that these are actually 'occupation' deposits in an enclosed area, but the nature of the layers makes this relatively unlikely, unless they derive from an abandonment of the building, and consequent dumping. A113 B7
	960	black brown silty sand with much bone, ash, charcoal and a little fired clay	
	992	dark brown sandy silt with lenses of ash, wood fragments and much bone	
	1013	grey brown sandy silt with much bone and stone 0.05 - 0.1m dia, lenses of ash and clay, loom weights	
776	1610	a roughly oval stone packing of c. 50 stones, 0.1-0.15m dia, in one layer, pressed into the underlying surface	possibly the remains of a cobbled path or stone packing for levelling, across the surface of the yard, and oriented N - S. A112 B7
	1630	stone packing of small stones 0.1-0.15m dia in silty sand, with birch bark.	
777	1607	brown silty sand, with small lumps of clay and stone	redeposited ash and charcoal layers, around the south-western end of a building, possibly functioning as fill in a subsidence (which is the result of an underlying ditch). A112 B7
	1665	laminated black and white redeposited ash and charcoal	
	1671	thin, redeposited charcoal layer, with much wood and bark	
	1675	yellow white redeposited ash	
	1698	white grey redposited ash with extensive animal disturbance	
	1712	light grey brown redeposited ash with little bone and stone	
	2364	white grey redeposited ash with clay and charcoal	
778	1819	brown black redeposited charcoal with a certain amount of domestic rubbish from the underlying layer	occupation layers inside building A103, which is an extension over the northern yard of a building initially only present as a gable. Partially contemporary with g749. A103 B7
	1845	grey brown redeposited ash	
	1853	thin brown sandy silt with much charcoal	
779	1037	very variable brown black sandy silt with wood fragments, much bone, ash, and charcoal	fills in a subsidence hollow in the southern edge of the northern building over the line of an earlier ditch. A112 B7
	1093	brown grey sandy silt with fired clay, ash, wood fragments and charcoal	
780	1080	light yellow, clean redeposited ash	fill in a subsidence hollow, as g779, in the southern edge of the northern building. A112 B7

781	1017	light grey brown sand with a little charcoal, fired clay, ash and bone.	fill layers in a subsidence hollow in the corner of a building. These deposits probably functioned as a floor and living surface, given the degree of lamination and nature of the debris in the soil. The decayed wood fragments in s1065 probably represent the remains of a wood chip floor covering. A112 B7
	1065	grey brown silty sand with decayed wood, fired clay, ash, charcoal, bone.	
782	1035	clean orange yellow redeposited ash.	redeposited ash, functioning as a fill, and sealing layer in a subsidence hollow. A112 B7
783	935	light yellow brown sandy silt with ash, charcoal and decayed bark.	redeposited levelling fills underlying and related to the floor surface g761. A112 B7
	939	lens of yellow green clay, with charcoal.	
	940	lens of yellow green clay with charcoal.	
	947	light brown sandy silt with much ash, some charcoal and decayed wood.	
784	790	yellow ash, spread over a thin surface of charcoal	use and clearance layers associated with hearth g803 in the southern building. A118 B8
	797	yellow and black laminated ash with charcoal	
	805	yellow and black ash laminated with charcoal	
	877	black charcoal and ash deposit	
785	684	black brown sandy silt with iron objects, slag, clay, ash and charcoal	occupation layers in the central area of the northern building. A116 B7
	753	grey brown sandy silt with ash and charcoal	
	796	brown sandy silt with arge bones, and varying sized stones	
	2478	sandy silt with ash and charcoal	
786	697	yellow and brown flecked ash and sandy silt layer	plough damaged deposits lying in the area of a building, and deriving from its use. Very high risk of contamination and residuality. A122 B8
	742	brown sandy silt with ash flecks and charcoal	
	747=298	brown sandy silt with charcoal and flecks of ash coming through from the layers underneath	
	774	brown sandy silt, with ash and charcoal	
787	638	yellow white ash, with brown sandy silt, bone, clay and charcoal	plough damaged deposits in the area of a building and deriving from its use. High risk of contamination and residuality. A122 B8
	668	brown sandy silt with ash charcoal, and bone	

788	630	dark brown sandy silt with bone, fired clay ash and charcoal	deposits immediately underlying the topsoil and so disturbed and plough damaged that they must be interpreted as effectively part of the plough soil. A122 B8
	631	brown sandy silt, with bone, ash and charcoal	
	633	description missing	
789	1474	stake hole, 0.1m dia, 0.2m deep	the construction of a hearth in the southern building, 0.75m wide, 1.3m long, and so hard burnt that it was difficult to distinguish the structural details from the surrounding s-units. The associated stake/post holes suggest a spit or pot hook associated with the hearth. A105 B7
	1569	stake hole, 0.1m dia, 0.18m deep	
	1614	oval burnt clay 'bowl' with a packing of stones 0.05-0.15m dia concentrated towards the western end	
	2385	stake hole, 0.1 x 0.05m, 0.12m deep, containing charcoal	
	2388	stake hole, 0.03m dia,0.05m deep, containing wood fragments	
790	1602	black sandy silt, mostly charcoal	use of hearth g789, in situ. A105 B7
	1603	yellow white ash	
	1604	laminated fired clay and charcoal	
	1605	black and yellow laminated ash and charcoal	
	1613=1574	yellow white sandy ash, in situ	
791	1070	white silty ash with fired clay and charcoal	clearance and floor deposits related to the use (probably) of hearth g792, or to g789. A105 B7
	1090	black, laminated charcoal and ash deposit	
	1116	light yellow grey ash, grading to darker grey black	
	1345	light grey brown silty ash, eroded over winter exposure	
	1448	black laminated silt with much charcoal	
	1461	laminated white grey ash with noticeable amounts of fish scales	
792	1447	white, in situ ash, over an area 1.5 x 0.8m, containing burnt stone in the lower part of the deposit	possibly redeposited, but more probably in situ, this layer can be interpreted as a rebuild/repair of the hearth g789. A106 B7
793	1063	post hole east of s1077	hearth construction in the southern building, with a large, heat cracked stone 0.4 x 0.3 x 0.25m, at the NW end, and a post hole at the SE end. The stone probably functioned as support for a bellows, implying that the hearth was primarily industrial rather than domestic. A106 B7
	1077	hard burnt clay and stone mixed with laminated ash and charcoal, in an area 1.6 x 0.9m. A large stone at the north-western end may be a support for bellows.	

794	932	laminated red, white and brown ash	clearance layers relating to the use and eventual destruction of hearth g793. A106 B7
	938	yellow white ash	
	1031	laminated charcoal with ash	
	1041	black laminated silt, with lenses of ash and clay, but mostly consisting of charcoal.	
	1044	slightly laminated mixture of ash, charcoal and clay.	
	1045	laminated ash, charcoal and lenses of clay, mostly charcoal.	
	1048	white, sandy silt, mostly ash, with charcoal and fired clay.	
	1068	laminated light brown ash.	
795	1049	black charcoal layer.	use and clearance layers related to hearth g793 in the southern building. A106 B7
	1098	black, mostly charcoal layer, with a small amount of sand and gravel.	
	1120	black charcoal, slightly laminated with brown, fired clay.	
796	1099	light brown silt, mixed with stones 0.05-0.2m dia.	fill layers over hearth g792, prior to its renovation as g793. A106 B7
	1102	dark brown sandy silt without stones	
797	1024	laminated sandy clay with ash and charcoal, containing burnt stones, 0.05 - 0.1m dia, in a rough oval 0.8 x 1.5m.	construction/repair of hearth, on same site as g792 in the southern building. A111 B8
798	983	laminated grey brown sandy silt with much charcoal, ash and fired clay	use and clearance layers associated with the hearth, g797. s999 is apparently water sorted and may, by its presence immediately adjacent to the hearth, indicate a hole in the roof through which rain fell, possibly a smoke hole. A111 B8
	999	water sorted gravel in black silt light grey white ash patches	
	1000	laminated black and white charcoal and ash deposit	
	1003	yellow ash patch, cut on the eastern edge by Stolpe's excavations	
	1015		
799	1008	spread of stones in brown sandy silt, close packed in a square profiled, cut feature ca 0.4m deep.	sill stones packed into a rectangular trench cut ca 0.4m deep, 0.4m wide and 1.2m long, cut away at both ends by 1990 trial trench and Stolpe's excavations. A ritual deposit of 3 iron amulet rings, the wing bones of an eider duck, the shoulder blade of a man, and an oxbow, and a coin dated AD 807 were found in this feature. A111 B8
	1026	lower part of stone packing in rectangular cut, containing a coin and ritual deposits.	

800	949	black brown charcoal deposit.	clearance and use layers associated
		laminated ash, charcoal and	with the use of hearth g801. Traces
	950	fired clay deposit.	of wood in some of these deposits
		dark black brown silty sand,	could possibly indicate a flooring of
	963	mostly charcoal.	wood chips, or chips from fuelling
		light yellow brown ashy silt,	the fire in the hearth. A115 B8
	967	with charcoal.	
		finely laminated charcoal and	
	969	ash layer.	
		white yellow ash	
	975	laminated black and white ash	
	977	and charcoal layers.	
		yellow and black laminated ash	
	1006	and charcoal.	
801	982	thin, highly laminated ash,	reconstruction/repair of hearth g798,
		charcoal and fired clay layers	with inseparably associated use
		with much burnt stone 0.1 -	layers, in the southern building.
		0.15m, in a rough oval, 0.8 x	A115 B8
		1.5m	
802	814	brown black charcoal layer	use and clearance layers associated
	883	laminated yellow ash with fine	possibly with the use of g801, but
		lenses of charcoal	possibly also with a hearth
	889	laminated yellow ash with fine	constructed on or in s937, and later
		lenses of charcoal	removed. The ambiguous
	900	black sooty charcoal layer	stratigraphic position of s937 has led
	911	laminated black charcoal with	to its being assigned to this group,
		ash lenses, and some fired clay	but it is possible that it should
		light brown ash	instead belong to g800. s964
	928	light yellow brown ash	contains only material from this
	931	laminated yellow brown ash	group, but may be contaminated, as
	937	with irregular hollows in its	it subsided into an underlying
		upper surface, possibly from the	hollow. A115 B8
		removal of stones	
		laminated dark brown silty sand	
		with ash	
	948	dark brown sandy silt with much	
		charcoal	
	955	yellow white redeposited ash	
		yellow white ash, with charcoal	
	956	mixed ash, charcoal, clay	
		black and yellow, ash, charcoal	
	959	and fired clay	
	964		
	968		
803	913	yellow brown clay oval, not	reconstruction/repair in the continual
		heavily burnt, but covered with	use and renovation of the industrial
		ash and charcoal.	hearth in the southern building (see
			also g801 &c). A118 B8

804	845	laminated yellow ash and fired clay, with shattered and burnt stones forming a rough oval 1.2 x 0.6m large, with a large stone (0.6 x 0.3 x 0.25m) at the northern end.	hearth, with associated stake and post holes for a fire screen or other constructions. The large stone, which continues in use through various rebuilds of this hearth (g798 &c) was probably the support for a bellows, and suggests an industrial use for the structure. A121 B8
		stake hole, 0.1 x 0.08m.	
	849	stake hole, 0.1 x 0.05m.	
	850	small post hole, 0.15m dia.	
	851	irregular small post hole, 0.15 x 0.1m	
	855	stake hole, 0.1 x 0.08m.	
	856		
805	795	dark brown black sandy silt with large amounts of charcoal.	clearance from hearth g804, in the southern building. A121 B8
	804	dark brown sandy silt with large amounts of charcoal.	
	807	grey brown clayey silt with fired clay, ash and charcoal.	
	1615	white yellow ash.	
806	1036?	yellow ash, with burnt stones, and some burnt and unburnt bone .	clearance and use layers associated with the use of hearth under g838. A104 B7
	1095	grey sandy silt, with few stones, ash, charcoal and clay.	
	1433	white ash.	
	1567	white yellow redeposited ash.	
	1575	laminated black and grey ash and charcoal.	
	1616=1346	grey white redeposited ash.	

807	1518	laminated black charcoal with sandy silt, ash and calcite	use and clearance deposits associated with the use of hearth g789. Essentially contemporary with the very similar g790. A105 B7
	1554	grey black charcoal mixed with sandy silt	
	1558	white yellow ash lens	
	1561	black charcoal layer	
	1565	white yellow ash	
	1566	grey black charcoal mixed with sandy silt	
	1572	black charcoal deposit	
808	981	small post hole, 0.12m dia	post and stake holes stratigraphically, and structurally, associated with hearth g789 - possibly forming a fire screen. A105 B7
	1063	post hole 0.3m dia	
	1091	stake hole, 0.06m dia	
	1103	small post hole, 0.11m dia	
	1117	stake hole 0.08m dia	
	1483	post hole: cut 0.36 x 0.3m, post 0.17m dia, 0.17m deep	
	1484	oval post hole 0.12 x 0.08m, 0.25m deep	
	1485?	stake hole, 0.05m dia, 0.08m deep	
	1486	post hole, 0.12m dia, 0.12m deep	
	1487	stake hole 0.08 x 0.06m, 0.11m deep	
	1488	post hole, 0.12 x 0.07m, 0.14m deep	
	1489	stake hole, 0.07m dia,0.19m deep	
809	976	yellow ash, with sand and gravel	ash spreads, probably redeposited. This group marks the southern long wall of the southern building on the plot. Maybe on the edge of the southern lane. s986 and 976 have been grouped here as their stratigraphic relationship with s989 (g810), in the southern lane, is ambiguous and they fit very well in this group both structurally and on the grounds of its soil description. A105 B7
	986	grey white ash, with an admixture of gravel	
	1004	yellow white slightly gravelly ash	
	1036	slightly gravelly sandy silt, mostly yellow ash	
810	989	dark brown sandy silt with fired clay, calcite charcoal and bone, and a thin layer of wood fragments at the bottom of the deposit	rubbish layers in southern lane, containing the fired clay and wood deriving from a wall in this area (probably founded on g809). A119 B7
	990	grey sandy silt, containing charcoal and bone	
811	3002	grey brown clayey silt with fired clay, charcoal, ash, little bone or stone.	rubbish, or possibly fill, layer in the southern building. A96 B5

12	846	brown sandy silt mixed with charcoal, and relatively little bone.	domestic rubbish deposits in the southern lane, immediately adjacent to the building on the northern plot, and showing evidence of water dropping from the eaves of that building. s846 may be a partial vegetation or use horizon over these deposits. These post-date the destruction by fire of the latest building on the southern plot (A58), as s912 lies over the fired daub fill of the drainage ditch along the northern wall of that building, which derives from the destruction of the wall. A119 B7
	863	dark brown sandy - gravelly silt, water sorted in areas, with much small, broken bone and fish bone.	
	869	dark brown sandy silt with much crushed and broken bone.	
	888	water sorted gravelly sand. grey brown sandy silt with clay, ash and charcoal.	
	927		
13	771=748	grey brown sandy silt with ash, bones, fired clay and other domestic rubbish.	domestic rubbish layers in the southern lane, over the area of the earlier jetty. A119 B7
	839	dark brown sandy silt with large, horizontal bones in the lower part of the layer.	
	1088	dark brown sandy silt with fired clay, charcoal and bone.	
14	772=683	grey brown silty clay mixed with domestic rubbish	resurfacing of the southern lane, later worn away by traffic. A119 B7
	810	light grey brown clayey silt	
15	760=764 =766	lenses of redeposited grey ash, with charcoal bone, and a little fired clay	ash thrown out into the southern lane, possibly deliberate levelling and filling of holes. A120 B8
16	670	black brown sandy silt with much large bone, fish bone and scales, and wood fragments, ash and charcoal	domestic rubbish thrown out into the southern lane, over the area of the earlier jetty. The rapid build-up of rubbish in this area during this phase suggests that the lane was not heavily used, and may, indeed have functioned more as an open area than a lane. A120 B8
	675	dark brown sandy silt with bone dark brown sandy silt with shattered bone and stone	
	689	brown grey clayey silt with bone, fired clay and charcoal	
	762		
17	690	dark brown sandy silt with bone and stone	redeposited domestic rubbish in the southern lane. A120 B8
	744=688= 691	grey black sandy silt with much ash, bone, charcoal and other domestic rubbish	
18	3153	laminated, many-coloured silt, with ash, fired clay, clay and charcoal.	laminated deposits resulting from work within a metal workshop. A92 B5
	3157	laminated ash, with clay, fired clay and charcoal, and iron corrosion spots	

819	826	grey brown clayey silt with overlying water sorted gravel and sand.	eaves drip relating to a building on the southern plot which was destroyed by ploughing. This eaves drip lies stratigraphically later than the latest building (A58)which could be identified on the plot, and indicates that at least one phase of occupation was completely destroyed by agriculture. A60 B8
820	1062=1064	mixed brown sandy silt with some stone, ash, charcoal and fired clay.	occupation layers deriving from the use of the southern building represented by g492 and g493, and respecting its southern wall line. A105 B7
	1069	dark brown silt with little stone, charcoal and fired clay.	
	1072	light brown sandy silt with little stone, bone, fired clay and charcoal.	
821	942	black sandy silt, with charcoal.	remains of a floor in the southern building probably contemporary with the construction of hearth g797. A105 B7
	1042	green black redeposited clay with much charcoal.	
	1050	grey green clayey silt with charcoal.	
822	661	redeposited ash fill in small post hole	a small post hole and two stake holes, probably contemporary with g804, together with a major structural post hole. The group forms part of the southern wall line for a workshop on the southern half of the plot. A118 B8
	667	redeposited ash fill in cut	
	761	charcoal and fired clay fill in cut	
	770	post hole driven through cut filled by s667/761	
	943	stake hole	
	944	stake hole	
823	768	dark brown sandy silt with bone and charcoal	layers built up within the southern of the two buildings on the plot, against its southern long wall, and resulting from the use of hearth g793. A119 B7
	817	dark brown sandy silt with bone and charcoal	
	862	dark brown sandy silt with large bones and wood fragments	
	897	dark brown sandy silt with bone, charcoal and fired clay	
824	822	dark grey brown silty sand with gravelly patches and much charcoal	laminated occupation deposits within a building on the northern part of the plot. A116 B7
	844=853	dark grey brown silty sand with charcoal, clay, fired clay	
	872	light grey brown sandy silt, with ashy patches, charcoal, clay and fired clay	
	879	light grey brown sandy silt with ash patches, charcoal, clay and fired clay	
	881	dark grey brown silty sand with clay, fired clay, ash, charcoal and calcite, and some organic material - wood chips?	

825	1837	packing of small stones <0.2m dia, in dark brown sandy silt	a paved path oriented N-S across the plot, and stratigraphically related to the building whose south wall is g799. A112 B7
	1844	"	
	1846	"	
	1848	"	
	1854	similar stone packing, slightly	
	1867	cut into the underlying surface	
826	1861	charcoal spread	redeposited ash layers lying under g825, but perhaps relating to the fill/packing of the path and thus belonging to the same structure. A112 B7
	1862	small layer of grey white ash.	
	1874	white ash patch with grey green clay.	
		white ash patch.	
	1878	small layer of grey	
	1884	redeposited ash with wood flecks.	
	1892	white redeposited ash with burnt bone.	
827	1894	black clayey silt with wood fragments.	layers relating to fill and resurfacing of the northern part of the plot. A110 B7
	2359	black sandy silt.	
828	1678	brown clayey silt with ash, charcoal and fired clay.	post hole and associated packing in the northern wall line along the plot boundary, adjacent to the northern lane. A112 B7
	1883	brown sandy silt with charcoal and small lumps of clay.	
829	1096	limited patch of in situ ash containing 4 burnt stones	remains of a wall line associated with sill stones g757. A110 B7
	1101	charred plank, 0.3 x 0.18m, in situ	
830	2350	mixed brown black sandy silt with large ash lenses and charcoal.	redeposited ash layers in the northern lane, with brown sandy silt deriving from their exposure to weathering. Rubbish deposits, perhaps partly for resurfacing the lane and plot. A103 B7
	2419	grey black sandy silt with charcoal and animal bone.	
	2435	light grey redeposited ash layer.	
		brown grey sandy silt	
	2451	find free.	
		white grey redeposited ash, with	
	2452	charcoal.	
		ash, clay, bones and charcoal.	
	2487	light grey redeposited ash.	
		brown grey slightly laminated	
	2501	redeposited ash with burnt and shattered stone, and charcoal.	
	2518		
831	1818	yellow brown clayey sand with ash and charcoal.	rubbish/occupation layers lying on the plot, against a wall on the northern plot boundary, which may be a boundary marker, or the northern long wall of a building. A110 B7
	1841	grey ash, with lenses of clayey sand and charcoal.	
	1857	light brown ash, with charcoal and sand.	
832	1699	green grey redeposited sandy clay, with some charcoal	clay layer - may be the edge of a floor, but is more likely to be a part of the structure of a wall or fence along the northern plot boundary. A110 B7

833	2482	mixed brown sandy silt with gravel, bone, ash, clay and charcoal	fill and rubbish layers in the area of the gable entrance to the building on the plot. A101 B6
	2489	light brown sandy silt with gravel, bone, ash, clay and charcoal	
834	2479	white grey ash	clearings from a hearth in the northern building, probably in the area of Stolpe's excavations. A103 B7
	2481	black brown, laminated charcoal, with ash and clay	
835	1876	brown silty clay with charcoal.	s2363 is probably a clay floor for a building (A103). The presence of loom weights among the finds from the context suggests a domestic use. The two post holes (the measurement of s2503 is missing) are grouped here because their stratigraphic relationship indicates the probability that they formed part of the gable of this building, or a dividing wall within it. A103 B7
	2503	post hole, 0.53 x 0.44m, 0.33m deep.	
	2522	post hole, 0.35m dia, 0.31m deep.	
	2363	green brown silty clay with ash and charcoal.	
836	2509	black brown sandy silt with much burnt and shattered stone and bone, and some ash and charcoal	rubbish layer in the northern lane, associated with the use and construction of building g744 &c, and covering virtually the whole surface of the lane. A101 B6
837	2417	brown black sandy silt with flecks of burnt clay, ash, clay and much charcoal	occupation and, possibly, fill layers pre-dating hearth g838, and its use, in the southern building. These deposits, particularly s2417, were flooded over the winter of 1994/5, and walked on at the beginning of the following excavation season, and have therefore a relatively high risk of contamination with imported finds material. A104 B7
	2421	slightly laminated, black silt, mostly charcoal, with flecks of burnt clay	
838	2360	ca 20 shattered and burnt stones 0.05-0.1m	hearth remains redeposited as a levelling fill or floor resurfacing over the northern half of the southern building on the plot. A104 B7
	2387	yellow white ash, with burnt stones	
839	2382	stake hole, 0.05m dia, 0.1m deep	post/stake holes, deriving from the end wall of a building on the southern half of the plot. A104 B7
	2383	stake hole, 0.06m dia, 0.09m deep	
	2384	stake hole/small post hole, 0.1m dia, 0.09m deep	
840	2406	stake hole	stake holes forming a short line within the southern building on the plot, oriented NW - SE, and possibly deriving from the construction of a wall bench. See also g846. A104 B7
	2407	"	
	2408	"	
	2409	"	

41	2361	laminated black silt, mostly charcoal, with ash, and some bone	clearance from hearth, possibly g838. The curious colouring of s2404 seems to indicate the possibility of some sort of industrial process, probably with metal. A104 B7
	2404	yellow green ash, with fired clay, burnt stone, charcoal and calcite	
	2405	grey ash, with charcoal	
	2410	light grey ash, with charcoal and fired clay	
842	3045	stake hole, 0.09 x 0.08m, 0.07m deep	stake holes forming a fence or, more probably, a wall line in a building almost entirely outwith the excavation area, in the northwestern corner of the site. This wall line persisted over a long period of time, and over 0.1m of deposits built up against it, which may explain the very variable depth of the stake holes. A93 B5
	3046	stake hole, 0.07m dia, 0.3m deep	
	3057	stake hole, 0.04 x 0.05m, 0.14m deep	
	3069	stake hole, 0.04m dia, 0.2m deep	
	3070	stake hole, 0.035m dia, 0.16m deep	
	3080	stake hole, 0.03 x 0.035m, 0.095m deep	
	3081	stake hole, 0.04 x 0.03m, 0.1m deep	
	3090	stake hole, 0.03m dia	
	3107	stake hole, 0.04 x 0.05m, 0.14m deep	
	3113	stake hole, 0.04m dia, 0.16m deep	
843	2345	stone	spreads of rubbish, with some large stones, on the southern lane between the two plots and deriving from the use of the buildings both to north and south of the lane. There was a great deal of both bone and stone in concentrated on the southern side of the lane (s2345, s2346, s2347), and the larger stones may possibly have been supports for a wooden surfacing or paving, for which there is no other evidence. A44 B6
	2346	stone	
	2347	stone	
	2348	silty sand, with animal bone, ash and charcoal	
	2495	brown sandy silt with ash, charcoal, fired clay and bone	
	2496	grey redeposited ash with bone and charcoal	
	2498	grey brown sandy silt with ash, charcoal, fired clay and large bones	
	2505	loose, dark brown sandy silt with bone, charcoal and fired clay.	
	2508	grey white redeposited ash with a few large bits of charcoal, fired clay and bone	
	2570	grey brown silt with ash, charcoal, clay, fired clay and bone	
844	2494	light grey redeposited ash, with some bone and stone	redeposited layers of charcoal and ash cleared from a contemporary hearth in the southern building. A99 B6
	3131	black, redeposited charcoal	
	3133	grey white redeposited ash, with some bone and a little brown sandy silt	

845	3120=3118	grey brown silty clay - clayey silt, with much charcoal, little bone and stone	occupation layers within the southern building on the plot. The amount of rubbish in these deposits suggests an industrial use for the building, based on the (tentative) premise that a house would probably have been more frequently cleaned. A96 B5
	3137	grey brown sandy siltwith little bone and stone	
	3145	black redeposited charcoal with some bone	
	3192	grey black charcoal and ash lenses	
	3206	black sandy silt with clay and much charcoal	
	3210	brown sandy silt with charcoal, ash and bone	
	3211	grey white ash	
846	2729	stake hole/small post hole 0.1m dia, 0.1m deep	three stake holes in a line oriented NW -SE inside the southern wall of the southern building on the plot, and possibly relating to g840, as a part of the structure of a wall bench. A96 B5
	2730	"	
	2731	"	
847	3163	stake hole, 0.05m dia, 0.02m deep.	six stake holes, s3163-8 all very shallow, fill with a similar red-brown organic fill, probably decayed wood, and forming a small group possibly in the western end wall of the southern building on the plot. From these leads a curving fence line to the north, towards the southern wall of the northern building. A92 B5
	3164	stake hole, 0.05m dia, 0.03m deep.	
	3165	stake hole, 0.05m dia, 0.03m deep.	
	3166	stake hole, 0.05m dia, 0.02m deep.	
	3167	stake hole, 0.05m dia, 0.03m deep.	
	3168	stake hole, 0.05m dia, 0.03m deep.	
	3201	stake hole, 0.05m dia, 0.09m deep.	
	3208	stake hole, 0.06 x 0.05m, 0.07m deep.	
	3209	stake hole, 0.04 x 0.05m, 0.06m deep.	
	3300	stake hole, 0.06m dia, 0.06m deep.	
	3418	stake hole, 0.05m dia, 0.06m deep.	
	3419	stake hole, 0.07 x 0.06m, 0.1m deep.	
	3420	stake hole, 0.04m dia, 0.06m deep.	
	3421	stake hole, 0.03m dia, 0.12m deep.	
	3422	stake hole, 0.03m dia, 0.11m deep.	
	3540	stake/plank hole, 0.12 x 0.06m.	
	3542	stake hole, 0.08 x 0.07m, 0.08m deep.	

848	3216	laminated charcoal with ash.	occupation layers inside a building on the southern half of the plot, and consisting primarily of clearings from a contemporary hearth, but with a substantial content of rubbish. A92 B5
		white grey redeposited ash.	
	3366=3261	brown ash, with charcoal.	
	3375=3373 =3299	laminated ash and charcoal.	
	3378	laminated ash and charcoal.	
	3379	black, slightly laminated redeposited charcoal.	
	3387	yellow grey redeposited ash	
	3392	black grey laminated sandy silt with much charcoal, coprolites, fired clay, ash and clay.	
	3394		
849	2514	black brown sandy silt with large bones, and charcoal.	rubbish layers in the southern lane, over the area of the earlier jetty g600. A43 B5
	2517	brown sandy silt with large bones, a few stones and charcoal.	
	3354=2519	brown silt with clay, burnt and shattered stone, bone and charcoal.	
	3637	brown silt with charcoal, bone, fired clay and burnt stone.	
	3669	brown silt with large bones, and some burnt stone.	
	3770	brown grey sandy silt with bones, ash and charcoal.	
850	2351	brown black silt, mostly charcoal, with a little fired clay	hearth clearance deposits deriving from the use of g838, in the southern building. A104 B7
	2354	grey white ash with charcoal	
	2362	yellow brown ash, with charcoal	
851	2344	stake hole, ca 0.03m dia, 0.09m deep	structural elements in the building contemporary with hearth g789. A105 B7
	2349	bottom of post hole, largely cut away by Stolpe's excavation	
852	2992	stake hole, 0.05m dia, 0.05m deep	two stake holes, contemporary with the gable line g721, in the northern building. A90 B5
	2993	stake hole, 0.05m dia, 0.15m deep	
853	2757	brown sandy silt with much organic matter, particularly manure, ash and charcoal	dump and fill layers in the northern lane, pre-dating the building represented by the sill stones of g737. A95 B5
	2777	black grey clayey sand with large amounts of manure, wood chips, ash and charcoal	
	2977	compact, slightly laminated ash, charcoal and sandy silt, with fired clay	
	3084	grey black sandy silt with ash and charcoal	

854	3122	light grey, redeposited clay	very small layer, probably part of a wall line for the building in the NW corner of 1990 trench (1991 area A). A94 B5
855	2961	stake hole, 0.05m dia, >0.21m deep.	compact layers of redeposited ash inside the building at the western corner of the site, and respecting wall line g903 &c. These are structural elements, a floor and stake holes of unknown function, in this building. A94 B5
	3052	yellow white ash.	
	3053	stake hole, 0.06 x 0.05m, 0.14m deep.	
	3055	orange white ash.	
856	3087	thin layer of brown sandy silt with many stones <0.2m	stone packing, probably related to fence/wall line g842, possibly sill stones for the building inside or associated with that structure. A94 B5
857	3054	brown grey redeposited ash mixed with sandy silt, with fired clay and charcoal.	redeposited ash layers post-dating fence/wall line g842, but respecting it. A94 B5
	3060	pale brown redeposited ash, with charcoal and fired clay.	
858	3071	white orange redeposited ash, with fired clay and charcoal.	redeposited rubbish layers post-dating fence/wall line g842, and containing large amounts of metal-working debris, including an iron bloom from a bloom furnace. A94 B5
	3078	charcoal layer with burnt stone, fired clay, ash, clay, bone and metal working rubbish.	
	3085	grey black silt, mostly charcoal.	
859	2770	grey white, clean ash, probably redeposited.	ash and charcoal layers, between the two buildings. These deposits are contemporary with g640, and serve the same function as a resurfacing of the plot to seal underlying rubbish. A96 B5
	2771	charcoal, with ash flecks.	
	2780	grey white clean ash, with a little burnt bone, probably redeposited.	
	2798	grey white ash, with a little burnt bone.	
	2991	charcoal with burnt stone.	
	2994	white ash with charcoal.	
	2995	red grey ash with charcoal, fired clay and few other finds.	
	2996	grey white ash layer, relatively find free.	
	3000	grey white ash.	
	3003	black charcoal deposit with fired clay and ash.	
860	3093	brown black sandy silt, mostly charcoal, with fired clay and ash	redeposited charcoal layers in the southern building. A96 B5
	3106	charcoal with fired clay and few bones	
	3186	charcoal with fired clay, little bone, no stone	
	3204	grey redeposited ash, mixed with sandy silt, fired clay, and charcoal	

g861	3108	stone and large bone in brown clayey silt	this was interpreted during excavation as a rubbish pit, but it may be a stone packing with structural significance. A96 B5
g862	2999	grey brown clayey silt with little bone or stone, some fired clay and charcoal	rubbish layers between the two buildings. A96 B5
	3019	grey redeposited ash with little bone, some fired clay and charcoal	
g863	2486	lens of greenish silty clay	redeposited clay in the southern wall line of the northern building. A103 B7
g864	EMPTY		
g865	4177	stake hole, 0.08m dia	row of stake holes forming a continuation of the line of the southern edge of the second jetty foundation. A21 B2
	4178	stake hole, 0.1m dia	
	4179	stake hole	
	4180	stake hole, 0.08m dia	
	4181	stake hole, 0.08m dia	
	4182	stake hole, 0.08m dia	
g866	4183	stake hole, 0.08m dia	a row of stake holes at the north-western end of the jetty. Almost certainly out in the water - they possibly form part of a wattle structure around jetty. A21 B2
	4184	stake hole, 0.08m dia	
	4185	stake hole, 0.06m dia	
	4186	stake hole, 0.05m dia, uncertain	
g867	4187	stake hole, 0.07m dia	group of three stake holes, probably relating to g865, to which they are at right angles, and inside the jetty superstructure. A21 B2
	4188	stake hole, 0.07m dia	
	4189	stake hole, 0.05m dia	
g868	4190	stake hole, 0.07m dia	group of three stake holes, in the vicinity of g866, at the northernmost corner of the jetty superstructure. A21 B2
	4191	stake hole, 0.07m dia	
	4192	stake hole, 0.07m dia	
g869	4193	stake hole, 0.07m dia.	group of contemporary stake holes, probably structurally related to g865, but possibly forming the northern edge of a timber superstructure for the second jetty g144. A21 B2
	4194	stake hole, 0.07m dia.	
	4196	stake hole, 0.1m dia.	
	4197	stake hole.	
	4198	stake hole.	
	4200	stake hole, 0.08 x 0.08m.	
g870	4195	stake hole, 0.07m dia	post in post hole, a part of a timber superstructure for the second jetty, at its junction with the stone foundation. A21 B2
	4199	post, in post hole, immediately below s4195	

871	4102	stake hole, 0.05m dia, 0.13m deep	stake holes forming a fence line oriented NE - SW across the site, forming a boundary between the stone packings of the quay foundation and the plot. See also g872. A64 B1
	4103	stake hole, oval, 0.09 x 0.06m, 0.07m deep	
	4104	stake hole, oval, 0.1 x 0.07m, 0.25m deep	
	4120	stake hole, 0.07m dia, 0.47m deep	
	4121	stake hole, oval 0.1 x 0.05m, 0.6m deep	
	4122	stake hole, oval 0.1 x 0.05m, 0.6m deep	
	4123	stake hole, 0.1m dia, ca. 0.4m deep	
	4124	"	
	4125	"	
	4126	"	
	4132	stake hole, 0.05m dia, wood fragments	
	4133	"	
	4134	"	
	4147	stake hole, 0.1m dia, 0.3-0.4m deep	
	4148	"	
	4164	"	
	4167	"	
	4168	"	
	4169	"	
872	4146	stake hole, 0.1m dia, 0.2-0.4m deep	stake holes forming a fence line east of the quay foundations (g457), probably marking the western boundary of the plot with g871. A64 B1
	4149	"	
	4150	"	
	4151	"	
	4152	"	
	4153	"	
	4154	"	
	4155	"	
	4156	"	
	4157	"	
	4158	"	
	4159	"	
	4160	stake hole, 0.05m dia	
873	4135	stake hole, ca 0.05m dia	stake holes, some with decayed stakes in them forming an extension to the northern boundary fence (g874 &c), or a superstructure for the quay foundation (g457), on the same line as the boundary fence. In the former case, these post date g874, in the latter, they pre-date it. A10 B2
	4136	"	
	4137	"	
	4138	"	
	4139	"	
	4140	"	
	4141	"	
	4142	"	
	4143	stake hole, 0.1m dia ca 0.4m deep	
	4145	stake hole, ca 0.05m dia	
	4161	"	
	4162	"	
	4163	"	
	4165	"	
	4166	"	

s74	4127	plank hole, 0.17 x 0.03m	stave fence line, continuation of the northern boundary fence observed in the Eastern Area (g350 &c). A10 B2
	4128	plank hole, 0.16 x 0.035m	
	4129	plank hole, 0.16 x 0.03m	
	4130	plank hole, 0.16 x 0.03m	
	4131	plank hole, 0.1 x 0.04m	
s75	4069	grey brown clayey silt with much ash and charcoal and very large amounts of loose packed angular stones 0.1-0.2m	fill layer, or possibly stone packing (it is rather loose for a stone packing, but the location of the deposit makes it possible). A13 B2
s76	4066	stake hole, 0.04m dia, 0.07m deep	two stake holes on the north-western edge of the stone packing/quay foundation g457, possibly relating to a wooden superstructure. See also g509 &c. A64 B1
	4067	stake hole, 0.08 x 0.06m, 0.07m deep	
s77	4005	stake hole, 0.05m dia, 0.11m deep	group of stake holes forming the northern corner of a building oriented NW - SE, possibly at this stage the only building on the plot. s4029 does not lie near the others, but its stratigraphic relationship agrees with them, as does its position in relation to the levelling/floor layers g514. A19 B3
	4019	stake hole, 0.045m dia, 0.17m deep	
	4020	stake hole, 0.06 x 0.08m, 0.16m deep	
	4021	stake hole, 0.04m dia, 0.06m deep	
	4022	stake hole, 0.04m dia, 0.05m deep	
	4029	stake hole, 0.05 x 0.07m, 0.07m deep	
	4062	stake hole, 0.06m dia, 0.16m deep	
	4063	stake hole, 0.04m dia, 0.09m deep	
s78	4052	stake hole, 0.05m dia,0.04m deep	two stake holes on the edge of the large stone foundation g457, deriving from a wooden superstructure. A64 B1
	4058	stake hole, 0.05m dia, 0.03m deep	
s79	4036	stake hole, with charred stake, 0.04m dia, 0.1m deep	stake holes on the north-eastern edge of stone packing g457, deriving from a wooden superstructure or enclosure around the packing. A64 B1
	4037	stake hole, with charred stake, 0.05m dia, 0.14m deep	
s80	3916	stake hole, 0.06m dia, 0.05m deep	structural remains relating to a wooden jetty superstructure over the first of the two jetty foundations. The stratigraphic position is not entirely clear, as all the surrounding deposits are disturbed by periodic flooding. A21 B2
	4016	post hole, 0.12m dia, 0.4m deep, post probably pulled up	
	4017	post hole, 0.06 x 0.16m, 0.4m deep, for cleft post	
	4027	post hole, 0.17 x 0.24m, 0.64m deep, oak post and beam with tenon joint	
	4028	stake hole, 0.1m dia, 0.17m deep	
	4038	stake hole, 0.06m dia, 0.23m deep	
	4175	posthole, 0.3 x 0.37m , 0.73 deep	

881	3923	stake hole, 0.05m dia, 0.05m deep	western corner post for first building on this plot, construction level, with two stake holes which form part of the southern wall. The group is almost certainly contemporary with g359 in the Eastern Area. A19 B3
	3924	stake hole, 0.05m dia, 0.05m deep	
	3964	post hole, 0.14m dia, 0.48m deep	
882	3877	stake hole, 0.05m dia, 0.02m deep	three stake holes and a small post hole, probably forming a part of the western plot boundary for the workshop in this phase. A72 B3
	3934	stake hole, 0.08 x 0.06m, 0.06m deep	
	3937	stake hole, 0.08 x 0.06m, 0.05m deep	
	3948	post hole, 0.13 x 0.06m, 0.04m deep	
883	3890	stake hole, 0.08m dia, 0.2m deep	group of stake holes, forming a diffuse right angle corner in the southern wall line of the northern building. A75 B4
	3891	stake hole, 0.04m dia, 0.1m deep	
	3892	stake hole, 0.06m dia, 0.13m deep	
	3893	stake hole, 0.04m dia, 0.09m deep	
	3895	stake hole, 0.05m dia, 0.08m deep	
	3896	stake hole, 0.02m dia, 0.05m deep	
	3897	stake hole, 0.02m dia, 0.05m deep	
	3898	stake hole, 0.02m dia, 0.05m deep	
	3899	stake hole, 0.03m dia, 0.05m deep	
	3998	stake hole, 0.05m dia, 0.08m deep	
884	3869	post hole, 0.15 x 0.12m, 0.13m deep	three post holes forming an extension of the line of the southern wall of the southern building. A79 B4
	3871	post hole, 0.1m dia, 0.46m deep	
	3872	post hole, 0.2 x 0.13m, 0.09m deep	
885	3697	stake hole, 0.05m dia, 0.04m deep	a slightly diffuse and irregular line of stake holes forming the southern wall of the workshop associated with hearth g556 &c. A80 B4
	3729	stake hole, 0.03 x 0.04m, 0.09m deep	
	3730	stake hole, 0.05m dia, 0.08m deep	
	3731	stake hole, 0.04m dia, 0.04m deep	
	3732	stake hole, 0.055m dia, 0.12m deep	
	3733	stake hole, 0.04m dia, 0.11m deep	
	3734	stake hole, 0.06m dia, 0.12m deep	
	3735	stake hole, 0.03 x 0.02m, 0.11m deep	

886	3544	stake hole, 0.06m dia, 0.1m deep	a group of stakes with two post holes, forming the inner, north-eastern edge of a wall bench or other internal feature, in the southern building. A80 B4
	3545	stake hole, 0.05m dia, 0.03m deep	
	3564	stake hole, 0.03 x 0.02m, 0.06m deep	
	3565	stake hole, 0.06 x 0.03m, 0.06m deep	
	3566	plank hole, 0.14 x 0.05m, 0.07m deep	
	3567	stake hole, 0.02m dia, 0.04m deep	
	3575	stake hole, 0.03m dia, 0.05m deep	
	3576	stake hole, 0.03m dia, 0.03m deep	
	3577	stake hole, 0.03 x 0.05m, 0.02m deep	
	3578	stake hole, 0.08 x 0.05m, 0.05m deep	
	3579	stake hole, 0.04m dia, 0.06m deep	
	3585	small post hole, 0.19 x 0.09m, 0.09m deep	
	3699	post hole, 0.08 x 0.12m, in cut 0.15 x 0.2m, 0.26m deep.	
887	3993	clay, mixed with charcoal, fired clay, wood chips, bone.	a fill or floor layer in the western corner of the northern building. A66 B3
888	4065	brown silt, bone but no stones.	rubbish layers within the northern building on the plot, respecting and partially defining its southern wall line. A66 B3
	4071	brown clayey silt, on the modern water table.	
889	3610	black grey sandy silt with lenses of charcoal and ash.	fills in the boundary/drainage ditch to the west of the plot, dug in the wrong stratigraphic order, but essentially the same deposit. s3645 falls steeply, and spreads out over the surrounding surface of the yard at its lower end. A87 B5
	3632	black brown sandy silt very mixed with ash, charcoal and domestic rubbish.	
		black grey sandy silt with ash and charcoal.	
	3645	brown black silt, with charcoal and ash.	
	3742		
890	3557	stake hole, 0.05m dia, 0.13m deep	four stakes, on the line of the plot boundary, outwith the southern of the two buildings. A96 B5
	3558	stake hole, 0.06 x 0.03m, 0.09m deep	
	3559	stake hole, 0.035m dia, 0.095m deep	
	3560	stake hole, 0.03m dia, 0.06m deep	

891	3173	stake hole 0.06m dia, 0.1m deep.	an irregular row of eleven tiny stake holes, too small to excavate, spaced ca 0.04-0.05m apart, forming a flimsy fence or wind-break in the yard. The slightly larger stakes s3487, s3488 and s3490 probably provided support for the slighter structure, and the whole appears to have shielded s3538, which is probably a warming hearth or 'casting bowl' of the type previously found inside the workshops (see deposit series description for A66 for further discussion of the function of these structures). A87 B5
	3476	stake hole, ca 0.02m dia	
	3477	"	
	3478	"	
	3479	"	
	3480	"	
	3481	"	
	3482	"	
	3483	"	
	3484	"	
	3485	"	
	3486	"	
	3487	stake hole, ca. 0.05m dia	
	3488	"	
	3490	"	
	3538	shallow depression filled with fired clay and charcoal	
892	3463	stake hole, 0.03m dia, 0.04-0.08m deep	seven stake holes which lie on the inside of the north-western boundary ditch, forming a fence line which follows the ditch, then turns a corner into the yard. A87 B5
	3464	"	
	3465	"	
	3466	stake hole, 0.08-0.11m dia, 0.06-0.16m deep	
	3467	"	
	3468	"	
	3469	"	
893	3793	stake hole, 0.07m dia, 0.08m deep	group of two stake and one post hole in the northern building on the plot, deriving from ancillary structures to hearth g476. A69 B3
	3794	stake hole, 0.04m dia, 0.05m deep	
	3854	shallow post hole, 0.2m dia, 0.1m deep	
894	3493	large post hole, 0.41 x 0.5m, 0.24m deep	a group of structural elements, stratigraphically contemporary, which were found in the area on the western edge of the plot where a consistent shift in the nature of the contexts suggests that the plot boundary lies. A89 B5
	3507	stake hole, 0.06 x 0.1m, 0.06m deep.	
	3508	shallow post hole or post impression, 0.26 x 0.28, 0.05m deep.	
	3543	stake or small plank hole, 0.05 x 0.1m.	
	3546	stake or small plank hole, 0.04 x 0.1m.	
	3563	shallow cut containing ca 25 stones <0.2m dia.	
895	4033	stake hole, 0.08m dia, 0.07m deep.	two stake holes, respected by s4031 (g524) and probably forming a structural element in western wall of building A19, and its use and extension, A23. A19 B3
	4034	stake hole, 0.08m dia, 0.07m deep.	
896	3844	large, flat topped stone on the junction of the plot boundary and drainage ditch g889.	sill stones along the western plot boundary. A79 B4
	3870	scatters of stones on the plot boundary line.	

897	3774	fill layer in cut for post hole	post holes in the southern wall of the
		stone filled pit ca 1 x 0.5m, with	northern building. A75 B4
	3799	diffuse edges, post hole	
898	3562	compact pale yellow ash containing very burnt and shattered stone, and coarse sand	hearth, renovation of g565 &c. The structure of the hearth itself was almost totally destroyed by burning, all that remained being a sub-oval area 1.5 x 1m, of compact sandy ash and burnt stone. A83 B4
899	3619	grey white ash, packing around s3620	posts, in a wall line parallel with the boundary ditch g889. s3568 lies stratigraphically higher than the rest of the group, but no other grouping is applicable, and the whole of the ditch-side area, with its cuts and recuts, is slightly unclear. A84 B4
	3620	oval post hole, 0.09 deep, 0.18 x 0.1m area, filled with ash	
	3653	stake hole, 0.04m dia 0.08m deep	
	3654	stake hole, 0.05m dia, 0.04m deep	
	3568	stake hole, 0.08m dia, 0.05m deep	
900	3510	irregular cut <0.17m deep, with four large stones as fill	destruction of gable line posts, for construction g499. A87 B5
	3569	brown silty fill in post pipe, 0.2m dia, 0.3m deep	
	3574	brown silt in post pipe 0.25m dia, 0.3m deep	
901	3004	stake hole, 0.07m dia, 0.09m deep.	a row of stake holes forming a fence or wall line in the area of the northern wall of the southern building. A96 B5
	3005	stake hole, 0.06m dia, 0.06m deep.	
	3006	stake hole, 0.07m dia, 0.1m deep.	
	3007	stake hole, 0.05m dia, 0.05m deep.	
	3020	stake hole, 0.1m dia, 0.1m deep.	
	3022	stake hole, 0.06m dia, 0.06m deep.	
	3023	stake hole, 0.06m dia, 0.06m deep.	
	3040	stake hole, 0.07m dia, 0.15m deep.	
	3041	stake hole, 0.05m dia, 0.05m deep.	
	3042	stake hole, 0.05m dia, 0.06m deep.	
902	2475	stake hole, 0.1m dia, 0.17m deep	four stakes forming a fence or wall line within the southern building. A99 B6
	2789	stake hole, 0.02 x 0.04m, 0.08m deep	
	3190	stake hole, 0.05m dia, 0.09m deep	
	3190?	stake hole, 0.05m dia, 0.04m deep	

g903	2763	stake hole, 0.06m dia, 0.14m deep.	stake holes forming an irregular fence line relating to a plot boundary for a plot which lies almost entirely outwith the north-western side of the trench (see also g842). A94 B5
	2764	stake hole, 0.045m dia, 0.11m deep.	
	2967	stake hole, 0.05 x 0.04m, 0.06m deep.	
	2969	stake hole, 0.05 x 0.05m, 0.12m deep.	
	2971	stake hole, 0.04m dia, 0.11m deep.	
	2972	stake hole, 0.04 x 0.05m, 0.11m deep.	
	3056	small post hole, 0.11 x 0.15m, 0.07m deep.	
g904	2962	small post hole	stake holes and two small post holes forming a wall line for a building inside fence line g903. A94 B5
	2963	small post hole	
	2965	stake hole, 0.05m dia, 0.02m deep	
	2966	stake hole, 0.08m dia, 0.17m deep	
	3058	stake hole, 0.04m dia, 0.07m deep	
g905	3289	stake hole, 0.05-0.1m dia, 0.09m deep	a group of four stake holes together at the eastern end of the drainage ditch, probably marking the end wall of the workshop. A90 B5
	3291	stake hole, 0.05-0.1m dia, 0.06m deep	
	3292	stake hole, 0.05-0.1m dia, 0.06m deep	
	3293	stake hole, 0.05-0.1m dia, 0.02m deep	
g906	2507	cut, fill and post pipe for post, 0.23m dia, 0.17m deep, in cut 0.52 x 0.3m	structural elements in the southern wall line of a building on the northern part of the plot. A100 B6
	2682	base of post hole - oval, 0.2 x 0.4m	
g907	2504	post hole, 0.35m dia , 0.5m deep	stake and post holes in a workshop building or similar structure (Axxx) on the southern half of the plot. A99 B6
	2515	post hole	
	3047	stake hole, 0.07m dia, 0.14m deep	
g908	860	post hole, 0.3m dia	this group of structural elements consists of several slightly dubious post holes. They may have been post settings - their relatively clear edges come from layers built up around them, while the underlying deposits were pushed down in clear circular formations. The function of s876 is unclear - its small size makes it unlikely that this was a hearth, and the charred wooden remains were so slight that they could not be easily understood. Its stratigraphic and topographic position, however, suggests that it may also have been a structural element in this building. A113 B7
	864	probable post hole, 0.25m dia	
	865	probable post hole, 0.15m dia	
	866	probable post hole, 0.15m dia	
	876	charcoal layer containing the remains of a square wooden structure 0.4 x 0.4m	

g909	1774	stake hole	group of stake holes on the northern plot boundary, in the northern long wall of a building. A110 B7
	1775	"	
	1776	"	
	1777	"	
	1778	"	
	1779	"	
	1780	"	
	1781	"	
	1782	"	
	1783	"	
	1784	"	
	1785	"	
	1786	"	
	1787	"	
g910	1688	stake hole	a diffuse spread of stake holes on the northern plot boundary and onto the northern lane. There are no real visible structures, but as with g909, the position of these suggests that they were part of a fence line bounding the plot or components in the northern long wall of a building. A110 B7
	1689	"	
	1690	"	
	1693	"	
	1719	"	
	1720	"	
	1722	"	
	1723	"	
	1724	"	
	1725	"	
	1726	"	
	1727	"	
	1728	"	
	1746	"	
	1747	"	
	1749	"	
	1898	small post hole, 0.2m dia	
g911	979	stone filled post hole, 0.4m dia, 0.6m deep, for post 0.2m dia	four massive stone packed post holes forming a substantial wall line between the plot and the northern lane, and associated with four worn stones on the same line. The stones form the threshold for a door in this wall. The physical and stratigraphic association of s1032 with this group is so close that it clearly belongs to the same wall. A113 B7
	998	stone filled post hole, 0.32m dia, 0.5m deep	
	1005	stone filled post hole, 0.3m dia, 0.5m deep	
	1025	stone filled post hole, 0.76m dia, 0.82m deep, for post 0.3m dia	
	1032	small post hole 0.12m dia, 0.1m deep	
	1075	four worn stones, ca. 0.25 x 0.4 x 0.25m	
g912	696	stake hole, 0.1m dia	two major post holes and a stake hole in a NW - SE wall, and a row of stakes from an internal wall or other construction in a workshop. The stone packing s813 forms the foundation of the wall, into which the post holes are cut. A118 B8
	754	stone packing, in semi-circular cut ca 1m dia	
	767	stake hole 0.08m dia	
	777	stone packing in an irregular cut ca 0.6 x 0.35m, containing an adze and a knife	
	785	stone packing in vague cut 0.6m dia	
		stake hole 0.08m dia	
	801	stake hole, 0.07m dia	
	802	stake hole, 0.05m dia	
	806	stake hole, 0.04m dia	
	808	stone packing in a shallow cut, 0.3 x 1 x 0.25m	
	813		

9 13	632 655 685 746	post hole, 0.4m dia post hole, stone filled 0.22-0.34m dia, 0.25m deep post hole, 0.24m dia, 0.12m deep post hole, 0.35m dia	four post holes in a north-south row, one for an outer wall on the northern plot boundary, two probably internal for aisle posts, and the fourth for the southern wall. A122 B8
9 14	1714 1715 1716 1717	stake hole, 0.05m dia stake hole, 0.06m dia small post hole, 0.15m dia stake hole, 0.08m dia	group of stake holes, with a small post hole, on the line of the northern wall of the workshop. A113 B7
9 15	974 984	stone filled post hole, 0.32m dia, 0.26m deep small post hole, 0.12m dia, 0.18m deep	two post holes in the northern lane, probably functioning as foundation for wooden surfacing in the lane. A122 B8
9 16	743 800 820 870	description missing brown black sandy silt with large bones and stone dark brown sandy silt with large bones and burnt stone redeposited ash, with grey brown sandy silt	domestic rubbish deposits inside a building, on the northern part of the plot. A116 B7
9 17	752 782 874 952 1027	amorphous post hole or stone packing post hole, with stone packing, 0.2m dia, 0.15m deep post hole, 0.25m dia post setting, 0.4m dia packed with small stones post hole, 0.5m dia	five post holes in similar stratigraphic postitions although widely seperate topographically, which appear to define the extent of a building on the northern part of the plot. A116 B7
9 18	641 663 787=788 789 793	black sandy silt, with much charcoal dark brown sandy silt with ash and charcoal hearth, built of laminated clay, with a little burnt stone (<0.1m dia), irregular oval form, with a large, heat-cracked stone at the western end, which probably formed a rest for bellows. hard clay layer, associated with s788, but relatively unburnt pea gravel overlying s789, may be water-sorted	a hearth, slightly irregular in form and construction, and showing evidence of exposure to extreme heat. The large stone at the western end has been cracked by fire, but is otherwise in situ. The remainder of the hearth was probably initially built of 0.1m stones packed in clay, as is usual, but only the slight and fragmentary remains of burnt stones provide evidence for this. s789 and s793, which are in the immediate vicinity of the hearth, may be a part of the same structure which escaped the heat. The water-sorting caused by rainfall through a smoke hole in the roof, slightly to one side of the fire. See also groups 797, 801, 803, 804, which are earlier versions of the same hearth in the southern building. A121 B8

919	755	stake hole	these stake and post holes are in the
	861	stake hole	southern wall line of a workshop
	933	stake hole	building (A105), and are
	934	stake hole	contemporary with g809. s755 is the
	985	stake hole	upper level of s1009. The group
	994	stake hole	forms a NW - SE line, with a right
	1009	stake hole	angle join forming an internal
	1039	stake hole	dividing wall in the building. Stake
	1617=2516	post hole c. 0.2m dia.	holes s2389-91 would probably have
	2389	stake hole, 0.05m dia, 0.02m deep, wood fragments	fragments in their fills. They are parallel to the main line of the wall,
	2390	stake hole, 0.05m dia, 0.02m deep, wood fragments	and are grouped with the remainder on the basis of their similar
	2391	stake hole, 0.05m dia, 0.02m deep, wood fragments.	stratigraphic position, and their similar relationship to deposits within building A105. See the description of A105 for further discussion of this problem. A105 B7

920 onwards - Eastern Area

N. AREA

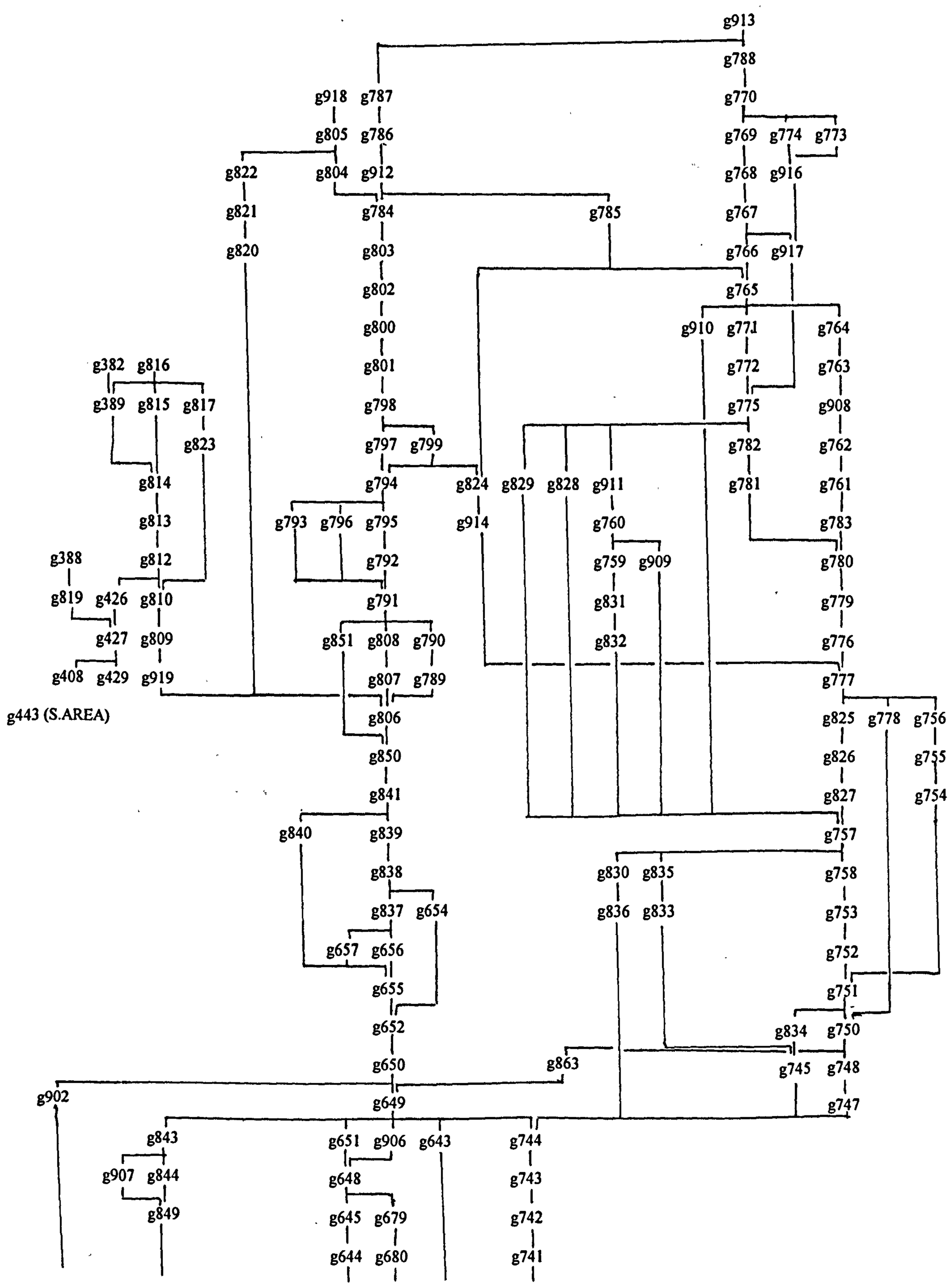
g913
g788
g770
g918
g787
g805
g786
g769
g774
g773
g822
g804
g912
g768
g916
g821
g784
g785
g767
g820
g803
g766
g917
g802
g765
g800
g910
g771
g764
g382
g816
g801
g772
g763
g389
g815
g817
g798
g775
g908
g823
g797
g799
g782
g762
g814
g794
g824
g829
g828
g911
g781
g761
g813
g793
g796
g795
g914
g760
g783
g388
g812
g792
g759
g909
g780
g819
g426
g810
g791
g831
g779
g427
g809
g851
g808
g790
g832
g776
g408
g429
g919
g807
g789
g777
g443 (S.AREA)
g806
g825
g778
g756
g850
g826
g755
g841
g827
g754
g840
g839
g757
g838
g830
g835
g758
g837
g654
g836
g833
g753
g657
g656
g752
g655
g751
g652
g834
g750
g650
g863
g745
g748
g902
g649
g747
g843
g651
g906
g643
g744
g907
g844
g648
g743
g849
g645
g679
g742
g644
g680
g741

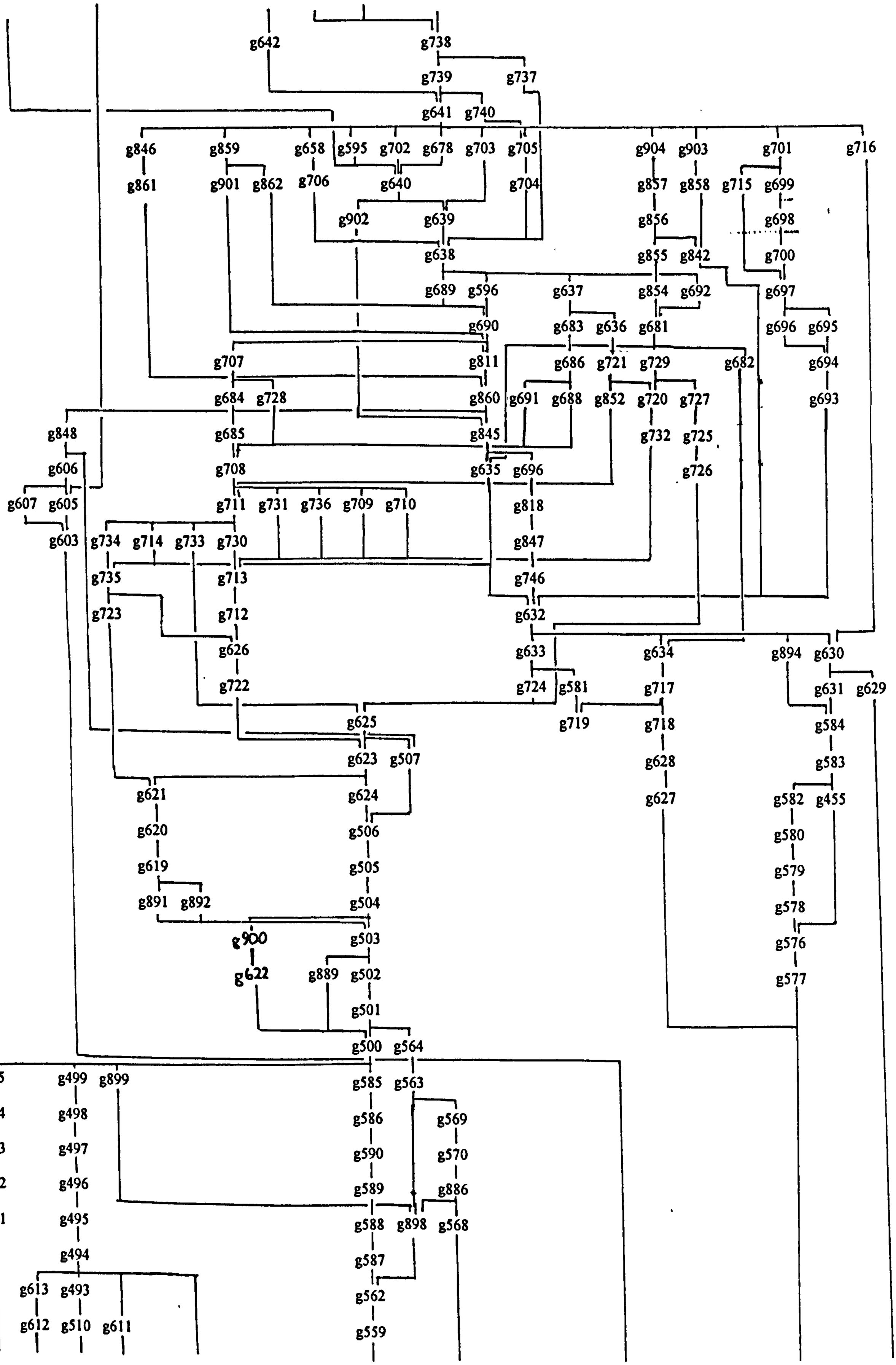
g642
g738
g739
g737
g641
g740
g846
g859
g658
g595
g702
g678
g703
g705
g904
g903
g701
g716
g861
g901
g862
g706
g640
g704
g857
g858
g715
g699
g902
g639
g856
g698
g638
g855
g842
g700
g689
g596
g637
g854
g692
g697
g690
g683
g636
g681
g696
g695
g707
g811
g686
g721
g729
g682
g694
g684
g728
g860
g691
g688
g852
g720
g727
g693
g848
g685
g845
g732
g725
g606
g708
g635
g696
g726
g607
g605
g711
g731
g736
g709
g710
g818
g603
g734
g714
g733
g730
g847
g735
g713
g746
g723
g712
g632
g626
g633
g634
g894
g630
g722
g724
g581
g717
g631
g629
g625
g719
g718
g584
g623
g507
g628
g583
g621
g624
g627
g582
g455
g620
g506
g580
g619
g505
g579
g891
g892
g504
g578
g900
g503
g576
g622
g889
g502
g577
g501
g500
g564
g615
g499
g899
g585
g563
g594
g498
g586
g569
g593
g497
g590
g570
g592
g496
g589
g886
g591
g495
g588
g898
g568
g494
g587
g613
g493
g562
g612
g510
g611
g559

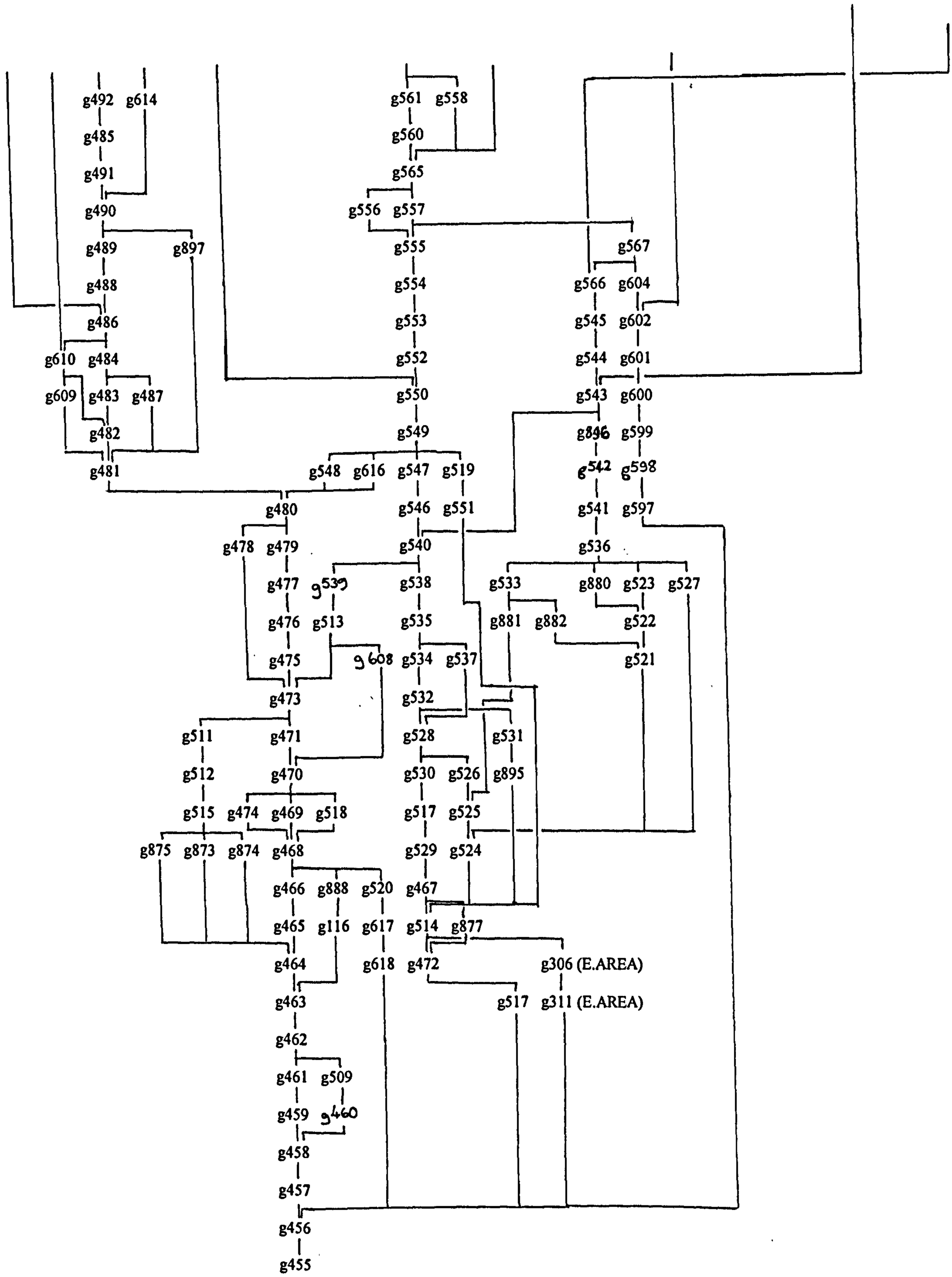
g492
g614
g485
g491
g490
g489
g897
g488
g486
g610
g484
g609
g483
g487
g482
g481
g561
g558
g560
g565
g556
g557
g555
g554
g553
g552
g550
g549
g548
g616
g547
g519
g546
g551
g540
g538
g539
g535
g534
g537
g532
g528
g531
g530
g526
g895
g517
g525
g529
g524
g567
g566
g604
g545
g602
g544
g601
g543
g600
g896
g599
g542
g598
g541
g597
g536
g533
g880
g523
g527
g881
g882
g522
g521
g478
g479
g477
g476
g513
g475
g608
g473
g511
g471
g512
g470
g515
g474
g469
g518
g875
g873
g874
g468
g466
g888
g520
g467
g465
g116
g617
g514
g877
g464
g618
g472
g306 (E.AREA)
g463
g517
g311 (E.AREA)
g462
g461
g509
g459
g460
g458
g457
g456
g455

E. AREA

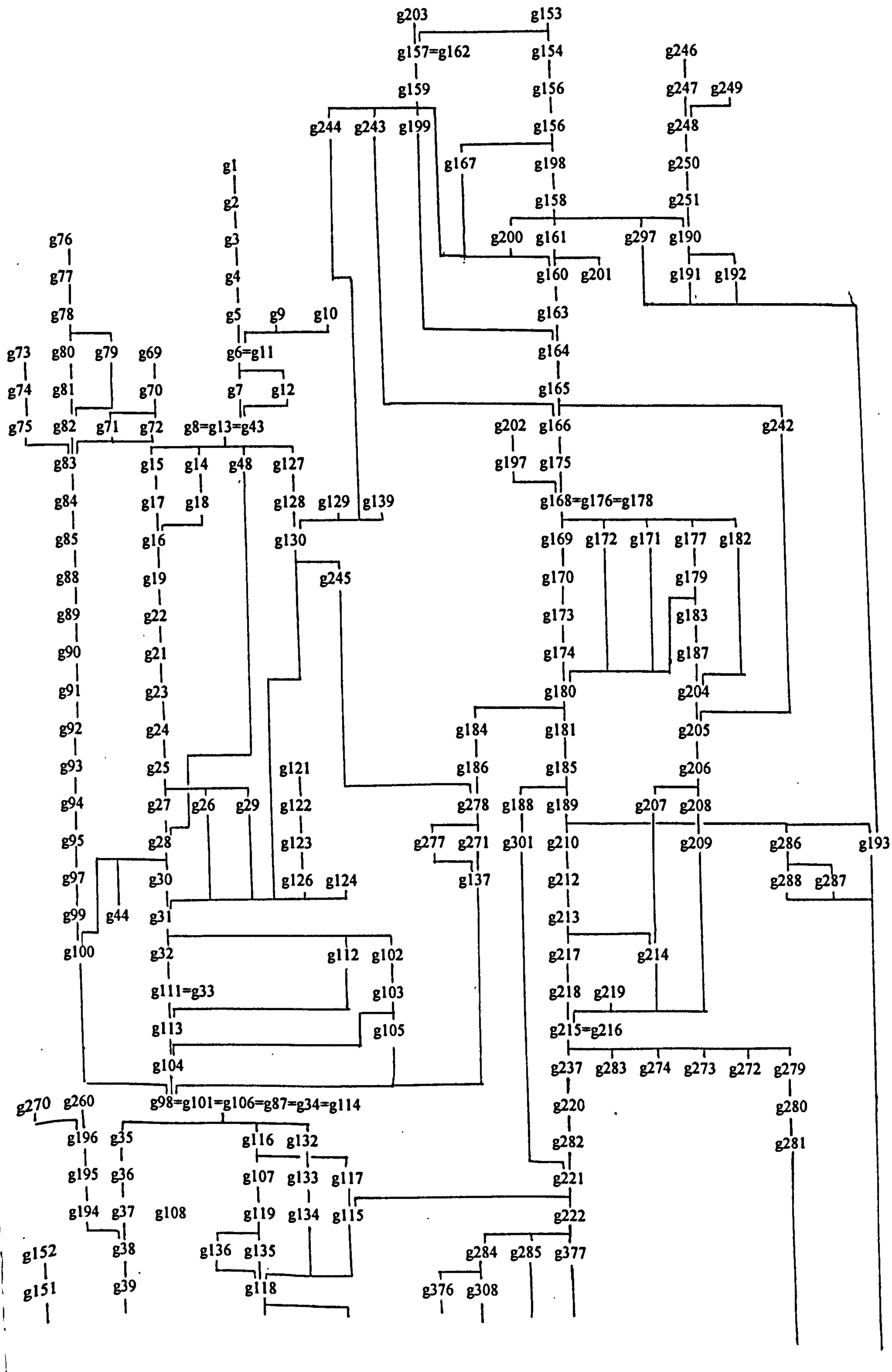
g203
g153
g157=g162
g154
g246
g159
g156
g247
g249
g244
g243
g199
g156
g248
g167
g198
g250
g1
g158
g251
g2
g200
g161
g297
g190
g76
g3
g160
g201
g191
g192
g77
g4
g163
g78
g5
g9
g10
g164
g73
g80
g79
g69
g6=g11
g165
g74
g81
g70
g7
g12
g202
g166
g242
g75
g82
g71
g72
g8=g13=g43
g197
g175
g83
g15
g14
g48
g127
g168=g176=g178
g84
g17
g18
g128
g129
g139
g169
g172
g171
g177
g182
g85
g16
g130
g170
g179
g88
g19
g245
g173
g183
g89
g22
g174
g187
g90
g21
g180
g204
g91
g23
g184
g181
g205
g92
g24
g186
g185
g206
g93
g25
g121
g278
g188
g189
g207
g208
g94
g27
g26
g29
g122
g277
g271
g301
g210
g209
g286
g193
g95
g28
g123
g137
g212
g288
g287
g97
g30
g126
g124
g213
g99
g44
g31
g217
g214
g100
g32
g112
g102
g218
g219
g111=g33
g103
g215=g216
g113
g105
g237
g283
g274
g273
g272
g279
g104
g220
g280
g270
g260
g98=g101=g106=g87=g34=g114
g282
g281
g196
g35
g116
g132
g221
g195
g36
g107
g133
g117
g222
g194
g37
g108
g119
g134
g115
g284
g285
g377
g152
g38
g136
g135
g376
g308
g151
g39
g118

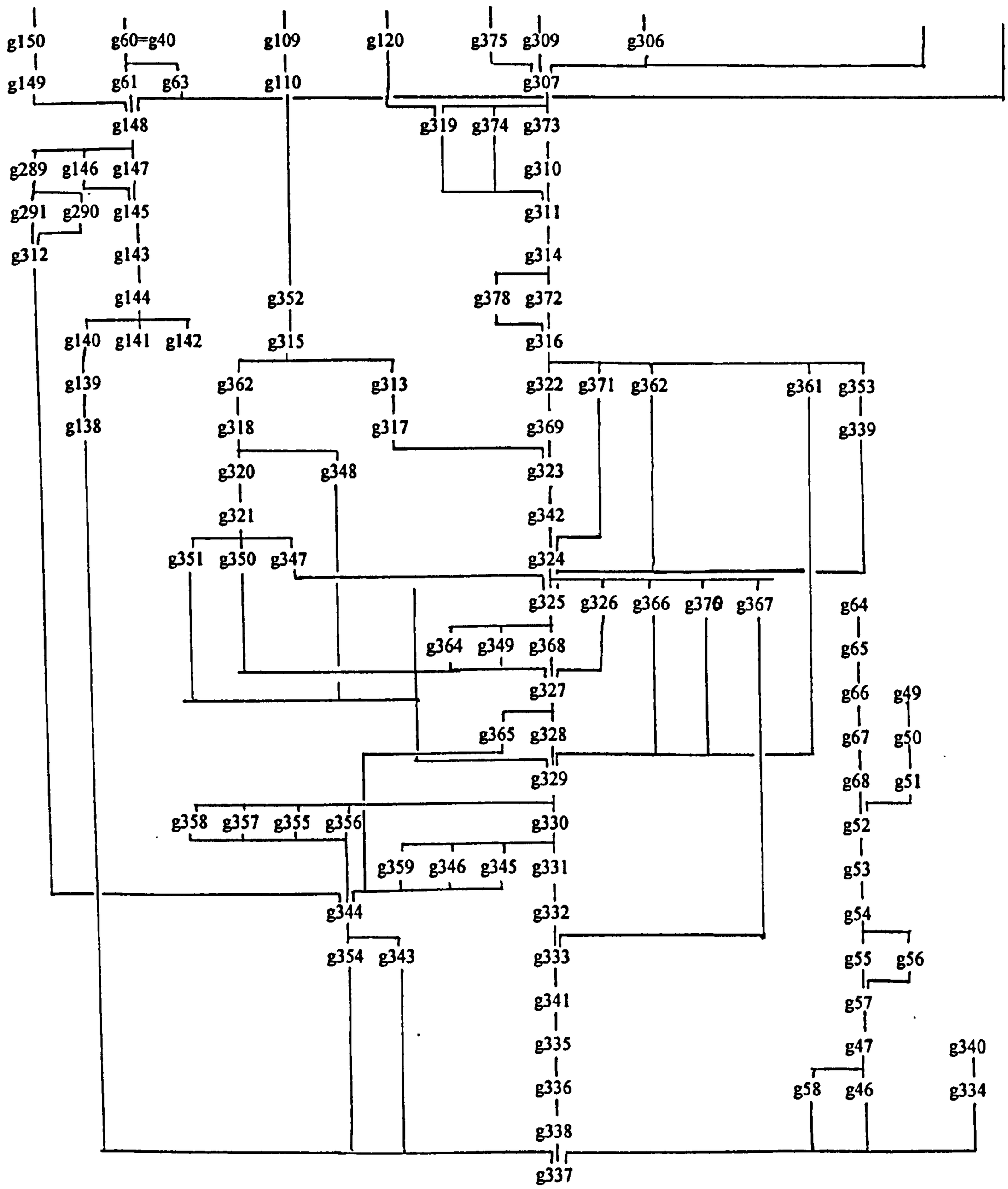
g150
g60=g40
g109
g120
g375
g309
g306
g149
g61
g63
g110
g307
g148
g319
g374
g373
g289
g146
g147
g310
g291
g290
g145
g311
g312
g143
g314
g144
g352
g378
g372
g140
g141
g142
g315
g316
g139
g362
g313
g322
g371
g362
g361
g353
g138
g318
g317
g369
g339
g320
g348
g323
g321
g342
g351
g350
g347
g324
g325
g326
g366
g370
g367
g64
g364
g349
g368
g65
g327
g66
g49
g365
g328
g67
g50
g329
g68
g51
g358
g357
g355
g356
g330
g52
g359
g346
g345
g331
g53
g344
g332
g54
g354
g343
g333
g55
g56
g341
g57
g335
g47
g340
g336
g58
g46
g334
g338
g337

S. AREA

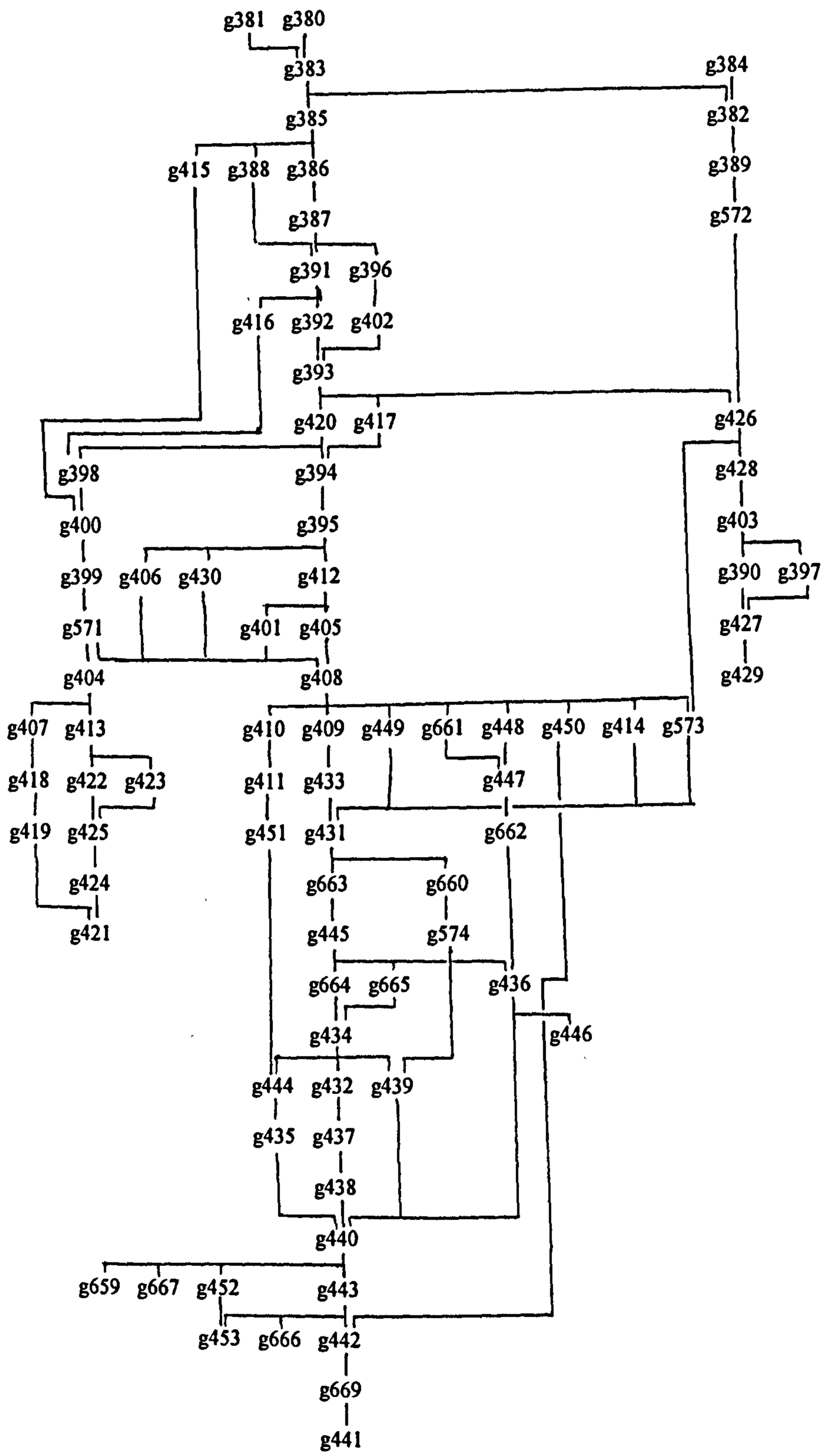
g381
g380
g383
g384
g385
g382
g415
g388
g386
g389
g387
g572
g391
g396
g416
g392
g402
g393
g420
g417
g426
g398
g394
g428
g400
g395
g403
g399
g406
g430
g412
g390
g397
g571
g401
g405
g427
g404
g408
g429
g407
g413
g410
g409
g449
g661
g448
g450
g414
g573
g418
g422
g423
g411
g433
g447
g419
g425
g451
g431
g662
g424
g663
g660
g421
g445
g574
g664
g665
g436
g434
g446
g444
g432
g439
g435
g437
g438
g440
g659
g667
g452
g443
g453
g666
g442
g669
g441

APPENDIX SIX:

All the radiocarbon dates in the following appendix are quoted, unless otherwise specified, at one standard deviation (σ). Uncalibrated dates are quoted as 'bp', calibrated dates as 'BC' or 'AD'.

The first column for each case gives the description of the source of the sample. The second gives its processing code. The third contains the uncalibrated range as quoted in the relevant text. The fourth gives the calibrated range, as quoted in the relevant text.

All dates are quoted as in the original text. Variations in presentation derive from the variations in presentation in the original texts. It is often the case that source, number of standard deviations, and whether and how the sample was calibrated are not specified in the original site reports.

BIRKA

A series of seven radiocarbon dates were taken on an oak sample from s1218, A6, B1. The dating samples each included c.10 year rings, from a timber with a total of 59 year rings. Sample A was taken from the sapwood, and sample F from the heart, of the timber. Whilst a degree of stratigraphic ambiguity attended the context, it is difficult to assign it to a period any later than B2, and B1 is more probable, given its structural relationships. Further samples will have to be tested. The following dates have yet to be calibrated.

The analysis was carried out by the Department of Quaternary Geology, University of Lund, in April, 1998.

A		1147+/-36 bp	

B		1188+/-40 bp	
B/C		1154+/-55 bp	
C		1209+/-40 bp	
D		1216+/-40 bp	
E		1303+/-30 bp	
F		1230+/-30 bp	

HELGÖ

From Kyhlberg 1982, 31-35

Building group 1, post hole 4, charcoal	St-5112	1210+/-105 bp	AD 752+/-116
Building group 1, post hole 8, charcoal	St 5113	1270+/-95 bp	AD 706+/-107
Building group 1, hearth 151, charcoal	St 5114	1195 +/-100 bp	AD 765+/-112
Building group 1 hearth 155, H5, charcoal	St 5538	1585+/-90 bp	AD 402 +/-103
Building group 1, hearth 153, H3, charcoal	St 5539	2455+/-105 bp	505 BC +/- 116
Building group 1, hearth 152, H2, charcoal	St 5540	1675+/-90 bp	AD 312+/-103
Building group 1, sunken hut 15, feature 87, charcoal	St 5962	1240+/-90 bp	AD 728+/-103
Building group 1, pit 113-115, feature 104, charcoal	St 5963	760+/-90 bp	AD 1248+/-103
Building group 1, pit 103, feature 83c, charcoal	St 5964	1410+/-90 bp	AD 583+/-103
Building group 1, pit 123, feature 102, charcoal	St 5965	1315+/-90 bp	AD 671+/-103
Building group 1, sunken hut 104, charcoal	St 5966	1365+/-90 bp	AD 626+/-103

Building group 1 hearth 159, feature 26, charcoal	St 5967	1285+/-90 bp	AD 626+/-103
Building group 1, hearth 151, feature 17a, charcoal	St 5968	1255+/-90 bp	AD 716+/-103
Building group 2, Foundation II, hearth 201, charcoal	St 1120	1645+/-75 bp	AD 349+/-90
Building group 2, post hole 79, charcoal	St 1121	1505+/-85 bp	AD 466+/-99
Building group 2, pit 76, charcoal	St 1122	1705+/-70 bp	AD 276+/-86
Building group 2, foundation trench, J32, charcoal	St 1123	1325+/-70 bp	AD 662+/-86
Building group 2, pit 196, charcoal	St 1124	1770+/-65 bp	AD 233+/-82
Building group 2, post hole 314, charcoal	St 1125	1805+/-70 bp	AD 212+/- 86
Building group 2, pit 292, charcoal	St 1126	1065+/-85 bp	AD 929+/-99
Building group 2, foundation IV, layer 5-6, V122, charcoal	St 1127	1750+/-70 bp	AD 245+/-86
Building group 2, foundation IV, layer 5-6, AC 123-124, charcoal	St 1128	1770+/-70 bp	AD 233+/-86
Building group 2, foundation IV, layer 5-6, AD 120, charcoal	St 1129	1615+/-80 bp	AD 376+/-94
Building group 2, foundation IV, layer 5-6, AC 125, resin	St 1130	1730+/-85 bp	AD 259+/-94
Building group 2, foundation IV, layer 3-6, V126, resin	St 1131	1715+/-80 bp	AD 269+/-94
Building group 2, foundation IV, layer 5-6, X 123-124, resin	St 1132	1835+/-70 bp	AD 194+/-86

Building group 2, foundation IV, layer 5-6, resin	St 1133	1780+/-80 bp	AD227+/-94
Building group 2, foundation IV, layer 5-6, X 124-125, resin	St 1134	1760+/-80 bp	AD 239+/-94
Building group 2, foundation IV, layer 6, V 124, bread	St 1135	1730+/-75 bp	AD 259+/-90
Building group 2, foundation IV, layer 6, V 121, bread	St 1136	1770+/-75 bp	AD 233+/-90
Building group 2, foundation IV, layer 4, T 128, birch bark	St 1137	1815+/-85 bp	AD 206+/-99
Building group 2, foundation IV, layer 5, TU 126, birch bark	St 1138	1655+/-80 bp	AD 338+/-94
Building group 2, foundation VIII, G 70-71,charcoal	St 2301	1210+/-140 bp	AD 752+/-149
Building group 2, foundation VIII, pit BC-BB 71-72, charcoal	St 2302	1470+/-100 bp	AD 509+/-112
Building group 2, foundation VIII, hearth BA 68, charcoal	St 2303	1485+/-100 bp	AD 489+/-112
Building group 2, foundation VIII, FG 76, charcoal	St 2315	2120+/-100 bp	178 BC +/- 112
Building group 2 foundation VIII, D76, charcoal	St 2316	1995+/-100 bp	AD 6+/-112
Building group 2, foundation IV, layer 5, R 123, bone	St 2526	1760+/-100 bp	AD 239+/-112
Building group 2, foundation IV, layer 5, S 121, bone	St 2531	1705+/-120 bp	AD 276+/-130
Building group 2, foundation IV, layer	St 2537	1675+/-100 bp	AD 312+/-112

6, R 122, bone			
Building group 2, foundation IV, layer 3-5, V 124	St 2669	1505+/-100 bp	AD 466+/-112
Building group 2, foundation IV, layer 2, S 120, bone	St 2670	1645+/-100 bp	AD 349+/-112
Building group 2, foundation IV, layer 3, S 120, bone	St 2673	1575+/-100 bp	AD 410+/-112
Building group 2, foundation IV, layer 3, R 122, bone	St 2676	1615+/-100 bp	AD 376+/-112
Building group 2, foundation IV, layer 6, R 121, bone	St 2678	1080+/-100 bp	AD 908+/-112
Building group 2, foundation IV, layer 1, S 120-121, bone	St 2686	1450+/-145 bp	AD 535+/-153
Building group 2, foundation IV, layer 4, S 121, bone	St 2689	1655+/-100 bp	AD 338+/-112
Building group 2, foundation IV, layer 4, R 122, bone	St 2690	1655+/-100 bp	AD 338+/-112
Building group 2, foundation IV, layer 5, R 122, bone	St 2691	1760+/-100 bp	AD 239+/-112
Building group 2, foundation IV, layer 5, TU 126, bone	St 2692	1845+/-100 bp	AD 188+/-112
Building group 2, foundation IV, layer 1, R 119-121, bone	St 2694	1345+/-130 bp	AD 644+/-139
Building group 3, opI, x518 y301, charcoal	St 2291	1565+/-100 bp	AD 418+/-112
Building group 3, hearth 301, x514 y315, charcoal	St 3723	1470+/-100 bp	AD 509+/-112
Building group 3, hearth 1, x502 y320, charcoal	St 3724	1535+/-100 bp	AD 442+/-112
Building group 3, pit 2, x502 y302,	St 3725	1495+/-100 bp	AD 476+/-112

charcoal			
Building group 3, pit 281, x513 y310, charcoal	St 3726	1685+/-100 bp	AD 299+/-112
Building group 3, pit 279, x513 y309, charcoal	St 3727	1555+/-100 bp	AD 426+/-112
Building group 3, pit 282, x512 y311, charcoal	St 3728	1390+/-100 bp	AD 604+/-112
Building group 3, pit 289, x513 y312, charcoal	St 3729	1560+/-100 bp	AD 422+/-112
Building group 3, hearth 10, x502 y307, charcoal	St 3730	1315+/-100 bp	AD 671+/-112
Building group 3, post hole 212, x517 y299, charcoal	St 3731	1655+/-100 bp	AD 338+/-112
Building group 3, hearth 314, x512 y323, charcoal	St 3732	1690+/-100 bp	AD 293+/-112
Building group 3, hearth 315, x512 y324, charcoal	St 3733	1305+/-100 bp	AD 680+/-112
Building group 3, hearth 7, x499 y307, charcoal	St 3900	1500+/-100 bp	AD 470+/-112
Building group 3 x511-13 y316-20, charcoal	St 3901	1580+/-100 bp	AD 406+/-112
Building group 3, foundation trench 194, x512-14 y290-94, charcoal	St 3902	1400+/-110 bp	AD 595+/-121
Building group 3, x517-18 y293, charcoal	St 3956	1250+/-210 bp	AD 720+/-216
Building group 3, hearth 225, x512-14, y290-94, charcoal	St 3957	1150+/-110 bp	AD 815+/-121
Building group 3, x517 y313, charcoal	St 3958	1530+/-115 bp	AD 446+/-125
Building group 3, hearth 263, x515-16	St 3959	1510+/-110 bp	AD 462+/-121

y306, charcoal			
Building group 3, hearth 245, x505 y295, charcoal	St3960	1905+/-110 bp	AD 114+/-121
Building group 3, hearth 1, x502 y320, charcoal	St 6466	1430+/-95 bp	AD 559+/-107
Building group 3, hearth 10, x502 y307, charcoal	St 6467	1390+/-100 bp	AD 604+/-112
Building group 3, hearth 113, x502 y350, charcoal	St 6468	1530+/-95 bp	AD 446+/-107
Building group 3, hearth 109, x497 y346, charcoal	St 6469	1360+/-95 bp	AD 631+/-107
Building group 3, hearth 153, x501 y355, charcoal	St 6470	1535+/-95 bp	AD 442+/-107
Building group 3, hearth 172, charcoal	St 6471	1583+/-115 bp	AD 299+/-125
Building group 3, feature 101, charcoal	St 6865	1545+/-95 bp	AD 434+/-107
Building group 3, feature 164, charcoal	St 6866	1730+/-95 bp	AD 259+/-107
Building group 3, feature 180, charcoal	St 6867	1550+/-95 bp	AD 430+/-107
Building group 3, feature 54, charcoal	St 6868	1265+/-95 bp	AD 709+/-107
Building group 3, feature 39, charcoal	St 6869	1365+/-95 bp	AD 626+/-107
Building group 3, feature 177, charcoal	St 6870	1775+/-95 bp	AD 230+/-107
Building group 4, x096 y710, wood	St 2274	1250+/-100 bp	AD 720+/-112
Building group 4, x096 y695, charcoal	St 2275	1585+/-100 bp	AD 402+/-112
Building group 4, x101 y707, charcoal	St 2312	1090+/-120 bp	AD 894+/-130
Building group 4, x099 y713, charcoal	St 2313	1325+/-100 bp	AD 662+/-112

Building group 4, post hole 71, wood	St 4546	1500+/-100 bp	AD 470+/-112
Building group 4, post hole 74, wood	St 4647	1430+/-100 bp	AD 559+/-112
Building group 4, hearth 81, charcoal	St 5532	1455+/-100 bp	AD 528+/-112
Building group 4, hearth 55, charcoal	St 5533	1720+/-100 bp	AD 266+/-112
Building group 4, hearth 34, charcoal	St 5534	1510+/-100 bp	AD 462+/-112
Building group 4, hearth 58, charcoal	St 5535	1345+/-100 bp	AD 644+/-112
Building group 4, sunken hut/oven, charcoal	St 5536	1425+/-100 bp	AD 565+/-112
Building group 4, hearth 5, charcoal	St 5537	1555+/-100 bp	AD 426+/-112
Building group 5, Vastgarden, Bona 3, charcoal	St 2300	1345+/-90 bp	AD 644+/-112
Building group 5, Vastgarden, Bona 3, charcoal	St 4282	1535+/-90 bp	AD 442+/-103
Building group 9, pit 62, charcoal	St 5115	1550+/-100 bp	AD 430+/-112
Building group 6, pit 66, charcoal	St 5116	1755+/-100 bp	AD 242+/-112
Building group 6, pit 67, charcoal	St 5117	1450+/-85 bp	AD 535+/-99
Building group 6, sunken hut 60, floor, charcoal	St 5118	1485+/-90 bp	AD 489+/-103
Building group 6, sunken hut 60, oven, charcoal	St 5119	1210+/-160 bp	AD 752+/-168
Cemetery 116, feature 68, charcoal	St 5120	1175+/-95 bp	AD 787+/-107
Cemetery 116, feature 25, charcoal	St 6462	1705+/-100 bp	AD 276+/-112
Cemetery 116, feature 29, charcoal	St 6463	1165+/-100 bp	AD 798+/-112
Cemetery 116, feature 34, charcoal	St 6464	1420+/-95 bp	AD 571+/-107
Cemetery 116, feature 31, charcoal	St 6465	1165+/-95 bp	AD 798+/-107

Cemetery (150)119, feature 43, resin	St 1315	1665+/-70 bp	AD 325+/-86
Cemetery (150)119, feature 46, resin	St 1316	1645+/-75 bp	AD 349+/-90

KAUPANG

These dates were calibrated only in 1990. The uncalibrated dates are therefore those published and discussed in articles and reports prior to that date. The dates are quoted as in Karine Hougen 1993, 65. The descriptions of the sources of the various samples have been taken from Karine Hougen 1993, 49, but, where no description is given (the majority of the samples below), this is because no specific source attribution appears to have been published. The relevant text reads:

> *'Det er foretatt 8 ikke kalibrerted 14C dateringer av materialet fra bosetningsområdet. Bortsett fra to påler, som ble funnet utenfor vikingtidens strandlinje I 1958 og datert til 840+/-90 år e.Kr., er alla eldre enn de arkeologiske dateringene. Den eldste prøven, trekull fra Hus I, er datert til 350+/-100 år, de yngste til 600+/-100 e.Kr. Disse prøvene er tatt fra trekull I ildsted, trerester fra Hus I, Hus VI og Brønn IV. Den siste med sekundært anvendt trevirke.' (op. cit. 49).*[1]

Pole in harbour defences	DF 36. T-132	830+/-90 ad	790-1010 AD
	DF 75. T-250	600+/-80 ad	603-760 AD
	DF 75. T-252	450+/-100 ad	430-650 AD
	DF 75. T-253	550+/-100 ad	560-680 AD
Charcoal from house I	DF 75. T-254	350+/-100 ad	340-560 AD
	DF 75. T-255	600+/-100 ad	610-770 AD

[1] 'There are eight uncalibrated C14 samples of material from the settlement area. With the exception of two poles, which were found outwith the Viking shoreline in 1958, and dated to ad 840+/-90, all are older than the archaeological datings. The eldest sample, charcoal from House I, is dated to ad 350+/-100, the youngest to ad 600+/-100. These samples are taken from charcoal in fireplaces, wood from House I, House VI and Well IV. The last with secondarily used timber' (Karine Hougen 1993, 49).

LÖDDEKÖPINGE

All the following radiocarbon dates derive from animal bone found in the fill of sunken-featured buildings. The lack of stratigraphic information about the samples is unfortunate, as is the lack of information about their calibration. Indeed, they may not have been calibrated. The final values are quoted as in Ohlsson 1976, 97, where the calibrated figure quoted is presumably either the mean or median value

Structure 1, Field A collagen from animal bone	Lu 684	1170+/-50 bp	AD 780
Structure 1, Field A collagen and dentine	Lu 685	1220+/-50 bp	AD 730
Structure 8, Field B collagen from animal bone	Lu 686	1130+/-85 bp	AD 820
Structure 13, Field B, collagen	Lu 687	1120+/-50 bp	AD 830
Structure 11, Field G collagen	Lu 688	1120+/-59 bp	AD830
Structure 10, Field K, collagen and dentine	Lu 689	1130+/-50 bp	AD 820

LONDON

From Jubilee Hall (Cowie et. al 1988, 56).

Human bone	HAR-8936	1370+/-60 bp	AD 630-675

NORWICH

Two relevant radiocarbon dates are published from Norwich, deriving from peat underlying the consolidation of the shoreline excavated in Fishergate (Ayers 1994, 36), and from the first recut of a ditch, presumed to be a defensive enceinte (Atkin 1985, 240)

Top layer of peat, underlying context 168	HAR 7061	1150+/-80 bp	AD 780-980
Ditch recut	HAR 2701	1090+/-60 bp	AD 890+/-60

NORTHAMPTON

St Peter's Church

From Williams 1979, 140

These dates are cited with no indication as to whether they are calibrated. All are quoted to one standard deviation.

Mortar mixer associated with church construction	-	ad 670+/-95	-
"	-	ad 680+/-65	-
"	-	ad 900+/-70	-
"	-	ad 740+/-85	-

Chalk Lane

From Williams 1981, 94-95; *op. cit.* 25

Oak post from sunken featured building	-	ad 660+/-75	-
Animal bone from	-	ad 470+/-90	-

sunken featured building			
Animal bone from sunken featured building	-	ad 525+/-75	-
Charcoal from silting up of ditch	-	ad 870+/-85	-
"	-	ad 940+/-85	-

PAVIKEN

From Lundström 1981, 23

Animal bone	-	-	AD 995+/-80

This radiocarbon date is given in the publication without any indication of whether or not it is calibrated, or how. It is therefore difficult to evaluate.

YORK

The Minster

From Carver 1995, 189; Phillips & Haywood 1995, 134-135

Animal bone from basilica (juvenile pig)	-	1664+/-14 bp	AD 343-416
Charcoal from hearth in building 2Z	-	1109+/-47 bp	AD 809-1013

Trench 4, Lloyds Bank, Pavement

From Oakey 1991, 195

Plant debris, layer 24, structure IV/7	BIRM-403	-	AD 880-1030
Layer 6, structure IV/10	BIRM-402	-	AD 970-1160
Middle or upper part of sequence	BIRM-401	-	AD 890-1115

58-9 Skeldergate

From Donaghey 1986, 45

Beam in structure D	HAR-1728	960+/-70 bp	-
Charcoal from oak and willow in layer 2040	HAR-1412	1230+/-80 bp	-

HEDEBY

South Settlement

From Steuer 1974, 53

House 26	Hv 2598	1415+/-65 bp	AD 490-640
House 27	Hv 2599	1085+/-65 bp	AD 900-1020

VISBY

Six radiocarbon dates from the Viking Age settlement of Visby are quoted by Westholm (1985, 297) (see also Appendix F). These derive from wood samples taken in 'three separate parts of the settlement area, as well as from the former harbour basin' (*ibid.*). They are stated as: AD 660, 665, 960, 980, 980, 995. No indication is given of species, whether or not these are calibrated dates, or of their standard deviations. They can therefore not be relied on in any way.

BIBLIOGRAPHY

Primary Sources

Adam of Bremen *History of the Archbishops of Hamburg-Bremen*, trans. F. J. Tschan 1959 New York
Historien om Hamburgstiftet och dess biskopar, trans. E. Svenberg 1984 Stockholm

The Anglo-Saxon Chronicle, trans. G. N. Garmonsway 1953 London
The Anglo-Saxon Chronicle, trans. and ed. M. Swanton 1996 London

Bede *Historia Ecclesiastica Gentis Anglorum*, trans. B. Colgrave & R. A. B. Mynors 1969 Oxford

Eyrbyggjasaga, trans. H. Pálsson & P. Edwards 1972 London

Grænlendingasaga, trans. M. Magnusson & H. Pálsson 1965 London

'Halldor Snorrason' *Hrafnkel's Saga and other Stories*, trans. H. Pálsson 1971 London, 109-120

Laxdaelasaga, trans. M. Magnusson & H. Pálsson 1969 London

'Ohthere's Account' in Lund. (Ed.) 1984, 18-21

Orkneyingasaga: The History of the Earls of Orkney trans. H. Pálsson and P. Edwards 1978 London

Rimbert *Vita Anskarii*, G. Waitz (ed.) 1884 Hanover
Ansgars Liv. Boken om Ansgar trans. E. Odelman 1986 Stockholm

Rollason, D. W., with D. Gore & G. Fellows-Jensen 1998 *Sources for York History to AD 1100* (A/Y 1) York

Skovgaard-Petersen, I. 1981 'The Written Sources' in M. Bencard (ed.) 1981, 21-62

Snorri Sturlason *Heimskringla*, trans. S. Laing 1844, rev. R. B. Anderson 1889 London

Whitelock, D. (ed.) 1979 *English Historical Documents c. 500-1042*, 1955 2nd edition London

Yngvar's Saga and Eymund's Saga, Vikings in Russia, trans. H. Pálsson and P. Edwards, Edinburgh, 1989

Secondary Sources

Addyman, P. V. 1981 'York' in Milne & Hobley (eds.) 1981, 149

1991 'Lloyds Bank, Pavement' in Addyman and Hall (eds.) 1991, 180-237

Addyman, P. V. & V. E. Black (eds.) 1984 *Archaeological Papers from York presented to M. W. Barley* York

Addyman, P. V. & R. A. Hall 1991 *Urban Structures and Defences, including the Lloyds Bank Excavations* (A/Y 8/3) London

Ambrosiani, B. 1985a 'Specialisation and urbanisation in the Mälaren Valley - a question of maturity' in S-O. Lindquist (ed.) 1985, 103-113

1985b 'Jetties in Birka and Stockholm and the changing water levels in the Mälaren area' in *Conference on Waterfront Archaeology in North European Tonws no. 2 Bergen 1983* Bergen, 66-68

1988 ' The prehistory of towns in Sweden' in Hodges & Hobley (eds.) 1988, 3-68

1992a 'Birka - Kulturhistorisk bakgrund til ett program' in Mikkelson & Larsen (eds.) 1992, 151-154

1992b 'Excavations at Birka 1990-1994: Setting up the Project' in Ambrosiani & Clarke (eds) 1992, 83-87

1997 ' Birka - Stad i Nätverk' in *Amico Amici: Gad Rausing den 19 Mai 1997* Stockholm

Ambrosiani, B., B. Arrhenius, K. Danielsson, O. Kyhlberg, G. Werner 1973 *Birka Svarta Jordens Hamnområde Arkeologisk Undersökning 1970-1971*, Stockholm

Ambrosiani, B. and H. Clarke (eds.) 1992 *Investigations in the Black Earth* Stockholm 1992

1994 *Developments Around the Baltic and the North Sea in the Viking Age, The Twelfth Viking Congress* Stockholm

1995 *Excavations in the Black Earth 1990,* Stockholm

Ambrosiani, B. & B. G. Erikson 1991 *Birka Vikingastaden vol. 1* Stockholm

1992 *Birka Vikingastaden vol. 2* Stockholm

1993 *Birka Vikingastaden vol. 3* Stockholm

1994 *Birka Vikingastaden vol. 4* Stockholm

1996 *Birka Vikingasatden vol. 5* Stockholm

Ambrosiani, K. 1981 *Viking Age Combs, Comb Making and Comb Makers in the Light of Finds from Birka and Ribe* Stockholm

Andersen, H. H., P. J. Crabb & H. J. Madsen 1971 *Århus Søndervold - en byarkæologisk undersøgelse* Copenhagen

Andersson, E. 1996 *Textilproduktion i Arkeologisk Kontext: en metodstudie av yngre järnåldersboplatser i Skåne* Lund

Andersson, H. 1985 *Medeltidsstaden. The medieval Towns Project* Lund

Andrews, P. (ed.) 1997 *Excavations at Hamwic volume 2: excavations at Six Dials* York

Andrén, A. 1985 *Den Urbana Scenen. Städer och samhälle i det medeltida Danmark* Lund

(ed) 1989 *Medeltidens Födelse* Lund

Anon. 1851 'Proceedings at the Meetings of the Archaeological Institute' *The Archaeological Journal vol. VIII*, 414-436

Arbman, H. 1939 *Birka. Sveriges Äldsta Handelsstad* Stockholm

1942 'Sigtunaforskning – ett arbetsprogram' *Situna Dei 1942* 7-23

1943 *Birka I: Die Gräber,* 2 vol., Stockholm

Astill, G. 1985 'Archaeology, Economics and Early Medieval Europe' *Oxford Journal of Archaeology 4(2),* 215-231

Atkin, M. 1985 'Excavations on Alms Lane (site 302N)' in M. Atkin, A. Carter & D. Evans 1985 *Excavations in Norwich 1971-78: Part II* 114-260

1993 'The Norwich Survey 1971-1985: a retrospective view' in Gardiner (ed.) 1993, 127-143

Augustsson, J-E. 1992 'Medeltida husbyggande i Sverige' *Bebyggelsehistorisk tidskrift uppsatser och studier nr 23, 1992,* 55-85

Austin, D. & L. Alcock (eds.) 1990 *From the Baltic to the Black Sea* London

Ayers, B. S. 1993 'The urbanisation of East Anglia: the Norwich perspective' in Gardiner (ed.) 1993, 117-126

1994 *Excavations at Fishergate, Norwich, 1985* Dereham

Bailey, R. 1980 *The Early Christian Church in Leicester and its Region* Leicester

Barley, M. W. (ed.) 1977 *European Towns: Their Archaeology and Early History* London

Barrett, J. C. 1994 *Fragments from Antiquity: An Archaeology of Social Life in Britain c. 2900-1200 BC* Oxford

Bayley, J. 1992 *Non-Ferrous Metalworking from Coppergate* A/Y 17/7 London
1993 'Non-ferrous metalworking' in Rogers 1993, 1232-1235

Becker, C. J., L. Bender Jørgensen, S. Hvass, L. C. Nielsen, T. Skov & I. Stoumann 1980 *Viking-Age Settlements in Western and Central Jutland* Copenhagen

Bencard, M. (ed.) 1981 *Ribe Excavations 1970-76*, vol. 1, Esbjerg

Bencard, M., L. Bender Jørgensen & H. Brinch Madsen (eds) 1990 *Ribe Excavations 1970-1976* (vol. 4), Ribe

Bendixen, K. 1981 'Sceattas and Other Coin Finds' in Bencard (ed.) 1981, 63-101

Benson, G. 1902 'Notes on excavations at 25, 26 and 27 High Ousegate, York' *Yorkshire Philosophical Society Annual Review for 1902*, 64-67
1906 'Notes on an excavation at the corner of Castlegate and Coppergate' *Yorkshire Philosophical Society Annual Review for 1906*, 72-76
1911 *York From its Origin to the End of the Eleventh Century* York

Beronius Jörpeland, L., forthcoming, *Säby* Stockholm

Bertilsson, U. 1982 'Ancient monuments and settlement development in Färentuna hundred. A preliminary analysis of Helgö's hinterland based on the revision of the ancient monument register' in Lundström & Clarke (eds.) 1982, 37-64

Biddle, M. 1976 'The towns' in Wilson (ed.) 1976, 99-150
1984 'London on the Strand' *Popular Archaeology (July 1984)* 23-27

Biddle, M. & B. Kjølbye-Biddle 1992 'Repton and the Vikings' *Antiquity 66*, 36-51

Binford, L. R. 1962 'Archaeology as anthropology' *American Antiquity 28*, 217-25
1965 ' Archaeological systematics and the study of culture process' *American Antiquity 31*, 203-10

Birss, R. & H. Wheeler 1986 'Introduction' in Dool et al. 1986, 7-14

Blindheim, C. 1975a 'Kaupang by the Viks Fjord in Vestfold' in Herteig, Lidén and Blindhiem (eds.) 1975, 125-153

1975b 'Kaupang by the Viks Fjord: harbour, market centre or town?' in Herteig, Lidén and Blindheim (eds.) 1975, 154-174

1992 'Kaupang i relasjon til andre nordiske sentra. Et diskusjonsinnlegg' in Mikkelsen and Larsen (eds.) 1992, 137-149

Blindheim, C. & R. L. Tollnes 1972 *Kaupang: Vikingenes handelsplass* Oslo

Blindheim, C., B. Heyerdahl-Larsen & R. L. Tollnes 1981 *Kaupang-Funnene bind 1*, Oslo

Bourdillon, J. 1994 'The animal provisioning of Saxon Southampton' in Rackham (ed.) 1994, 120-125

Bradley, J. (Ed.) 1984 *Viking Dublin Exposed* Dublin

Briden, C. M. & D. A. Stocker 1987 'The Tower of the Church of St Mary Bishophill Junior' in Wenham et al. 1987, 84-146

Brinklow, D. 1991a 'Anglo-Scandinavian Remains from 8 High Ousegate' in Addyman and Hall (eds.) 1991, 252-252

1991b 'Anglo-Scandinavian Remains from the Parliament Street Sewer and 5-7 Parliament Street' in Addyman and Hall (eds.) 1991, 253-255

Brisbane, M. 1988 'Hamwic (Saxon Southampton): an 8th century port and production centre' in Hodges & Hobley (eds.) 1988, 101-108

(ed.) 1992 *The Archaeology of Novgorod, Russia* Lincoln

Brown, R. A. (ed.) 1983 *Anglo-Norman Studies V* Woodbridge

Buckland, P. C., J. R. A. Grieg, and H. K. Kenward 1974 'York: an Early Medieval site' *Antiquity 48*, 25-33

Buckley, R. & J. Lucas 1987 *Leicester Town Defences: Excavations 1958-1974* Leicester

Byock, J. 1982 *Feud in the Icelandic Saga* London

Bäck, M. 1995 'Importkeramik I Birka' *META 95:1*, 4-21

Bäck M. & M. Carlsson 1994 *S:ta Gertrud 3* Stockholm

Bäck, M. and M.A. MacLeod, forthcoming *Excavation and Recording Methods at Birka, 1990-1995* Stockholm

Callmer, J. 1994 'Urbanization in Scandinavia and the Baltic Region c. 700-1100: Trading Places, Centres & Early Urban Sites' in Ambrosiani & Clarke (eds) 1994, 50-90

Carver, M. O. H. 1993 *Arguments in Stone: Archaeological Research and the European Town in the First Millennium* Oxford

1995 'Roman to Norman at York Minster' in Phillips & Heywood 1995, 177-195

Chapman, J. 1990 'Social Inequality on Bulgarian Tells' R. Samson (ed), 49-92

Childe, V. G. 1925 *The Dawn of European Civilization* London

1931 *Skara Brae: A Pictish Village in Orkney* Oxford

1950 'The Urban Revolution' *The Town Planning Review XXI*, 3-17

1951 *Social Evolution* New York

Christophersen, A. 1989 'Kjøpe, selge, bytte, gi. Vareutveksling og byoppkomst I Norge ca 800-1100: en modell' in Andrén (ed.) 1989, 109-145

Christophersen, A & S. W. Nordeide 1994 *Kaupangen ved Nidelva* Trondheim

Christie, H. 1974 *Middelalderen bygger i tre* Oslo

Clarke, D. L. 1968 *Analytical Archaeology* London

Clarke, H. (ed.) 1979 *Iron and Man in Prehistoric Sweden* Stockholm

Clarke, H. B. 1998 'Proto-Towns and Towns in Ireland and Britain in the Ninth and Tenth Centuries' in Clarke, Ní Mhaonaigh and Ó Floinn (eds.) 1998, 331-380

Clarke, H. & B. Ambrosiani 1991 *Towns in the Viking Age* Leicester

Clarke, H. B., M. Ní Mhaonaigh & R. Ó Floinn (eds) 1998 *Ireland and Scandinavia in the Early Viking Age* Dublin

Clarke, H. B. & A. Simms (eds.) 1985 *The Comparative History of Urban Origins in Non-Roman Europe* London

Clough, T. H. McK., A. Dornier & R. A. Rutland 1975 *Anglo-Saxon and Viking Leicestershire* Leicester

Coll, S. 1991 'Anglo-Scandinavian Features in Lendal' in Addyman and Hall (eds.) 1991, 258-263

Cowie, R. 1987 'Lundenwic: unravelling the Strand' *Archaeology Today 8(5),* 30-34

Cowie, R. & R. Whytehead 1988 'Two middle Saxon occupation sites: excavations at Jubilee Hall and Maiden Lane' *London and Middlesex Archaeological Society 39,* 47-164

1989 'Lundenwic: the archaeological evidence for middle Saxon London' *Antiquity 63,* 706-718

Crumlin-Pedersen, O. 1984 'Ships, navigation and routes in the reports of Ohthere and Wulfstan' in Lund (ed.) 1984, 30-42

Davidan, O. I. 1970 'Contacts between Staraja Ladoga and Scandinavia (on the evidence of archaeological material from Zemljanoe gorodišche)' in Hannestad et al (eds.) 1970, 79-91

Dolley, M. 1965 *Viking Coins of the Danelaw and of Dublin* London

Dolley, R. H. M. 1960 'Coin hoards from the London area' *Transactions of the London and Middlesex Archaeological Society 20 (part 2),* 37-50

Donaghey, S. 1986 '58-9 Skeldergate' in Moulden and Tweddle 1986, 37-47

Donley, L. W. 1982 'House power: Swahili space and symbolic markers' in Hodder (ed.) 1982, 63-73

1990 'A structuring structure: the Swahili house' in Kent (ed.) 1990, 114-126

Dool, J., H. Wheeler et al. 1985 *Roman Derby: Excavations 1968-1983, The Derbyshire Archaeological Journal vol. CV 1985*

Douglas, M. 1978 *Sigtuna. Medeltidsstaden 6* Stockholm

Edwards, N. 1990 *The Archaeology of Early Medieval Ireland* London

Elfwendahl, M. 1989 *Arkeologi på Gotland, Fyra undersökningar i Västergarn* Visby

Ennen, E. 1975 *Das Gewerbe auf dem europäischen zisalpinen Kontinent vom 6. Bis 11. Jahrhundert in verfassungsgeschichtlicher Sicht.* Stockholm

1985 'The early history of the European town: a retrospective view' in Clarke & Simms (eds.) 1985, 3-14

Ericson-Borggren, T. 1993 *Åhus 42:84 m fl, Åhus sn, Fornlämning 35, Skåne: Rapport Arkeologisk*

undersökning mm 1989-91 Kristianstad

Fairclough, G. 1992 'Meaningful constructions - spatial and functional analysis of medieval buildings' *Antiquity 66,* 348 - 366

Faulkner, P. A. 1963 'Castle Planning in the Fourteenth Century' *The Archaeological Journal vol CXX,* 215 - 235

Fell, C. 1978 'Edward King and Martyr and the Anglo-Saxon Hagiographic Tradition' in Hill (ed.) 1978, 1-14

Feveile, C. 1994 'The Latest News from Viking Age Ribe: Archaeological Excavations 1993' in Ambrosiani & Clarke (eds.) 1994, 91-97

Foard, G. 1995 'The Early Topography of Northampton and its Suburbs' *Northamptonshire Archaeology, 26,* 109-122

Foster, S. M. 1989 'Analysis of spatial patterns in buildings (access analysis) as an insight into social structure: examples from the Scottish Atlantic Iron Age' *Antiquity 63,* 40-50

Franklin, S. and J. Shepard 1996 *The Emergence of Rus* 750-1200 London

Fraser, S. M. 1996 *Physical, Social and Intellectual Landscapes in the Neolithic: contextualizing Scottish and Irish megalithic architecture* Dept. of Archaeology, University of Glasgow, PhD. thesis

Frere, S. S. 1978 *Britannia* (revised edition) London

Friedman, J. and M. J. Rowlands 1977 'Notes towards an epigenetic model of the evolution of 'civilisation'' in Friedman and Rowlands (eds.) 1977, 201-278

(eds.) 1977 *The Evolution of Social Systems* London

Gardiner, J. (ed.) 1993 *Flatlands and Wetlands: Current Themes in East Anglian Archaeology, East Anglian Archaeology XXXX* Norwich

Giddens, A. 1984 *The Constitution of Society: Outline of the theory of structuration* Cambridge

Gilmour, B. 1979 'The Anglo-Saxon Church at St Paul-in-the-Bail, Lincoln' *Medieval Archaeology 23,* 214-217

Gilmour, L. A. 1988 *Early Medieval Pottery from Flaxengate, Lincoln* London

Glassie, H. 1975 *Folk Housing in Middle Virginia* Tennessee

Gould, J. 1968 'First preliminary report of the excavations at Tamworth, Staffs. 1967, - the Saxon defences' *Transactions of the Lichfield and South Staffordshire Archaeological and Historical Society IX (1967-68)*

Graves, C. P. 1989 'Social space in the English medieval parish church' *Economy and Society 18*, 297-322

Gray, A. 1995 *Five Letters from an Eastern Empire*

Green, D., C. Haselgrove & M. Spriggs (eds.) 1978 *Social Organisation and Settlement* Oxford

Griffiths, D. W. 1991 *An Archaeological Study of the Lower Dee and Mersey as a Border Area*, Dept. of Archaeology, University of Durham, PhD thesis

Gräslund, A-S. 1980 *BIRKA IV. The Burial Customs. A study of the graves on Björkö* Stockholm

Gustin, I. & G. Rispling forthcoming 'Coins, hack silver and weights from Birka 1990-1995'

Göthberg, H. 1989 'Järnaldershus i sydvästra Uppland' *TOR 22*, 61-78

Hagberg, U. E. 1985 'Ports and trading places on Öland and in the Kalmarsund area' in S-O. Lindquist (ed.) 1985, 139-147

Hall, A. R., H. K. Kenward, D. Williams and J. R. A. Grieg 1983 *Environment and Living Conditions at Two Anglo-Scandinavian Sites* (A/Y 14/4) York

Hall, A. R., A. K. G. Jones, H. K. Kenward & T. P. O'Connor 1992 'The environmental evidence' in Tweddle 1992, 875-880

Hall, R. A. 1978 *Viking Age York and the North* London

1984 *The Viking Dig* London

1984b 'A Late Pre-Conquest Urban Building Tradition' in Addyman & Black (eds.) 1984, 71-77

1986 'Discussion' of '58-9 Skeldergate' in Moulden and Tweddle 1986, 48-52

1987 'St Mary's Church, Castlegate: Observations and Discoveries' in Wenham et al. 1987, 147-176

1989 ' The Five Boroughs of the Danelaw: a review of present knowledge' *Anglo-Saxon*

England 18, 149-206

1990 'Archaeological Introduction' in Mainman 1990, 377-385

1991a ' Structures at 5-7 Coppergate, with a Reassessment of Benson's Observations of 1902' in Addyman and Hall (eds.) 1991, 238-250

1991b 'Anglo-Scandinavian Defences North-East of the Ouse' in Addyman and Hall (eds.) 1991, 264-277

1991c ' Observations in Pavement, 1990' in Addyman and Hall (eds.) 1991, 278-284

1992 'Archaeological Introduction' in Ottaway 1992, 455-463

1994 *Viking Age York* London

1995 'Archaeological Introduction' in Kenward & Hall 1995, 438-446

1997 'Archaeological Introduction' in Rogers 1997

Hallinder, P & K. Haglund 1978 'Iron currency bars in Sweden' in Lamm & Lundström (eds.) 1978, 30-58

Hallinder, P. & J.-E. Tomtlund 1978 'Rod-shaped blanks from Helgö'in Lamm & Lundström (eds.) 1978, 59-80

Hannestad, K., K. Jordal, O. Klindt-Jensen, K. Rahbek Schmidt & C. Stief (eds.) 1970 *Varangian Problems, Scando Slavic Supplementum 1*, Copenhagen

Hansen, L. A. 1996 'Interaction between Northern European sub-arctic Societies during the Middle Ages' in Rindahl (ed.) *Two Studies on the Middle Ages, KULTs skriftserie no. 66,* Oslo, 31-95

Hamilton, J.R.C. 1956 *Excavations at Jarlshof, Shetland* Edinburgh

Haslam, J. (ed.) 1984 *Anglo-Saxon Towns in Southern England* Chichester

1987 'Market and fortress in England in the reign of Offa' *World Archaeology 19, no. l,* 76-93

Hebditch, M. 1967 'A Saxo-Norman Pottery Kiln discovered in Southgate Street, Leicester, 1964' *Transactions of the Leciestershire Archaeological and Historical Society 43,* 4-9

Hedeager, L. 1992 *Iron Age Societies* trans. John Hines, Oxford

Helle, K. 1994 ' Descriptions of Nordic Towns and Town-like Settlements in Early Literature' in Ambrosiani & Clarke (eds.) 1994, 20-31

Henricson, L. G. 1993 'Glass vessels and waste from bead production' in Holmquist-Olausson 1993, 143-147

Herschend, F. 1989 'Changing Houses: Early Medieval House types in Sweden 500 to 1100 A.D.' *TOR 22*, 79-103

Herteig, A. E., H-E. Lidén and C. Blindheim (eds.) 1975 *Archaeological contributions to the early history of urban communities in Norway* Oslo

Hill, D. 1978 'Trends in the development of Towns during the reign of Ethelred II', published in mistake under the title of 'The Declining Reputation of King Aethelred the Unready' in D. Hill (ed.) 1978, 213-226

(ed.) 1978 *Ethelred the Unready: Papers from the Millenary Conference* Oxford

1988 'Unity and diversity - a framework for the study of European towns' in Hodges and Hobley (eds.) 1988, 8-15

Hillier, B. and J. Hanson 1984 *The Social Logic of Space* Cambridge

Hines, J. 1994 'North-Sea trade and the proto-urban sequence' *Archaeologia Polona vol 32*, 7-26

(ed.) 1997 *The Anglo-Saxons from the Migration Period to the Eighth Century: An Ethnographic Perspective*

Hobley, B. 1988 'Lundenwic and Lundenburh: two cities rediscovered' in Hodges & Hobley (eds.) 1988, 69-82

Hodder, I. 1982a *Symbols in Action* Cambridge

(ed.) 1982b *Symbolic and Structural Archaeology* Cambridge

1995 *Theory and Practice in Archaeology* London

Hodges, R. 1982 *Dark Age Economics. The origins of towns and trade AD 600-1000* London

1988 'The rebirth of towns in the early Middle Ages' in Hodges & Hobley (eds) 1988, 1-7

1989 *The Anglo-Saxon Achievement* London

Hodges, R. & B. Hobley (eds.) 1988 *The rebirth of towns in the west AD 700-1050*, London

Hodges, R. & D. Whitehouse 1983 *Mohammed, Charlemagne & the Origins of Europe* London

Holmqvist, W. (ed.) 1961 *Excavations at Helgö I* Stockholm

Holmqvist, W. & B. Arrhenius (eds.) 1964 *Excavations at Helgö II* Stockholm

Holmqvist, W., K. Lamm & A. Lundström (eds.) 1970 *Excavations at Helgö III* Stockholm

Holmqvist, W, with K. Lamm, A. Lundström, J. Waller 1972 *Excavations at Helgö IV. Workshop Part I* Stockholm

Holmquist-Olausson, L. 1993 *Aspects on Birka*, Stockholm

Holt, J. C. (ed.) 1987 *Domesday Studies* Woodbridge

Hope-Taylor, B. 1977 *Yeavering: an Anglo-British Centre of Early Northumbria* London

Horsman, V., C. Milne & G. Milne 1988 *Aspects of Saxo-Norman London, I, Buildings and Street Development* London

Hougen, E. K. 1993 *Kaupang-Funnene Bind IIIB: Bosetningsområdets Keramikk* Oslo

Hvass, S. 1980 'Vorbasse: The Viking-age Settlement at Vorbasse, Central Jutland' in Becker et al. 1980, 137-172

1988 'Jernalderens Bebyggelse' in Mortensen & Rasmussen (eds.) 1988 *Fra Stamme til Stat i Danmark 1: Jernalderens stammesamfund*, Aarhus, 53-92

Hyenstrand, E. 1992 'Early Discoveries in the Black Earth' in Ambrosiani & Clarke (eds.) 1992, 23-51

Hyenstrand, Å. 1979 'Man and Iron Economy in Sweden' in Clarke (ed.) 1979

1981 *Excavations at Helgö VI. The Mälaren Area* Stockholm

Hållans, A-M forthcoming *Valsta* Stockholm

Hållans A-M. & K Svensson forthcoming *Pollista* Stockholm

James, S., A. Marshall & M. Millett 1984 'An Early Medieval Building Tradition' *Archaeological Journal 141*, 182-215

Jankuhn, H. 1972 *Haithabu. Ein Handelsplatz der Wikingerzeit* (1986, 8th ed.), Neumünster

1985 'The interdisciplinary approach to the study of the early history of medieval towns' in Clarke & Simms (eds.) 1985, 15-42

Jansson, I. 1985 *Ovala spännbucklor. En studie av vikingatida standardsmycken med utgångspunkt från Björkö-fynden* Uppsala

Jensen, S. 1991a *The Vikings of Ribe* Ribe

1991b 'Dankirke - Ribe. Fra handelsgård til handelsplads' in Mortensen and Rasmussen (eds.) 1991, 73-88

Johnson, M. 1990 'The Englishman's Home and its Study' in Samson (ed.) 1990, 245-255

Jones, M. J. & R. H. Jones 1981 'Lincoln' in Milne & Hobley (eds.) 1981, 138

Jones, S. 1997 *The Archaeology of Ethnicity* London

Kemp, R. L. 1996 *Anglian Settlement at 46-54 Fishergate* (A/Y 7/1) York

Kent, S. (ed) 1990 *Domestic Architecture and the Use of Space* Cambridge

Kenward, H. K. & A. R. Hall 1995 *Biological Evidence from 16-22 Coppergate* (A/Y 14/7) York

Kenyon, K. M. 1948 *Excavations at the Jewry Wall Site, Leicester* London

Khoroshev, A. S. & A. N. Sorrokin 1992 'Buildings and Properties from the Lyudin End of Novgorod' in Brisbane (ed.) 1992, 107-159

Kilmurray, K. 1977 'The production of red-painted pottery at Stamford, Lincs.' *Mediaeval Archaeology XXI,* 180-186

Kjølbye-Biddle, B. 1995 'Iron-bound coffins and coffin-fittings from the pre-Norman cemetery' in Phillips & Heywood 1995, 489-521

Knirk, J. E. (ed.) 1987 *Proceedings of the Tenth Viking Congress, Larkollen, Norway, 1985* Oslo

Komber, J. 1989 *Jernalderens Gårdshus: en bygningsteknisk analyse* Stavanger

Kossinna, G. 1911 *Die Herkunft der Germanen* Leipzig

Kyhlberg, O. 1980 *Helgö och Birka. Kronologisk-topografisk analys av grav-och boplatsmaterial* Stockholm

1982 'Chronological and topographical analysis of the cemeteries and settlements' in Lundström & Clarke (eds.) 1982, 13-36

Lamm, K. 1970 'Summary concerning cemetery 150: Archaeological Analysis' in Holmqvist (ed.) 1970, 217-227

1982 'The character and function of the settlement' in Lundström & Clarke (eds.) 1982, 1-6

Lamm, K., A. Lundström & H. Clarke (eds.) 1978 *Excavations at Helgö V:I. Workshop. Part II* Stockholm

Lang, J. 1995 'Pre-Conquest sculpture' in Phillips & Heywood 1995, 433-467

Lévi-Strauss, C. 1967 *Structural Anthropology* New York

Lindquist, S-O & B. Radhe 1985 *Society and trade in the Baltic during the Viking Age* Visby

Lund, N. (ed.) 1984 *Two Voyagers at the Court of King Alfred* York

Lundström, A. 1970 'Find Frequency' in Holmqvist et al. 1970, 129-146

1981 'Survey of the glass from Helgö' in Lundström & Clarke (eds.) 1981, 1-38

(ed.) 1988 *Thirteen Studies on Helgö* Stockholm

Lundström, A. & H. Clarke (eds.) 1981 *Excavations at Helgö VII. Glass - Iron - Clay* Stockholm

1982 *Excavations at Helgö VIII. The Ancient Monument* Stockholm

Lundström, P. 1981 *De kommo vida... Vikingars hamn vid Paviken på Gotland* Uddevalla

McDonnell, J. G. 1993 'Ironworking residues' in Rogers 1993, 1224-1228

McDonnell, J. & P. Ottaway 1992a 'Chronological and spatial distribution of slag' in Ottaway 1992, 476-480

1992b 'The smithing process' in Ottaway 1992, 480-486

MacGregor, A. 1982 *Anglo-Scandinavian Finds from Lloyds Bank, Pavement, and Other Sites* (A/Y 17/3) York

Mahany, C. 1977 'Excavations at Stamford Castle 1971-1976' *Chateau Gaillard: Études de castellogie médiéval 8,* 223-245

Mahany, C., A. Burchard & G. Simpson 1982 *Excavations in Stamford, Lincolnshire 1963-1969* London

Mahany, C. & D. Roffe 1983 'Stamford: the Development of an Anglo-Scandinavian Borough' in Brown (ed.) 1983, 197-219

Mainman, A. J. 1990 *Anglo-Scandinavian Pottery from Coppergate* (A/Y 16/5) York

Malmer, B. 1990 'What does coinage tell us about Scandinavian society in the Late Viking Age?' in Austin & Alcock (eds.) 1990, 157-167

1985 'Circulation of monetary silver in the Baltic Area during the Viking Age' in Lindquist & Radhe (eds.) 1985, 185-194

Mann, J. E. 1982 *Early Medieval Finds from Flaxengate I: Objects of antler, bone, stone, horn, ivory, amber, and jet* London

Margeson, S. 1997 *The Vikings in Norfolk* Norwich

Messenius, J. 1612, *Sveopentaprotopolis, thet är the fem förnämste och älste Sweriges och Götes hufvudstäder, såsom äro Ubsala, Sigtuna, Scara, Biörcköö och Stockholm* Stockholm

Mikkelsen, E. & J. H. Larsen (eds.) 1992 *Økonomiske og politiske sentra i Norden (Åkerseminariet)* Oslo

Milne, G. 1993 *Timber Building Techniques in London c. 900-1400* London

Milne, G. & B. Hobley (eds.) 1981 *Waterfront Archaeology in Britain and Northern Europe* London

Moore, H. 1986 *Space, Text and Gender* Cambridge

Morris, C. D 1977 'Northumbria and the Viking settlement: the evidence for land-holding' in *Archaeologia Aeliana V* 81-104

Mortensen, P. & B. M. Rasmussen (eds.) 1988 *Fra Stamme til Stat i Danmark 1: Jernalderens stammesamfund* Højbjerg

Morton, A. D. (ed.) 1992 *Excavations at Hamwic Volume 1: excavations 1946-83 excluding Six Dials and Melbourne Street* London

Moulden, J. & D. Tweddle 1986 *Anglo-Scandinavian Settlement South-west of the Ouse* (A/Y 8/1) London

Munch, G. S., O. S. Johansen & I. Larsen 1987 'Borg in Lofoten. A chieftain's farm in arctic Norway', in Knirk (ed.) 1987, 149-170

Munch, G. S., I. Larssen, & O. S. Johansen 1986 'A chieftain's farm at Borg, Lofoten, N. Norway'

Medieval Archaeology XXX, 88-91

Musty, J. 1982 'The Pottery Industry: a commentary' in Mahany, Burchard & Simpson 1982, 10-11

Myhre, B., B. Stoklund & P. Gjaerder (eds.) 1982 *Byggeskikk gjennom to tusen år* Stavanger

Oakey, N. 1991 'Discussion' in P. V. Addyman 'Lloyds Bank, Pavement' in Addyman & Hall (eds.) 1991 *Urban Structures and Defences* (A/Y 8/3), 228-236

O'Brien, E. 1988 'The Location and Context of Viking Burials at Kilmainham and Islandbridge, Dublin' in Clarke, Ní Mhaonaigh & Ó Floinn (eds.) 1988, 203-221

O'Connor, T. P. 1989 *Bones from Anglo-Scandinavian Levels at 16-22 Coppergate* (A/Y 15/3) York
1994 '8th-11th century economy and environment in York' in Rackham (ed.) 1994, 136-147

Ohlsson, T. 1976 'The Löddeköpinge Investigation I. The Settlement at Vikhögsvägen' *Meddelanden från Lunds Universitets Historiska Museum 1975-1976*

Ottaway, P. 1992 *Anglo-Scandinavian Ironwork from 16-22 Coppergate* (A/Y 17/6) York

Parker, M. S. 1987 'Some Notes on the Pre-Norman History of Doncaster' *The Yorkshire Archaeological Journal, vol. 59*, 29-44

Pearson, N. F. 1992 'The Watching Brief', in Tweddle 1992, 863-870

Perring, D. 1981 *Early Medieval Occupation at Flaxengate Lincoln* London

Petterson, B. 1993 *Stratigrafisk analys och bebyggelsestratigrafi i det tidigmedeltida Sigtuna* Stockholm

Phillips, D. & B. Heywood 1995a *Excavations at York Minster: Volume 1 From Roman fortress to Norman cathedral: Part 1 The site* London
1995b *Excavations at York Minster: Volume 1 From Roman fortress to Norman cathedral: Part 2 The finds* London

Pirenne, H. 1992 *Mohammed and Charlemagne* (1939) trans. Bernard Miall, New York

Polanyi, K 1969 *Primitive, archaic and modern economics: essays of Karl Polanyi* New York

Price, N. 1994 'Acts of Identity? Ethnicity and Architecture in the Viking Age' *META*, 49-71

Rackham, J. (ed.) 1994 *Environment and Economy in Anglo-Saxon England* York
1994 'Economy and environment in Saxon London' in Rackham (ed.) 1994, 126-135

Rackham, D. J. 1995 'Animal bone from post-Roman contexts' in Phillips & Heywood 1995, 533-555

Radford, C. A. R. 1976 'The Church of St Alkmund, Derby' *The Derbyshire Archaeological Journal XCVI*, 26-61

Radley, J. 1971 'Economic Aspects of Anglo-Danish York' *Medieval Archaeology XV*, 37-57
1972 'Excavations in the defences of the City of York: an Early Mediaeval stone tower and the successive earth ramparts' *The Yorkshire Archaeological Journal 44*, 38-64

Randsborg, K. 1980 *The Viking Age in Denmark* London
1988 'Byen, Magten og Jorden: Europa i det første årtusind' in Mortensen & Rasmussen (eds.) 1988, 9-18

Rapoport, A. (ed.) 1976 *The Mutual Interaction of People and Their Built Environment* Paris
1990 'Systems of activities and systems of settings' in Kent (ed.) 1990, 9-20

RCHM(E) Royal Commission on Historical Monuments (England) 1962-1981 *An Inventory of the Historical Monuments in the City of York vols. 1 - 5* London

Reisborg, S. 1981a 'The pottery from Building Group 4' in Lundström & Clarke (eds.) 1981, 107-134
1981b 'The pottery from Building Group 3' in Lundström & Clarke (eds.) 1981, 135-176
1982 'Spatial and chronological extent of the settlement' in Lundström & Clarke (eds.) 1982, 7-12

Renaud, J. G. N. (ed) 1968 *Rotterdam Papers, A contribution to medieval archaeology*, Rotterdam

Renfrew, A. C. 1972 *The Emergence of Civilisation: the Cyclades and the Aegean in the Third Millennnium B.C.* London
1973 (ed.) *The Explanation of Culture Change: Models in Prehistory* London
1979 *Problems in European Prehistory* Cambridge

Reynolds, S. 1977 *An Introduction to the History of English Medieval Towns* Oxford
1987 'Towns in Domesday Book' in Holt (ed.) 1987, 295-310

Richards, C. 1990 'The Late Neolithic House in Orkney' in Samson (ed.) 1990, 111-124

Richardson, K. M. 1959 'Excavations in Hungate, York' *The Archaeological Journal CXVI,* 51-114

Rindahl, M. (ed.) 1996 *Two Studies on the Middle Ages, KULTs skriftserie No. 66* Oslo

Ringstedt, N 1997 *The Birka Chamber Graves: Economic and Social Aspects,* Stockholm

Rogers, A. 1972 'Parish Boundaries and Urban History' the *Journal of the British Archaeological Association, 3rd series, 35,* 46-64

Rogers, N. S. H. 1993 *Anglian and Other Finds from 46-54 Fishergate* (A/Y 17/9) York

Rogers, P. W. 1997 *Textile Production at 16-22 Coppergate* (A/Y 17/11) York

Sahlins, M 1974 *Stone Age Economics* London

Samson, R. (ed.) 1990 *The Social Archaeology of Houses* Edinburgh

Sanders, D. 1990 'Behavioural conventions and archaeology: methods for the analysis of ancient architecture' in Kent (ed.) 1990, 43-72

Schia, E. 1979 &c. *De Arkeologiske Utgravninger I Gamlebyen, Oslo* Oslo

Schietzel, K. 1976 *Die archäologischen Befunde der Ausgrabung Haithabu 1963-1964, Berichte über die Ausgrabungen in Haithabu,* Bericht 1, Neumünster

1981 *Stand der siedlungsarchäologischen Forschung in Haithabu - Ergebnisse und Probleme, Berichte über die Ausgrabungen in Haithabu,* Bericht 16, Schleswig

1985 'Haithabu: a study on the development of early urban settlements in Northern Europe' in Clarke & Simms (eds.) 1985, 147-181

Scull, C. 1997 'Urban Centres in Pre-Viking England?' in Hines (ed.) 1997, 269-310

Selling, D. 1945 *Alexander Seton (1768-1828) som Fornforskare* Stockholm

1955 *Wikingerzeitliche und Frümittelalterliche Keramik in Schweden* Stockholm

Shanks, M. & C. Tilley 1987 *Social Theory and Archaeology* Cambridge

Shaw, M. 1985 'Excavations on a Saxon and Medieval site at Black Lion Hill, Northampton' *Northamptonshire Archaeology 20,* 113-138

Sjöberg, A. 1985 'Orthodoxe Mission in Schweden im 11. Jahrhundert?' in Lindquist & Radhe (eds)

1985, 69-78

Smyth, A.P. 1976 'The *Black* Foreigners of York and the *White* Foreigners of Dublin' *Saga-Book vol XIX, parts 2-3, 1975-1976,* 101-117

1977 *Scandinvian Kings in the British Isles 850-880* Oxford

1987 *Scandinavian York and Dublin,* 2 vols., Dublin

Steane, K. and A. Vince 1993 'Post-Roman Lincoln: Archaeological Evidence for Activity in Lincoln from the Fifth to the Ninth Centuries' in Vince (ed.) 1993, 71-77

Steedman, K., T. Dyson & J. Schofield 1992 *Aspects of Saxo-Norman London: III The Bridgehead and Billingsgate to 1200* London

Stenton, F. M. 1927 'Lindsay and its Kings' *Essays in History Presented to Reginald Lane Poole* Oxford, 136-150

1971 *Anglo-Saxon England* 3rd edition, Oxford

Steuer, H. 1969 'Zur statistischen Auswertung des Gräberfeldes von Birka' *Neue Ausgrabungen under Forschungen in Niedersachsen 4* Hildesheim, 212-218

1974 *Die Südsiedlung von Haithabu* Neumünster

Stiesdal, H. 1968 'An excavation in the town of Ribe, Denmark' in Renaud (ed.) 1968, 155-160

Stjerna, K. 1908 'Lund och Birka' *Historisk tidskrift för Skåneland 3,* 171-225

Stolpe, H. 1873 'Naturhistoriska och archaeologiska undersökningar på Björkö i Mälaren' *Öfversigt af Kongliga Vetenskaps Akademiens Förhandlingar, 1873, no. 5* Stockholm

Svensson, K. 1987 'Sigtuna under sen vikingatid' *Populär Arkeologi nr 1*

Tesch, S. 1990 *Makt och människor I Kungens Sigtuna. Sigtunautgrävningen 1988-90,* Sigtuna

Thomas, C. 1981 *Christianity in Roman Britain to AD 500* London

Thorsteinsson, A. 1982 'Faerøske huskonstruktioner fra vikingetid til 1800-årene' in Myhre et al. (eds.) 1982, 149-162

Tollnes, R. L. 1969 'Bygningsrester fra Kaupang' *Viking XXXIII* Oslo

Trigger, B. 1989 *A History of Archaeological Thought* Cambridge

Tweddle, D. 1992 *The Anglian Helmet from Coppergate* (A/Y 17/8) York

Verwers, W. J. H. 1988 'Dorestad: a Carolingian town?'in Hodges and Hobley (eds.) 1988, 52-56

Vince, A. 1984 'The Aldwych: mid-Saxon London discovered?' *Current Archaeology 8(4)*, 310-312
1990 *Saxon London: An Archaeological Investigation* London
(ed.) 1991 *Aspects of Saxo-Norman London: 2 Finds and Environmental Evidence* London
1993 'A tale of two cities: Lincoln and London compared' in Gardiner (ed.) 1993, 152-170
1994 'Saxon urban economies: an archaeological perspective' in Rackham (ed.) 1994, 108-119

Vince, A. (ed.) 1993 *Pre-Viking Lindsey*, Lincoln

Wade, K. 1988 'Ipswich' in Hodges & Hobley (eds.) 1988, 93-100
1993 'The Urbanisation of East Anglia: the Ipswich Perspective' in Gardiner (ed.) 1993, 144-151

Wainwright, F. T. 1975 *Scandinavian England, Collected Papers* H. P. R. Finberg (ed.)

Wallace, P. F. 1984 'A Reappraisal of the Archaeological Significance of Wood Quay' in J. Bradley (ed.) 1984 *Viking Dublin Exposed: the Wood Quay Saga* Dublin, 112-133
1985 'The Archaeology of Viking Dublin' in Clarke and Simms (eds.) 1985, 103-145
1992 *The Viking Age Buildings of Dublin* Dublin

Waller, J. & P. Hallinder 1970 'Cemetery 150' in Lundqvist (ed.) 1970, 160-216

Walton, P. 1989 *Textiles, Cordage and Raw Fibre from 16-22 Coppergate* (A/Y 17/5) York

Waterman, D. M. 1959 'Late Saxon, Viking, and Early Medieval Finds from York' *Archaeologia XCVII*, 59-105

Wellbeloved, C. 1842 *Eburacum: York under the Romans* York

Wenham, L.P., R. A. Hall, C. M. Briden & D. A. Stocker 1987 *St Mary Bishophill Junior and St Mary Castlegate* (A/Y 8/2) London

Wenham, L. P. & R. A. Hall 1987 'St Mary Bishophill Junior: Excavation to the North of the Church' in Wenham et al. 1987, 75-83

Westholm, G. 1985 'The settlement at Vi, at the foot of the cliff' in Lindquist & Radhe (eds) 1985, 293-303

Wheeler, H. 1986a 'North-West Sector Excavations 1979-80' in Dool, Wheeler et al., 38-153
1986b 'Conclusion: The Development of Roman Derby' Dool, Wheeler et al., 300-304

Whitelock, D. 1959 'The Dealings of the kings of England with Northumbria in the Tenth and Eleventh Centuries' in P. Clemoes (ed.) 1959 *The Anglo-Saxons* 70-88 London

Whytehead, R. & R. Cowie 1989 *Excavations at Peabody Buildings and National Gallery, London and Middlesex Archaeological Society 40*

Wigh, B. 1996 'Animal Bone from the Viking Town of Birka, Sweden', in *Anthropozoologica* Paris (details not available)

Wigren, S. & K. Lamm *1974 Excavations at Helgö IX. Finds, Features and Functions* Stockholm

Williams, F. 1979 'Excavations on Marefair, Northampton, 1977' *Northamptonshire Archaeology, 14,* 38-79

Williams, J. H. 1974 'A Saxo-Norman Kiln Group from Northampton' *Northamptonshire Archaeology 9,* 46-55
1979 *St Peter's Street Northampton, Excavations 1973-1976* Northampton
1984 'From 'palace' to 'town': Northampton and urban origins' *Anglo-Saxon England 13,* 113-137

Williams, J. H. and D. Farwell 1983 'Excavations on a Saxon site in St James' Square, Northampton, 1981' *Northamptonshire Archaeology 18,* 141-152

Williams, J. H. and M. Shaw 1981 'Excavations in Chalk Lane, Northampton, 1975-78' *Northamptonshire Archaeology 16,* 87-135

Williams, J. H., M. Shaw and V. Denham 1985 *Middle Saxon Palaces at Northampton* Northampton

Wilson, D. M. (ed.) 1976 *The Archaeology of Anglo-Saxon England* London

Young, C. S. B. 1970 'Excavations in Nottingham' *Transactions of the Thoroton Society of Nottinghamshire 74,* 1-2
1971 'Excavations in Nottingham' *Transactions of the Thoroton Society of Nottinghamshire 75,* 1-2

1972 'Excavations in Nottingham' the *Transactions of the Thoroton Society of Nottinghamshire 76,* 1-3

Zachrisson, T. 1992 'Silver and Gold Hoards from the Black Earth' Ambrosiani & Clarke (eds), 52-63

Zeitler, R. (ed.) 1981 *Les pays du nord et Byzance (Scandinavie et Byzance), Actes du colloque nordique et international de byzantinologie tenu à Upsal 20-22 avril 1979* Uppsala